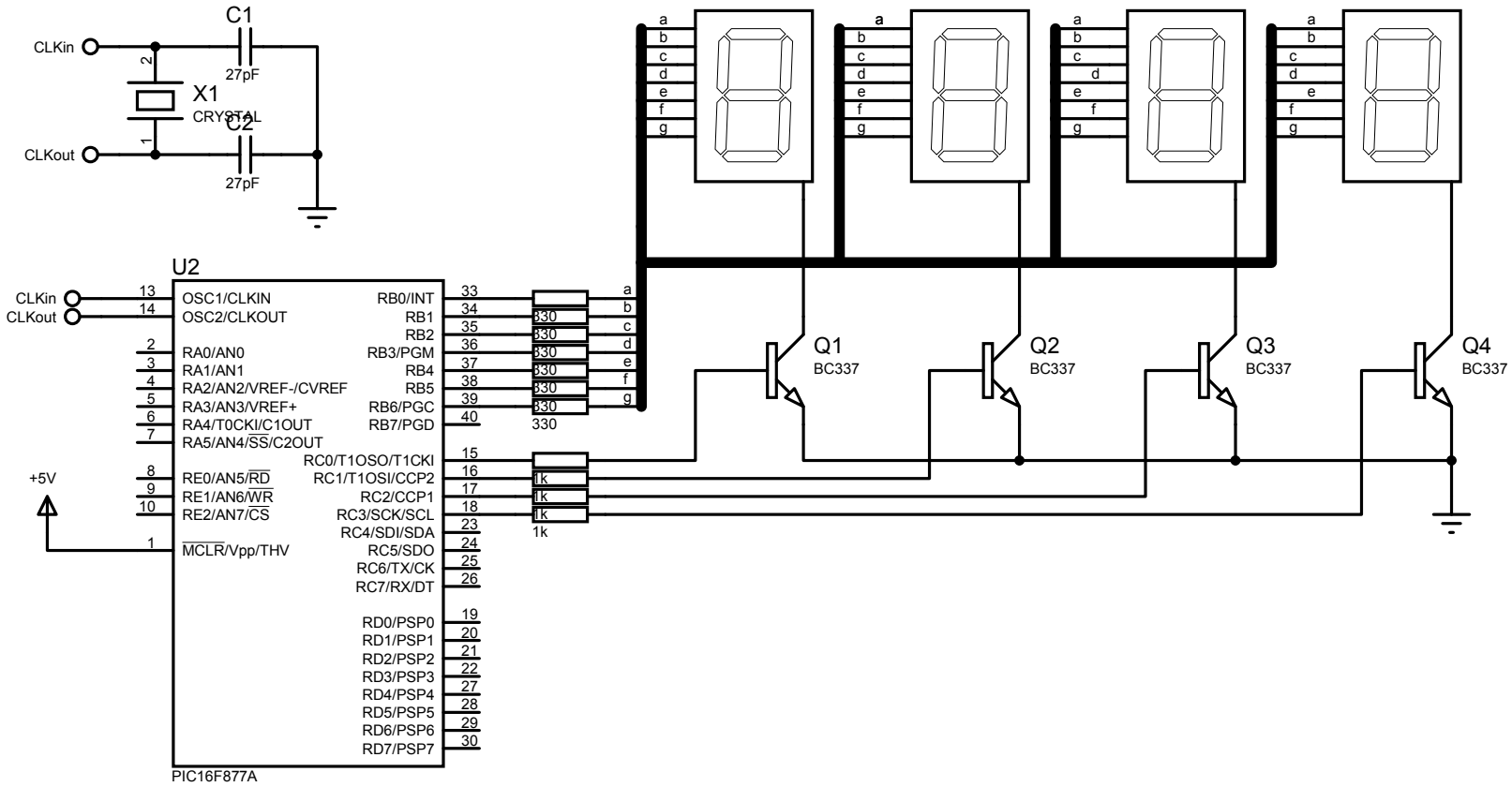

FILE NAME: MicrochipDisplay7Segmentos.pdsprj	DATE: 23/09/2017
DESIGN TITLE: MicrochipDisplay7Segmentos.pdsprj	PAGE: 1 of 3
PATH: C:\DADOS\projeto\MicrochipPicDisplay7Segmentos\Simulacao\	
BY: @AUTHOR REV:@REV	TIME: 17:52:27