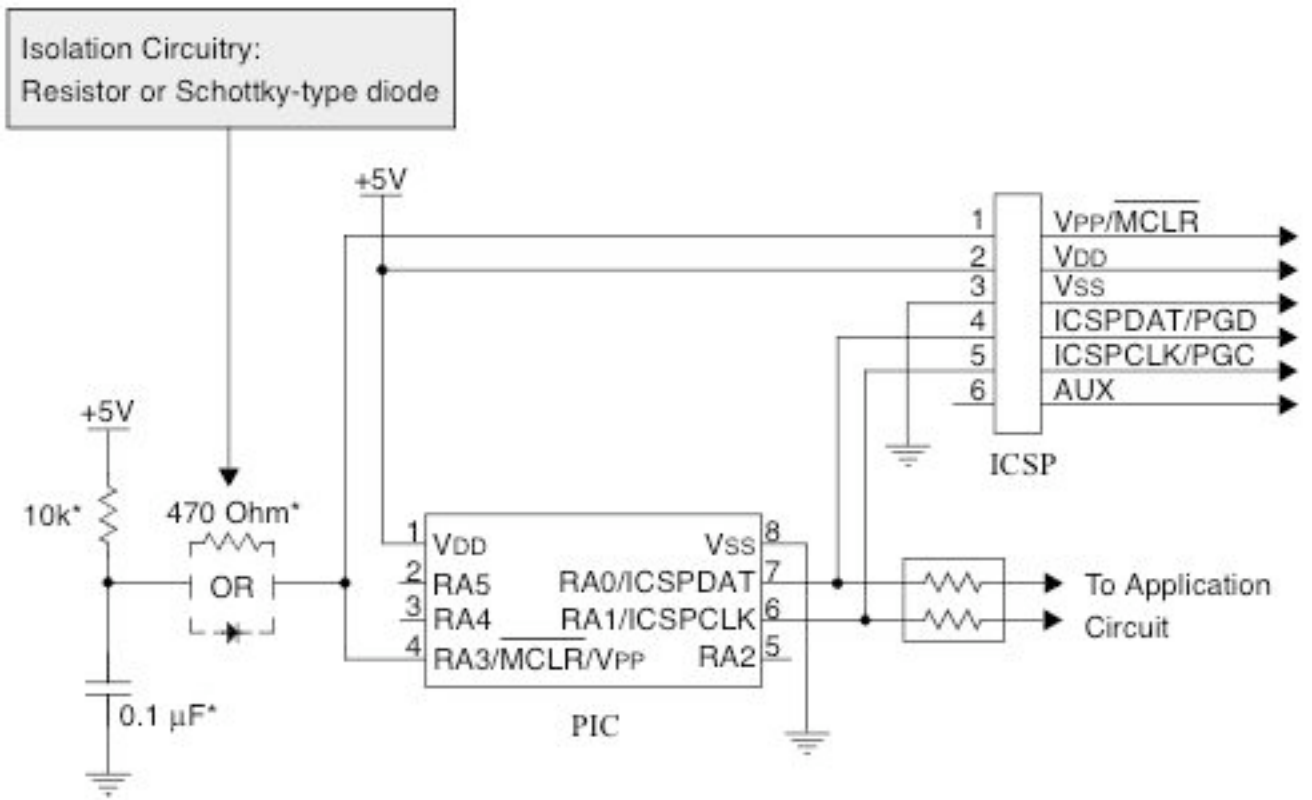

* Typical Values