USER MANUAL & REFERENCE

Geo MACRO Drive

Direct PWM Amplifier over MACRO

500-603701-xUxx

December 8, 2009

Copyright Information

© 2009 Delta Tau Data Systems, Inc. All rights reserved.

This document is furnished for the customers of Delta Tau Data Systems, Inc. Other uses are unauthorized without written permission of Delta Tau Data Systems, Inc. Information contained in this manual may be updated from time-to-time due to product improvements, etc., and may not conform in every respect to former issues.

To report errors or inconsistencies, call or email:

Delta Tau Data Systems, Inc. Technical Support
Phone: (818) 717-5656
Fax: (818) 998-7807
Email: support@deltatau.com
Website: http://www.deltatau.com

Operating Conditions

All Delta Tau Data Systems, Inc. motion controller products, accessories, and amplifiers contain static sensitive components that can be damaged by incorrect handling. When installing or handling Delta Tau Data Systems, Inc. products, avoid contact with highly insulated materials. Only qualified personnel should be allowed to handle this equipment.

In the case of industrial applications, we expect our products to be protected from hazardous or conductive materials and/or environments that could cause harm to the controller by damaging components or causing electrical shorts. When our products are used in an industrial environment, install them into an industrial electrical cabinet or industrial PC to protect them from excessive or corrosive moisture, abnormal ambient temperatures, and conductive materials. If Delta Tau Data Systems, Inc. products are directly exposed to hazardous or conductive materials and/or environments, we cannot guarantee their operation.

Safety Instructions

Qualified personnel must transport, assemble, install, and maintain this equipment. Properly qualified personnel are persons who are familiar with the transport, assembly, installation, and operation of equipment. The qualified personnel must know and observe the following standards and regulations:

IEC 364 resp. CENELEC HD 384 or DIN VDE 0100
IEC report 664 or DIN VDE 0110
National regulations for safety and accident prevention or VBG 4

Incorrect handling of products can result in injury and damage to persons and machinery. Strictly adhere to the installation instructions. Electrical safety is provided through a low-resistance earth connection. It is vital to ensure that all system components are connected to earth ground.

This product contains components that are sensitive to static electricity and can be damaged by incorrect handling. Avoid contact with high insulating materials (artificial fabrics, plastic film, etc.). Place the product on a conductive surface. Discharge any possible static electricity build-up by touching an unpainted, metal, grounded surface before touching the equipment.

Keep all covers and cabinet doors shut during operation. Be aware that during operation, the product has electrically charged components and hot surfaces. Control and power cables can carry a high voltage, even when the motor is not rotating. Never disconnect or connect the product while the power source is energized to avoid electric arcing.

After removing the power source from the equipment, wait at least 10 minutes before touching or disconnecting sections of the equipment that normally carry electrical charges (e.g., capacitors, contacts, screw connections). To be safe, measure the electrical contact points with a meter before touching the equipment.

The following text formats are used in this manual to indicate a potential for personal injury or equipment damage. Read the safety notices in this manual before attempting installation, operation, or maintenance to avoid serious bodily injury, damage to the equipment, or operational difficulty.

WARNING

A Warning identifies hazards that could result in personal injury or death. It precedes the discussion of interest.

Caution

A Caution identifies hazards that could result in equipment damage. It precedes the discussion of interest

Note

A Note identifies information critical to the user's understanding or use of the equipment. It follows the discussion of interest.

REVISION HISTORY				
REV.	**DESCRIPTION**	**DATE**	**CHG**	**APPVD**
1	UPDATED ENDAT SETUP INFO, P. 82	07/18/06	CP	P.SHANTZ
2	UPDATED ERROR CODE EF GATE DRIVE INFO	09/21/06	CP	P.SHANTZ
3	CORRECTED GP OUT INPUT FUNCTIONS, P. 39	06/11/08	CP	K.ZHAO
4	CORRECTED RESET COMMAND, P. 138	10/30/08	CP	S. MILICI
5	CORRECTED M-VARIABLE DEFINITIONS, P. 87	12/08/09	CP	S. MILICI

Table of Contents

Copyright Information i
Operating Conditions i
Safety Instructions i

INTRODUCTION 1
User Interface 1
Geo MACRO Drives 1
Geo PMAC Drives 2
Geo Direct-PWM Drives 2
MACRO Defined 2
Feedback Devices 3
Compatible Motors 3
Maximum Speed 3
Torque 3
Motor Poles 4
Motor Inductance 4
Motor Resistance 4
Motor Back EMF 4
Motor Torque Constant 5
Motor Inertia 5
Motor Cabling 5

SPECIFICATIONS 7
Part Number 7
Geo MACRO Feedback Options 8
Package Types 8
Electrical Specifications 9
230VAC Input Drives 9
480VAC Input Drives 11
Environmental Specifications 13
Recommended Fusing and Wire Gauge 13

RECEIVING AND UNPACKING 15
Use of Equipment 15

MOUNTING 17
Low Profile 18
Single Width 19
Double Width 20

CONNECTIONS 21
System (Power) Wiring 21
Wiring AC Input, J1 23
Wiring Earth-Ground 23
Wiring 24 V Logic Control, J4 24
Wiring the Motors 24
J2: Motor 1 Output Connector Pinout 24
J3: Motor 2 Output Connector Pinout 24
Wiring the Motor Thermostats 25
Wiring the Regen (Shunt) Resistor, J5 25
J5: External Shunt Connector Pinout 26
Shunt Regulation 27
Minimum Resistance Value 27
Maximum Resistance Value 27
Energy Transfer Equations 27
Bonding 29
Filtering 30

CE Filtering *30*
Input Power Filtering *31*
Motor Line Filtering *31*
I/O Filtering *31*
Connecting Main Feedback Sensors (X1 & X2) 32
Digital Quadrature Encoders *32*
Digital Hall Commutation Sensors *33*
SSI Encoders *33*
Sinusoidal Encoders *34*
Hiperface® Interface *35*
EnDat Interface *36*
Resolvers *37*
Connecting Secondary Quad. Encoders (X8 & X9) 38
Connecting General Purpose I/O & Flags (X3) 39
Sample wiring the I/O *39*
Sample Wiring the Flags *40*
Connecting MACRO Ring 41
Fiber Optic MACRO connections (X5) *41*
RJ-45 Copper MACRO connections (X10 &X11) *41*
Connecting optional Analog Inputs (X6 & X7) 42

SOFTWARE SETUP FOR GEO MACRO DRIVES 43
Introduction 43
Establishing MACRO Communications with Turbo PMAC 43
MACRO Ring Frequency Control Variables *43*
I7: Phase Cycle Extension *43*
I6840: MACRO IC 0 Master Configuration *44*
I6890/I6940/I6990: MACRO IC 1/2/3 Master Configuration *44*
I6841/I6891/I6941/I6991: MACRO IC 0/1/2/3 Node Activation Control *44*
I70/I72/I74/I76: MACRO IC 0/1/2/3 Node Auxiliary Function Enable *45*
I71/I73/I75/I77: MACRO IC 0/1/2/3 Node Protocol Type Control *46*
I78: MACRO Master/Slave Auxiliary Communications Timeout *46*
I79: MACRO Master/Master Auxiliary Communications Timeout *46*
I80, I81, I82: MACRO Ring Check Period and Limits *46*
MACRO Node Addresses *47*
Using the Turbo PMAC Setup Program *51*
Using the PEWIN32PRO 2 MACRO Ring ASCII Feature *58*
PEWIN32PRO Suite 2 MACRO Status window *62*
Ring Order Communications Method *63*
MACRO ASCII Communications *64*
How to Enable and Disable MACRO ASCII Communication Mode *64*

SETTING UP PRIMARY FEEDBACK 67
Device Selection Control 67
Setting up Digital Quadrature Encoders 67
Setting up SSI Encoders 67
Setting up Sinusoidal Encoders 69
Principle of PMAC Interpolation Operation *69*
Setting up Endat 72
Setting up Resolvers 72
Setting up the Phase Shift (MI941) Manually *73*
Setting up the Resolver for Power-On Absolute Position *73*
Scaling the Feedback Units *74*

SETTING UP SECONDARY ENCODERS 75

SETTING UP THE TURBO PMAC CONVERSION TABLE 77

SETTING UP TURBO MOTOR OPERATION 79
Turbo PMAC Basic Setup for Brushless Servo or Induction Motor 79
Turbo PMAC Basic Setup for DC Brush Motors 80
Instructions for Direct-PWM Control of Brush Motors 85
PWM/ADC Phase Match 85
Synchronous Motor Stepper Action 85
Current Loop Polarity Check 85
Troubleshooting 86
Testing PWM and Current Feedback Operation 86
Purpose 86
Preparation 87
Position Feedback and Polarity Test 87
Setting Up Hall Commutation Sensors 88
Signal Format 88
Using Hall Effect Sensors for Phase Reference 89
Determining the Commutation Phase Angle 89
Finding the Hall Effect Transition Points 89
Calculating the Hall Effect Zero Point (HEZ) 90
Determining the Polarity of the Hall Effects – Standard or Reversed 92
Software Settings for Hall Effect Phasing 92
Setting I^2T Protection 96
Calculating Minimum PWM Frequency 97

SETTING UP DISCRETE INPUTS AND OUTPUTS 99
Inputs and Outputs 99
Ring Break Output indicator MS{node},MI13 100
Setting up the Analog Inputs (X6 and X7) 100
Limit and Flag Circuit Wiring 102
Connecting Limits/Flags to the Geo Drive 102
Setting up Position Compare (EQU) Outputs 103
Setting up for a Single Pulse Output 103
Setting up for Multiple Pulse Outputs 104

CONNECTORS 105
Connector Pinouts 105
X1: Encoder Input 1 105
X2: Encoder Input 2 106
X3: General Purpose I/O 107
X4: Safety Relay (Optional) 108
X6: Analog IN 1 (Optional 3/4/5) 108
X7: Analog IN 2 (Optional 3/4/5) 108
X8: S. Encoder 1 109
X9: S. Encoder 2 109
X13: Discrete I/O 109
J1: AC Input Connector Pinout 110
J2: Motor 1 Output Connector Pinout 110
J3: Motor 2 Output Connector Pinout (Optional) 110
J4: 24VDC Input Logic Supply Connector 110
J5: External Shunt Connector Pinout 110
MACRO Link Connectors 111
X5: MACRO I/O, MACRO Fiber Optic Transceiver (Optional) 111
X10 and X11 MACRO RJ-45 Copper Connectors 111
USB Connector 111
X12: USB Universal Serial Bus Port 112

TROUBLESHOOTING 113
Error Codes 113

D1: Geo MACRO Drive Status Display Codes *113*
MACRO Network Errors *114*
Status LEDs *115*
Geo MACRO Drive Ring Status Error Codes 116
MS{node},MI4 Geo MACRO Status Word (Read Only) *116*
MS{node},MI6 Status Word Control *117*
Status Word *117*

TURBO PMAC2 RELATED I-VARIABLE REFERENCE 119
Ixx10: Motor xx Power-On Servo Position Address 119
Ixx25, Ixx24: Flag Address and Mode 121
Ixx70, Ixx71: Commutation Cycle Size 123
Ixx72: Commutation Phase Angle 123
Ixx75: Absolute Phase Position Offset 123
Ixx81: Motor xx Power-On Phase Position Address and Mode 124
Ixx82: Current Loop Feedback Address 125
Ixx83: Commutation Feedback Address 126
Ixx91: Motor xx Power-On Phase Position Format 126
Ixx95: Motor xx Power-On Servo Position Format 129
Ixx97 Motor xx Position Capture and Trigger Mode 131

GEO MACRO DRIVE MI-VARIABLE REFERENCE 133
Global MI-Variables 133
MS{node},MI0 Geo MACRO drive Firmware Version (Read Only) *133*
MS{node},MI1 Geo MACRO drive Firmware Date (Read Only) *133*
MS{node},MI2 and MI3 (Reserved for future use) *133*
MS{node},MI4 Geo MACRO drive Status Word (Read Only) *134*
MS{node},MI5 Ring Error Counter *134*
MS{node},MI6 Status Word Control *135*
MS{node},MI7 Geo MACRO Error Counter *135*
MS{node},MI8 Geo MACRO Ring Check Period *135*
MS{node},MI9 Geo MACRO Ring Error Shutdown Count *135*
MS{node},MI10 Geo MACRO Sync Packet Shutdown Count *136*
MS{node},MI11 Station Order Number *136*
MS{node},MI12 Card Identification (Read Only) *137*
MS{node},MI13 Ring Break Output indicator *137*
MS{node},MI100 Motor Activation Control word *138*
MS{node},MI101-102 Primary Feedback Selection *138*
MS{node},MI103 Sin Encoder/ Resolver #1 bias *139*
MS{node},MI104 Sin Encoder/ Resolver #2 bias *139*
MS{node},MI105 Cosine Encoder/ Resolver #1 bias *139*
MS{node},MI106 Cosine Encoder/ Resolver #2 bias *139*
MS{node},MI107 Motor 1 Encoder-Loss Mask *140*
MS{node},MI108 Motor 2 Encoder-Loss Mask *140*
Primary Channel Node-Specific Gate Array MI-variables 142
MS{node},MI910 Primary Encoder/Timer n Decode Control *142*
MS{node},MI911 Primary Enc. Position Compare n Channel Select *143*
MS{node},MI912 Primary Encoder n Capture Control *143*
MS{node},MI913 Primary Encoder Capture n Flag Select Control *144*
MS{node},MI914 Primary Encoder n Gated Index Select *144*
MS{node},MI915 Primary Encoder Index Gate State/Demux Control *145*
MS{node},MI910 Secondary Encoder Decode Control *146*
MS{node},MI911 Secondary Encoder counter Direction *146*
MS{node},MI912 Secondary Encoder Index Capture Control *147*
MS{node},MI913 Secondary Encoder Home Flag Capture Control *147*
MS{node},MI914 Secondary Encoder Filter Control *147*
MS{node},MI915 Secondary Encoder Capture Flag Select Control *148*

MS{node},MI916 Output n Mode Select *148*
MS{node},MI917 Output n Invert Control *148*
MS{node},MI918 Output n PFM Direction Signal Invert Control *149*
MS{node},MI919 Hardware 1/T *149*
MS{node},MI921 Flag Capture Position (Read Only) *150*
MS{node},MI922 ADC A Input Value (Read Only) *150*
MS{node},MI923 Compare Auto-Increment Value *150*
MS{node},MI924 ADC B Input Value (Read Only) *150*
MS{node},MI925 Compare A Position Value *151*
MS{node},MI926 Compare B Position Value *151*
MS{node},MI927 (Reserved for future use) *151*
MS{node},MI928 Compare-State Write Enable *151*
MS{node},MI929 Compare-Output Initial State *151*
General Hardware Setup MI-variables 152
MS{anynode}, MI930 SSI Channel 1 Control Word *152*
MS{anynode}, MI931 SSI Channel 2 Control Word *152*
MS{anynode}, MI932 Resolver Excitation Frequency Divider *153*
MS{anynode}, MI933 SSI Clock Frequency Divider *153*
MS{anynode},MI934-MI939 (Reserved for future use) *153*
MS{anynode}, MI940 Resolver Excitation Gain *153*
MS{anynode}, MI941 Resolver Excitation Phase Offset *154*
MS{anynode},MI942 ADC Strobe Word Channel 1 & 2** *154*
MS{node},MI943 Encoder Power control bit *154*
MS{node},MI944-MI949 (Reserved for future use) *154*
Global & 2-Axis Board I-Variables 155
MS{node},MI992 MaxPhase Frequency Control *155*
MS{node},MI993 Hardware Clock Control Handwheel Channels *155*
MS{node},MI994 PWM Deadtime *157*
MS{node},MI995 MACRO Ring Configuration/Status *157*
MS{node},MI996 MACRO Node Activate Control *158*
MS{node},MI997 Phase Clock Frequency Control *160*
MS{node},MI998 Servo Clock Frequency Control *160*

ABSOLUTE POWER ON ONLINE COMMANDS 161
$$* 161
$* 161

APPENDIX A 166
Fiber Optic Cable Ordering Information 166
Mating Connector and Cable Kits 166
Mating Connector and Cable Kits *166*
Connector and pins Part numbers *168*
Cable Drawings *170*
Regenerative Resistor: GAR78/48 176
Type of Cable for Encoder Wiring 177

APPENDIX B 180
Schematics 180
X3: Discrete I/O *180*
X6 and X7: Analog Inputs *182*
X8 and X9 Secondary Encoders (3 and 4) *183*

APPENDIX C 184
Communication to the Geo MACRO via the USB Port 184

APPENDIX D 186
MACRO Flag Transfer Location 186
Turbo PMAC2 Node Addresses 187

ADC Register Table 189
Stepping through an Electrical Cycle 190
Manually Stepping through an Electrical Cycle at 30 degree increments *190*
Example 1 of Hall Effect Values *191*
Example 2 of Hall Effect Values *192*

USEFUL NOTES 193

INTRODUCTION

The Geo Drive family of "bookcase"-style servo amplifiers provides many new capabilities for users. This family of 1- and 2-axis 3-phase amplifiers, built around a common core of highly integrated IGBT-based power circuitry, supports a wide variety of motors, power ranges, and interfaces. The 2-axis configurations share common power input, bus, and shunt for a very economical implementation.

Three command interfaces are provided: direct-PWM, MACRO-ring, and integrated PMAC controller, each described in following sections. In all three cases, fully digital "direct PWM" control is used. Direct PWM control eliminates D-to-A and A-to-D conversion delays and noise, allowing higher gains for more robust and responsive tuning without sacrificing stability.

All configurations provide these power-stage features:

- Direct operation off AC power mains (100 – 240 or 300 – 480 VAC, 50/60 Hz) or optional DC power input (24 – 350 or 24 – 700 VDC)
- Integrated bus power supply including soft start and shunt regulator (external resistor required)
- Separate 24VDC input to power logic circuitry
- Complete protection: over voltage, under voltage, over temperature, PWM frequency limit, minimum dead time, motor over temperature, short circuit, over current, input line monitor
- Ability to drive brushed and brushless permanent-magnet servo motors, or AC induction motors
- Single-digit LED display and six discrete LEDs for status information
- Optional safety relay circuitry. Please contact factory for more details and pricing.
- Easy setup with Turbo PMAC and UMAC controllers.

User Interface

The Geo Drive family is available in different versions distinguished by their user interface styles.

Geo MACRO Drives

The Geo MACRO Drive interfaces to the controller through the 125 Mbit/sec MACRO ring, with either a fiber-optic or Ethernet electrical medium, accepting numerical command values for direct PWM voltages and returning numerical feedback values for phase current, motor position, and status. It accepts many types of position feedback to the master controller, as well as axis flags (limits, home, and user) and general-purpose analog and digital I/O. Typically, the Geo MACRO Drives are commanded by either a PMAC2 Ultralite bus-expansion board, or a UMAC rack-mounted controller with a MACRO-interface card. This provides a highly distributed hardware solution, greatly simplifying system wiring, while maintaining a highly centralized software solution, keeping system programming simple.

- Choices for main feedback for each axis: A/B quadrature encoder, sinusoidal encoder with EnDat™ or Hiperface™, SSI encoder, resolver
- Secondary A/B quadrature encoder for each axis
- General-purpose isolated digital I/O: 4 in, 4 out at 24VDC
- 2 optional A/D converters, 12- or 16-bit resolution

Note:

Geo MACRO is not using the regular 8-axis or 16-axis MACRO station CPU. A new MACRO CPU was developed for the Geo MACRO drive.

Geo PMAC Drives

The Geo PMAC Drive is a standalone-capable integrated controller/amplifier with a built-in full PMAC2 controller having stored-program capability. It can be operated standalone, or commanded from a host computer through USB2.0 or 100 Mbps Ethernet ports. The controller has the full software capabilities of a PMAC (see descriptions), with an internal fully-digital connection to the advanced Geo power-stage , providing a convenient, compact, and cost-effective installation for one and two-axis systems, with easy synchronization to other drives and controls.

- Choices for main feedback for each axis: A/B quadrature encoder, sinusoidal encoder with EnDat™ or Hiperface™, SSI encoder, resolver
- Secondary A/B quadrature encoder for each axis
- General-purpose isolated digital I/O: 8 in, 6 out at 24VDC
- 2 optional A/D converters 12- or 16-bit resolution

Geo Direct-PWM Drives

The direct-PWM interface versions accept the actual power-transistor on/off signals from the PMAC2 controller, while providing digital phase-current feedback and drive status to the controller for closed-loop operation. Interface to the direct-PWM amplifier is through a standard 36-pin Mini-D style cable. The drive performs no control functions but has protection features. Drive installation, maintenance, and replacement are simplified because there is less wiring (position feedback and I/O are not connected to the drive) and there are no variables to set or programs to install in the drive.

- Fully centralized control means that all gains and settings are made in the PMAC; no software setup of drive is required
- No position feedback or axis flags required at the drive

MACRO Defined

MACRO defined is a digital interface for connection of multi–axis motion controllers, amplifiers and other I/O devices on a fiber optic or twisted pair copper (RJ45 connector) ring.

MACRO operates in a ring topology. Data is transmitted serially. Each station on the ring has an in port for receiving data and an out port for transmitting data. Nodes, residing at a station can be amplifier axes, I/O banks, or communication interfaces to other devices. A station can have one or several nodes allowing for multi-axis amplifiers with a single in and single out port. Data packets, (groups of 96 bits of serial data) from the motion controller or master node are addressed to a specific amplifier or slave node. If the data packet is not for an amplifier, it is passed on unchanged. If it is for the node, it copies the contents of the data packet (typically commands), places feedback data into a packet, and transmits the data packet.

MACRO's Advantages are:

- Single–plug connections between controls and amplifiers: A single fiber optic strand can provide a controller with: position feedback, flag status (limits, home flag), amplifier status and machine input status. This same strand can communicate to the amplifier and other devices on the MACRO network (Amplifier enable and amplifier command signals, machine outputs, commands to D/A converters; all can be implemented with a single plug connection).
- Noise Immunity: Fiber–optic cable transmits light, not electricity. Unlike electricity light is immune to electromagnetic noise, capacitive coupling, ground loops, and other wiring problems.
- Speed: MACRO's operation is 125 Mbits/second. This is at least 25 times faster than other digital motion control interfaces.

- One ring, multiple masters: In a ring network, several motion controllers (masters) can be on one ring. Each controller controls several axes (up to 32 ea.).
- Simplicity: Transmission within the MACRO ring requires no software intervention. The information sent to all nodes is written to a memory location and the MACRO hardware takes care of the rest.

Feedback Devices

Many motors incorporate a position feedback device. Devices are incremental encoders, resolvers, and sine encoder systems. The macro version of the Geo drive accepts feedback. In its standard form, it is set up to accept incremental encoder feedback. With the appropriate feedback option, it is possible to use either resolver or sinusoidal encoder feedback. Historically, the choice of a feedback device has been guided largely by cost and robustness. Today, feedbacks are relatively constant for the cost and picked by features such as size and feedback data. More feedback data or resolution provides the opportunity to have higher gains in a servo system.

Geo MACRO drives have standard secondary quadrature encoder feedback. One secondary encoder (X8) for one axis drive and two secondary encoders (X8 and X9) for dual axis drives (603542 rev-10A and above). Earlier versions of the Geo MACRO drive cannot use the secondary encoders.

Compatible Motors

The Geo drive product line is capable of interfacing to a wide variety of motors. The Geo drive can control almost any type of three-phase brushless motor, including DC brushless rotary, AC brushless rotary, induction, and brushless linear motors. Permanent magnet DC brush motors can also be controlled using two of the amplifiers three phases. Motor selection for an application is a science in itself and cannot be covered in this manual. However, some basic considerations and guidelines are offered. Motor manufacturers include a host of parameters to describe their motor.

Some basic equations can help guide an applications engineer to mate a proper drive with a motor. A typical application accelerates a load to a speed, running the speed for a while and then decelerating the load back into position.

Maximum Speed

The motor's maximum rated speed is given. This speed may or may not be achievable in a given system. The speed could be achieved if enough voltage and enough current loop gain are available. Also consider the motor's feedback adding limitations to achievable speeds. The load attached to the motor also limits the maximum achievable speed. In addition, some manufacturers will provide motor data with their drive controller, which is tweaked to extend the operation range that other controllers may be able to provide. In general, the maximum speed can be determined by input voltage line-to-line divided by Kb (the motor's back EMF constant). It is wise to de-rate this a little for proper servo applications.

Torque

The torque required for the application can be viewed as both instantaneous and average. Typically, the instantaneous or peak torque is calculated as a sum of machining forces or frictional forces plus the forces required to accelerate the load inertia. The machining or frictional forces on a machine must be determined by the actual application. The energy required to accelerate the inertia follows the equation: $T = JA$, where T is the torque in Newton-meters or pound-feet required for the acceleration, J is the inertia in kilogram-meters-squared or pound-feet-second squared, and A is in radians per second per second. The required torque can be calculated if the desired acceleration rate and the load inertia reflected back to the motor are known. The $T=JA$ equation requires that the motor's inertia be considered as part of the inertia-requiring torque to accelerate.

Once the torque is determined, the motors specification sheet can be reviewed for its torque constant parameter (Kt). The torque required at the application divided by the Kt of the motor provides the peak current required by the amplifier. A little extra room should be given to this parameter to allow for good

servo control.

Most applications have a duty cycle in which the acceleration profile occurs repetitively over time. Calculating the average value of this profile gives the continuous rating required by the amplifier. Applications also concern themselves with the ability to achieve a speed. The requirements can be reviewed by either defining what the input voltage is to the drive, or defining what the voltage requirements are at the motor. Typically, a system is designed at a 230 or 480V input line. The motor must be able to achieve the desired speed with this voltage limitation. This can be determined by using the voltage constant of the motor (Kb), usually specified in volts-per-thousand rpm. The application speed is divided by 1000 and multiplied by the motor's Kb. This is the required voltage to drive the motor to the desired velocity. Headroom of 20% is suggested to allow for good servo control.

Peak Torque

The peak torque rating of a motor is the maximum achievable output torque. It requires that the amplifier driving it be able to output enough current to achieve this. Many drive systems offer a 3:1 peak-to-continuous rating on the motor, while the amplifier has a 2:1 rating. To achieve the peak torque, the drive must be sized to be able to deliver the current to the motor. The required current is often stated on the datasheet as the peak current through the motor. In some sense, it can also be determined by dividing the peak amplifier's output rating by the motor's torque constant (Kt).

Continuous Torque

The continuous torque rating of the motor is defined by a thermal limit. If more torque is consumed from the motor than this on average, the motor overheats. Again, the continuous torque output of the motor is subject to the drive amplifier’s ability to deliver that current. The current is determined by the manufacturer’s datasheets stating the continuous RMS current rating of the motor and can also be determined by using the motor’s Kt parameter, usually specified in torque output per amp of input current.

Motor Poles

Usually, the number of poles in the motor is not a concern to the actual application. However, it should be noted that each pole-pair of the motor requires an electrical cycle. High-speed motors with high motor pole counts can require high fundamental drive frequencies that a drive amplifier may or may not be able to output. In general, drive manufacturers with PWM switching frequencies (16kHz or below) would like to see commutation frequencies less than 400 Hz. The commutation frequency is directly related to the number of poles in the motor.

Motor Inductance

PWM outputs require significant motor inductance to turn the on-off voltage signals into relatively smooth current flow with small ripple. Typically, motor inductance of servomotors is 1 to 15 mH. The Geo drive product series can drive this range easily. On lower-inductance motors (below 1mH), problems occur due to PWM switching where large ripple currents flow through the motor, causing excessive energy waste and heating. If an application requires a motor of less than 1mH, external inductors are recommended to increase that inductance. Motors with inductance in excess of 15mH can still be driven, but are slow to react and typically are out of the range of high performance servomotors.

Motor Resistance

Motor resistance is not really a factor in determining the drive performance, but rather, comes into play more with the achievable torque or output horsepower from the motor. The basic resistance shows up in the manufacturer's motor horsepower curve.

Motor Back EMF

The back EMF of the motor is the voltage that it generates as it rotates. This voltage subtracts from the bus voltage of the drive and reduces the ability to push current through the motor. Typical back EMF

ratings for servomotors are in the area of 8 to 200 volts-per-thousand rpm. The Geo drive product series can drive any range of back EMF motor, but the back EMF is highly related to the other parameters of the motor such as the motor inductance and the motor Kt. It is the back EMF of the motor that limits the maximum achievable speed and the maximum horsepower capability of the motor.

Motor Torque Constant

Motor torque constant is referred to as Kt and usually it is specified in torque-per-amp. It is this number that is most important for motor sizing. When the load that the motor will see and knowing the motor's torque constant is known, the drive amplifier requirements can be calculated to effectively size a drive amplifier for a given motor. Some motor designs allow Kt to be non-linear, in which Kt will actually produce less torque per unit of current at higher output speeds. It is wise to de-rate the systems torque producing capability by 20% to allow headroom for servo control.

Motor Inertia

Motor inertia comes into play with motor sizing because torque to accelerate the inertia of the motor is effectively wasted energy. Low inertia motors allow for quicker acceleration. However, consider the reflected inertia from the load back to the motor shaft when choosing the motor's inertia. A high ratio of load-to-motor inertia can limit the achievable gains in an application if there is compliance in the transmission system such as belt-drive systems or rubber-based couplings to the systems. The closer the rotor inertia matches the load's reflected inertia to the motor shaft, the higher the achievable gains will be for a given system. In general, the higher the motor inertia, the more stable the system will be inherently. Mechanical gearing is often placed between the load and the motor simply to reduce the reflected inertia back to the motor shaft.

Motor Cabling

Motor cables are an integral part of a motor drive system. Several factors should be considered when selecting motor cables. First, the PWM frequency of the drive emits electrical noise. Motor cables must have a good-quality shield around them. The motor frame must also have a separate conductor to bring back to the drive amplifier to help quench current flows from the motor due to the PWM switching noise. Both motor drain wire and the cable shield should be tied at both ends to the motor and to the drive amplifier.

Another consideration in selecting motor cables is the conductor-to-conductor capacitance rating of the cable. Small capacitance is desirable. Longer runs of motor cable can add motor capacitance loading to the drive amplifier causing undesired spikes of current. It can also cause couplings of the PWM noise into the earth grounds, causing excessive noise as well. Typical motor cable ratings would be 50 pf per foot maximum cable capacitance.

Another factor in picking motor cables is the actual conductor cross-sectional area. This refers to the conductors ability to carry the required current to and from the motor. When calculating the required cable dimensions, consider agency requirements, safety requirements, maximum temperature that the cable will be exposed to, the continuous current flow through the motor, and the peak current flow through the motor. Typically, it is not suggested that any motor cable be less than 14 AWG.

The motor cable's length must be considered as part of the application. Motor cable length affects the system in two ways. First, additional length results in additional capacitive loading to the drive. The drive's capacitive loading should be kept to no more than 1000pf. Additionally, the length sets up standing waves in the cable, which can cause excessive voltage at the motor terminals. Typical motor cable length runs of up to 60 meters (200 feet) for 230V systems and 15 meters (50 feet) for 480V systems are acceptable. Exceeding these lengths may put other system requirements in place for either a snubber at the motor end or a series inductor at the drive end. The series inductor at the drive end provides capacitance loading isolation from the drive and slows the rise time of the PWM signal into the cable, resulting in less voltage overshoot at the motor.

SPECIFICATIONS

Part Number

Geo MACRO Drive
Model Number Definition

G M L 03 1 R 0

Voltage Rating (Direct Mains)
L = 110 - 240 VAC
H = 300 - 480 VAC

Continuous/Peak Current Rating
(Sinusoidal RMS)
01 = 1.5/4.5 Amp (one or 3φ operation)
03 = 3/9 Amp (one or 3φ operation)
05 = 5/10 Amp (3φ input, for single φ need to derate 20%)
10 = 10/20 Amp (3φ input*)
15 = 15/30 Amp (3φ input*)
20 = 20/40 Amp (3φ input*)
30 = 30/60 Amp (3φ input*)
*For single phase input, need to derate 30%

Number of Axes
1 = Single Axis
2 = Dual Axis

Feedback Options
0 = No options, Default; Standard feedback per axis is quadrature differential encoder with hall effect inputs or SSI absolute encoder.
1 = Analog Feedback including:
- Option 0 Standard Feedback
- 4096x Sin/Cos interpolator
- Resolver Interface

2 = Absolute Feedback including:
- Option 1 Analog Feedback
- Endat™
- Hiperface™

3, 4, 5 = Same as Options 0, 1 and 2 described above but with two 16-bit analog-to-digital converter inputs

Note: Any available method can be used for feedback but only one method can be used at any time. Feedback method is selected by wiring.

MACRO Link Options:
F = Fiber Optic
R = RJ/45 (Default)

Product Width According to Ratings

Single-Width Units:
1.5/4.5 Dual Axis
3/9 Dual Axis
5/10 Single and Dual Axis
10/20 Single Axis and Dual Axis (240VAC)
15/30 Single Axis

Double-Width Units:
10/20 Dual Axis (480VAC)
15/30 Dual Axis
20/40 Single Axis
30/60 Single Axis

		GMx012xx	GMx051xx	GMx101xx	GMx151xx	GMx032xx	GMx052xx	GML102xx	GMx201xx	GMx301xx	GMH102xx	GMx152xx
Size Axis	**Single axis**		√	√	√				√	√		
	Dual Axis	√				√	√	√			√	√
	Single Width	√*	√	√	√	√	√	√				
	Double width								√	√	√	√
* Low Profile Unit, No heatsink, no Fan												

Geo MACRO Feedback Options

Model	Default Configuration: Quadrature Encoders Or SSI Absolute Encoders And Hall Effect inputs	Analog (Sin/Cos) Encoders: x4096 Interpolator Resolver to Digital Converters	Absolute Encoder Interfaces: EnDat Hiperface	Addition of two channels of 16-bit A/D converters with each feedback option
GMxxxxx0	√			
GMxxxxx1		√		
GMxxxxx2			√	
GMxxxxx3	√			√
GMxxxxx4		√		√
GMxxxxx5			√	√

Package Types

Geo package types provide various power levels and one or two axis capability with three different package types.

The Geo Drive has a basic package size of 3.3"W x 11"H x 8.0"D(84mm W x 280mm H x 203mm D). This size includes the heat sink and fan. In this package size, Single Width, the Geo can handle one or two low-to-medium power axes or only a single axis for medium to high power.

The mechanical design of the Geo drive is such that it allows two heat sinks to be easily attached together to provide two high power axes in a double width configuration. This double package size is 6.5" W x 11" H x 8.0" D (165 mm W x 280 mm H x 203 mm D). It provides a highly efficient package size containing two axes of up to about 10kW each thus driving nearly 24kW of power, but using a single interface card. This results in a highly cost effective package.

There is also one more package type only for the low power (1.5A/4.5A) single width Geo drive, model Gxx012xx. This package substitutes the heatsink and the fan with a smaller plate which has the same mounting pattern as the regular single width drive, making the units depth 2.2inches (56mm) less than the single width drive, 5.8" D (148mm D).

- **Low Profile: GMx012xx (only)**
  3.3" wide (84 mm) (no heatsink, no fan), Maximum Power Handling ~1200 watts
  Package Dimensions: 3.3" W x 11" H x 5.8" D (84 mm W x 280 mm H x 148 mm D)
  Weight: 4.3 lbs. (1.95kgs)
- **Single Width: GMx051xx, GMx101xx, GMx151xx, GMH032xx, GMx052xx and GML102xx.**
  3.3" wide (84 mm)(with heatsink and fan), Maximum Power Handling ~12000 watts
  GML032xx Single Width, with heatsink, no Fan (Weight 5.4lbs/2.45kgs)
  Package Dimensions: 3.3" W x 11" H x 8.0" D (84 mm W x 280 mm H x 203 mm D)
  Weight: 5.5 lbs. (2.50kgs)
- **Double Width: GMx201xx, GMx301xx, GMH102xx and GMx152xx.**
  6.5” wide (164mm)(with heatsink and fan), Maximum Power Handling ~24,000 watts
  Package Dimensions: 6.5" W x 11" H x 8.0" D (164 mm W x 280 mm H x 203 mm D)
  Weight: 11.6lbs (5.3kgs)

Electrical Specifications

230VAC Input Drives

		GxL051	GxL101	GxL151	GxL201	GxL301
Main Input Power	Nominal Input Voltage (VAC)	230				
	Rated Input Voltage (VAC)	97-265				
	Rated Continuous Input Current (A AC_{RMS})	3.3	6.6	9.9	13.2	19.8
	Rated Input Power (Watts)	1315	2629	3944	5259	7888
	Frequency (Hz)	50/60				
	Phase Requirements	1Φ or 3Φ	3Φ			
	Charge Peak Inrush Current (A)					
	Main Bus Capacitance (µf)	3380		5020	6800	
Output Power	Rated Output Voltage (V)	138				
	Rated Cont. Output Current per Axis	5	10	15	20	30
	Peak Output Current (A) for 2 seconds	10	20	30	40	60
	Rated Output Power per Axis (Watts)	1195	2390	3585	4780	7171
Bus Protection	Nominal DC Bus	325				
	Over-voltage Trip Level (VDC)	410				
	Under-voltage Lockout Level (VDC)	10				
Shunt Regulator Ratings	Turn-On Voltage (VDC)	392				
	Turn-Off Voltage (VDC)	372				
	Delta Tau Recommended Load Resistor (300 W Max.)	GAR78	GAR48		GAR48-3	
Control Logic Power	Input Voltage (VDC)	20-27				
	Input Current (A)	2A				
	Inrush Current (A)	4A				
Current Feedback	Resolution (bits)	12				
	Full-scale Signed Reading (±A)	16.26	32.53	48.79	65.05	97.58
Transistor Control	Delta Tau Recommended PWM Frequency (kHz) @rated current	12		10	8	
	Minimum Dead Time (µs)	1				
	Charge Pump Time (% of PWM period.)	5				

Note:

All values at ambient temperature of 0-45°C (113F) unless otherwise stated.

		GxL012	GxL032	GxL052	GxL102	GxL152
	Output Circuits (axes)	2				
Main Input Power	Nominal Input Voltage (VAC)	230				
	Rated Input Voltage (VAC)	97-265				
	Rated Continuous Input Current (A AC_{RMS})	1.98	3.96	6.6	13.2	19.8
	Rated Input Power (Watts)	789	1578	2629	5259	7888
	Frequency (Hz)	50/60				
	Phase Requirements	1Φ or 3Φ	1Φ or 3Φ	3Φ		
	Charge Peak Inrush Current (A)					
	Main Bus Capacitance (µf)	3380				5020
Output Power	Rated Output Voltage (V)	138				
	Rated Cont. Output Current per Axis	1.5	3	5	10	15
	Peak Output Current (A) for 2 seconds	4.5	9	10	20	30
	Rated Output Power per Axis (Watts)	359	717	1195	2390	3585
Bus Protection	Nominal DC Bus	325				
	Over-voltage Trip Level (VDC)	410				
	Under-voltage Lockout Level (VDC)	10				
Shunt Regulator Ratings	Turn-On Voltage (VDC)	392				
	Turn-Off Voltage (VDC)	372				
	Delta Tau Recommended Load Resistor (300 W Max.)	GAR78			GAR48	
Control Logic Power	Input Voltage (VDC)	20-27				
	Input Current (A)	2A				
	Inrush Current (A)	4A				
Current Feedback	Resolution (bits)	12				
	Full-scale Signed Reading (±A)	7.32	14.64	16.26	32.53	48.79
Transistor Control	Delta Tau Recommended Maximum PWM Frequency (kHz)	16		12		10
	Minimum Dead Time (µs)	1				
	Charge Pump Time (% of PWM period.)	5				

Note:

All values at ambient temperature of 0-45°C (113F) unless otherwise stated.

480VAC Input Drives

		GxH051	GxH101	GxH151	GxH201	GxH301
	Output Circuits (axes)	1				
Main Input Power	Nominal Input Voltage (VAC)	480				
	Rated Input Voltage (VAC)	300-525				
	Rated Continuous Input Current (A AC_{RMS})	3.3	6.6	9.9	13.2	19.8
	Rated Input Power (Watts)	2744	5487	8231	10974	16461
	Frequency (Hz)	50/60				
	Phase Requirements	1Φ or 3Φ	3Φ			
	Charge Peak Inrush Current (A)					
	Main Bus Capacitance (µf)	845		1255	1700	
	Rated Output Voltage (V) @ Rated Current	288				
	Rated Cont. Output Current per Axis	5	10	15	20	30
	Peak Output Current (A) for 2 seconds	10	20	30	40	60
	Rated Output Power per Axis (Watts)	2494	4988	7482	9977	14965
Bus Protection	Nominal DC Bus	678				
	Over-voltage Trip Level (VDC)	828				
	Under-voltage Lockout Level (VDC)	20				
Shunt Regulator Ratings	Turn-On Voltage (VDC)	784				
	Turn-Off Voltage (VDC)	744				
	Delta Tau Recommended Load Resistor (300 W Max.)	GAR78	GAR48		GAR48-3	
Control Logic Power	Input Voltage (VDC)	20-27				
	Input Current (A)	2A				
	Inrush Current (A)	4A				
Current Feedback	Resolution (bits)	12				
	Full-scale Signed Reading (±Amperes)	16.26	32.53	48.79	65.05	97.58
Transistor Control	Delta Tau Recommended PWM Frequency (KHz) @ rated current	12	10	8		
	Minimum Dead Time (µs)	1.6				
	Charge Pump Time (% of PWM period.)	5				

Note:

All values at ambient temperature of 0-45°C (113F) unless otherwise stated.

		GxH012	GxH032	GxH052	GxH102	GxH152
	Output Circuits (axes)	2				
Main Input Power	Nominal Input Voltage (VAC)	480				
	Rated Input Voltage (VAC)	300-525				
	Rated Continuous Input Current (A AC_{RMS})	1.98	3.96	6.6	13.2	19.8
	Rated Input Power (Watts)	1646	3292	5487	10974	16461
	Frequency (Hz)	50/60				
	Phase Requirements	1Φ or 3Φ		3Φ		
	Charge Peak Inrush Current (A)					
	Main Bus Capacitance (µf)	845				1255
	Rated Output Voltage (V) @ Rated Current	288				
	Rated Cont. Output Current per Axis	1.5	3	5	10	15
	Peak Output Current (A) for 2 seconds	4.5	9	10	20	30
	Rated Output Power per Axis (Watts)	748	1496	2494	4988	7482
Bus Protection	Nominal DC Bus	678				
	Over-voltage Trip Level (VDC)	828				
	Under-voltage Lockout Level (VDC)	20				
Shunt Regulator Ratings	Turn-On Voltage (VDC)	784				
	Turn-Off Voltage (VDC)	744				
	Delta Tau Recommended Load Resistor (300 W Max.)	GAR78			GAR48	
Control Logic Power	Input Voltage (VDC)	20-27				
	Input Current (A)	2A				
	Inrush Current (A)	4A				
Current Feedback	Resolution (bits)	12				
	Full-scale Signed Reading (±Amperes)	7.32	14.64	16.26	32.53	48.79
Transistor Control	Delta Tau Recommended PWM Frequency (KHz) @ rated current	12		10	8	
	Minimum Dead Time (µs)	1.6				
	Charge Pump Time (% of PWM period.)	5				

Note:

All values at ambient temperature of 0-45°C (113F) unless otherwise stated.

Environmental Specifications

Description	Unit	Specifications
Operating Temperature	°C	+0 to 45°C. Above 45°C, derate the continuous peak output current by 2.5% per °C above 45°C. Maximum Ambient is 55°C
Rated Storage Temperature	°C	-25 to +70
Humidity	%	10% to 90% non-condensing
Shock		Call Factory
Vibration		Call Factory
Operating Altitude	Feet (Meters)	To 3300 feet (1000meters). Derate the continuous and peak output current by 1.1% for each 330 feet (100meters) above the 3300feet
Air Flow Clearances	in (mm)	3" (76.2mm) above and below unit for air flow

Recommended Fusing and Wire Gauge

Model	Recommended Fuse (FRN/LPN)	Recommended Wire Gauge*
GxL012xx	15	14 AWG
GxL032xx	20	12 AWG
GxL051xx	20	12 AWG
GxL052xx	20	12 AWG
GxL101xx	20	12 AWG
GxL102xx	20	12 AWG
GxL151xx	25	10 AWG
GxL152xx	25	10 AWG
GxL201xx	25	10 AWG
GxL301xx	30	8 AWG
GxH012xx	15	14 AWG
GxH032xx	20	12 AWG
GxH051xx	20	12 AWG
GxH052xx	20	12 AWG
GxH101xx	20	12 AWG
GxH102xx	20	12 AWG
GxH151xx	25	10 AWG
GxH152xx	25	10 AWG
GxH201xx	25	10 AWG
GxH301xx	30	8 AWG
* See local and national code requirements		

Wire Sizes

Geo Drive electronics create a DC bus by rectifying the incoming AC electricity. The current flow into the drive is not sinusoidal but rather a series of narrow, high-peak pulses. Keep the incoming impedance small so that these current pulses are not hindered. Conductor size, transformer size, and fuse size recommendations may seem larger than normally expected. All ground conductors should be 8AWG minimum using wires constructed of many strands of small gauge wire. This provides the lowest impedance to high-frequency noises.

RECEIVING AND UNPACKING

Delta Tau products are thoroughly tested at the factory and carefully packaged for shipment. When the Geo Drive is received, do the following immediately.

1. Observe the condition of the shipping container and report any damage immediately to the commercial carrier that delivered the drive.
2. Remove the drive from the shipping container and remove all packing materials. Check all shipping material for connector kits, documentation, diskettes, CD ROM, or other small pieces of equipment. Be aware that some connector kits and other equipment pieces may be quite small and can be discarded accidentally if care is not used when unpacking the equipment. The container and packing materials can be retained for future shipment.
3. Verify that the part number of the drive received is the same as the part number listed on the purchase order.
4. Inspect the control for external physical damage that may have been sustained during shipment and report any damage immediately to the commercial carrier that delivered the controller.
5. Electronic components in this amplifier are design-hardened to reduce static sensitivity. However, use proper procedures when handling the equipment.
6. If the Geo Drive is to be stored for several weeks before use, be sure that it is stored in a location that conforms to published storage humidity and temperature specifications stated in this manual.

Use of Equipment

The following guidelines describe the restrictions for proper use of the Geo Drive:

- The components built into electrical equipment or machines can be used only as integral components of such equipment.
- The Geo Drives are to be used only on grounded three-phase industrial mains supply networks (TN-system, TT-system with grounded neutral point).
- The Geo Drives must not be operated on power supply networks without a ground or with an asymmetrical ground.
- If the Geo Drives are used in residential areas, or in business or commercial premises, implement additional filter measures.
- The Geo Drives may be operated only in a closed switchgear cabinet, taking into account the ambient conditions defined in the environmental specifications.

Delta Tau guarantees the conformance of the Geo Drives with the standards for industrial areas stated in this manual, only if Delta Tau components (cables, controllers, etc.) are used.

MOUNTING

The location of the controller is important. Installation should be in an area that is protected from direct sunlight, corrosives, harmful gases or liquids, dust, metallic particles, and other contaminants. Exposure to these can reduce the operating life and degrade the performance of the controller.

Several other factors should be evaluated carefully when selecting a location for installation:

- For effective cooling and maintenance, the controller should be mounted on a smooth, non-flammable vertical surface.
- At least 3 inches (76mm) top and bottom clearance must be provided for airflow. At least 0.4 inches (10mm) clearance is required between controls (each side).
- Temperature, humidity and vibration specifications should also be considered.

The Geo Drives can be mounted with a traditional 4-hole panel mount, two U shape/notches on the bottom and two pear shaped holes on top. This keeps the heat sink and fan (single width and double width drives), inside the mounting enclosure. On the low profile units (low power), the heat sink and fan are replaced with a flat plate and the mounting enclosure itself is used as a heat sink. This reduces the depth of the Geo amplifier by about 2.2 inches (~56 mm) to a slim 5.8 inch D (150 mm D). Mounting is also identical to the single and double width drives through the 4-hole panel mount.

If multiple Geo drives are used, they can be mounted side-by-side, leaving at least to of a 0.4 inch clearance between drives. This means a 3.7 inch center-to-center distance (94 mm) with the single width and low profile Geo drives. Double width Geo amplifiers can be mounted side by side at 6.9 inch center-to-center distance (175 mm).

It is extremely important that the airflow is not obstructed by the placement of conduit tracks or other devices in the enclosure.

The drive is mounted to a back panel. The back panel should be unpainted and electrically conductive to allow for reduced electrical noise interference. The back panel should be machined to accept the mounting bolt pattern of the drive. Make sure that all metal chips are cleaned up before the drive is mounted so there is no risk of getting metal chips inside the drive.

The drive is mounted to the back panel with four M4 screws and internal-tooth lock washers. It is important that the teeth break through any anodization on the drive's mounting gears to provide a good electrically conductive path in as many places as possible. Mount the drive on the back panel so there is airflow at both the top and bottom areas of the drive (at least three inches).

Caution:

Units must be installed in an enclosure that meets the environmental IP rating of the end product (ventilation or cooling may be necessary to prevent enclosure ambient from exceeding 45° C [113° F]).

Note:

For more detail drawings (SolidWorks, eDrawings, DXF) visit our website under the product that you are looking for.

Low Profile

Gxx012xx

	Width	Height	Depth	Weight
Mounting dimensions	3.30in./ 84mm	11.00in./ 280mm	5.79in./ 147.1mm	4.3lbs/ 1.95kgs

MACRO Version, No Heatsink, No Fan

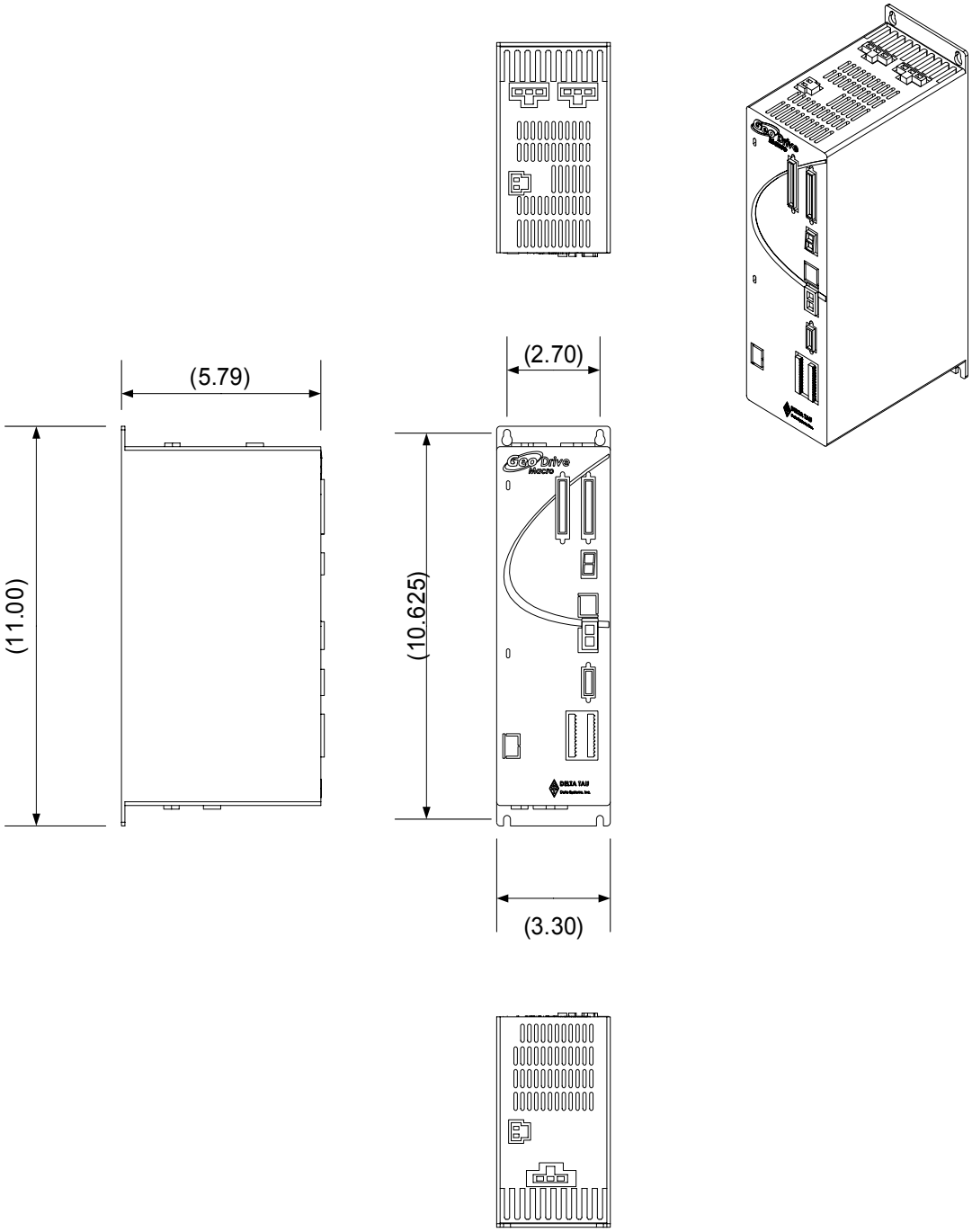

Single Width

Gxx051xx, Gxx101xx, Gxx151xx, Gxx032xx, Gxx052xx and GxL102xx

	Width	Height	Depth	Weight
Mounting dimensions	3.30in./ 84mm	11.00in./ 280mm	8.00in./ 203mm	5.5lbs/ 2.5kgs

MACRO Version, Internal Heatsink Mtg,
Single wide with Fan

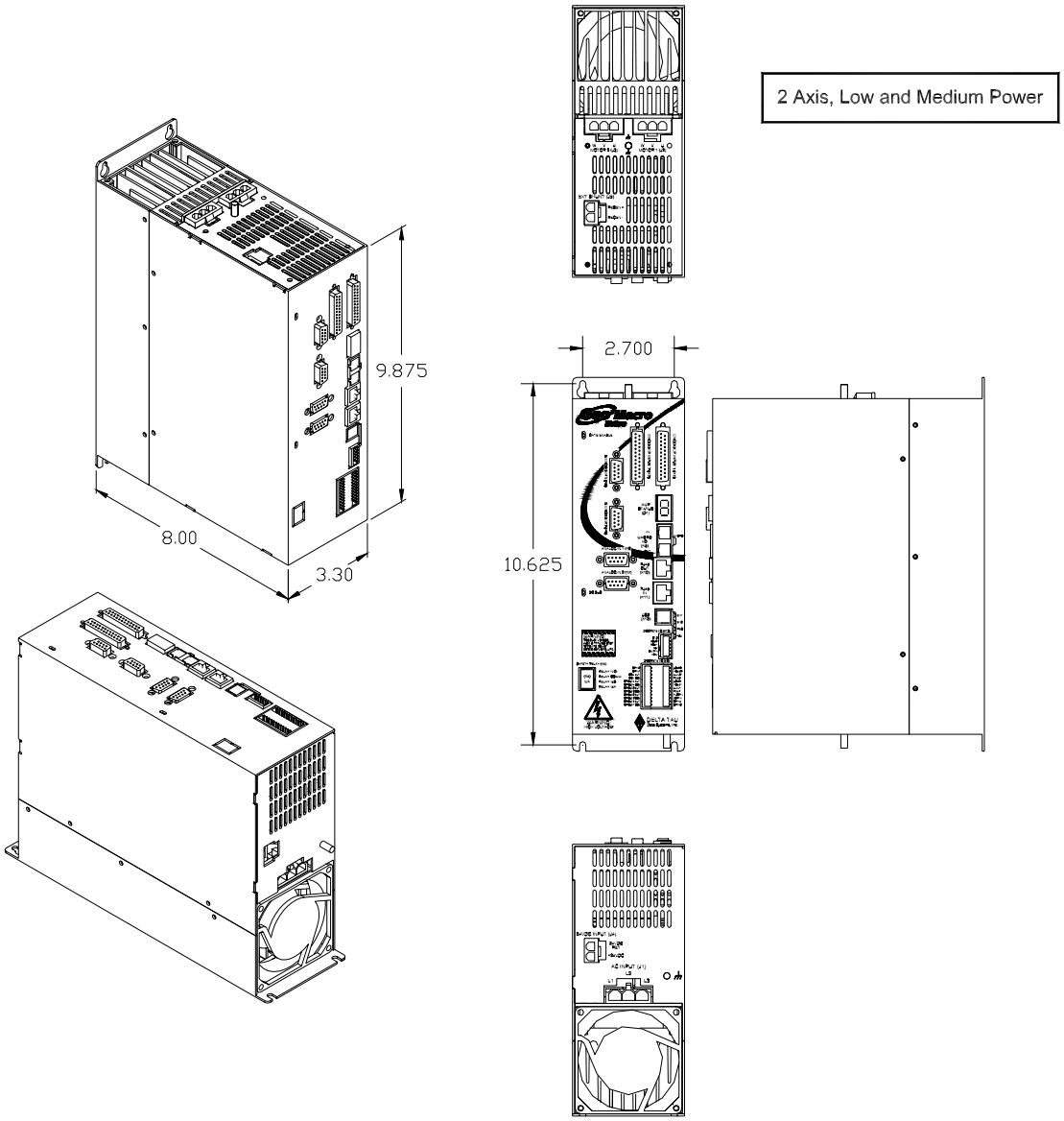

Double Width

Gxx201xx, Gxx301xx, GxH102xx and Gxx152xx

	Width	Height	Depth	Weight
Mounting dimensions	6.50in./ 165mm	11.00in./ 280mm	8.00in./ 203mm	Call the factory

10.0/20.0 & 15.0/30.0 AMPS CONT/PEAK (306-603703)
MACRO Version, Internal Heatsink Mtg,
Double wide with 2 Fans

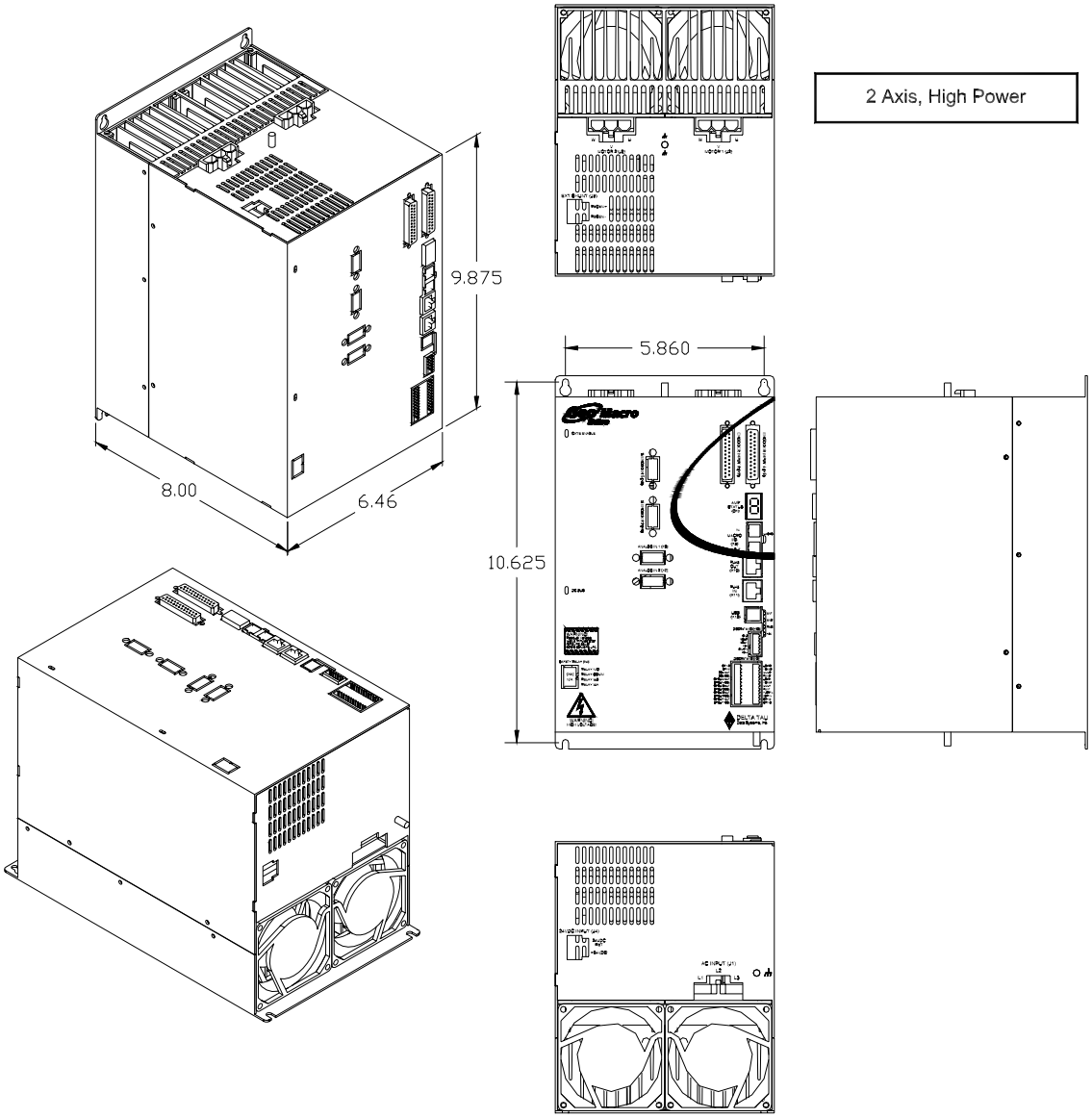

CONNECTIONS

System (Power) Wiring

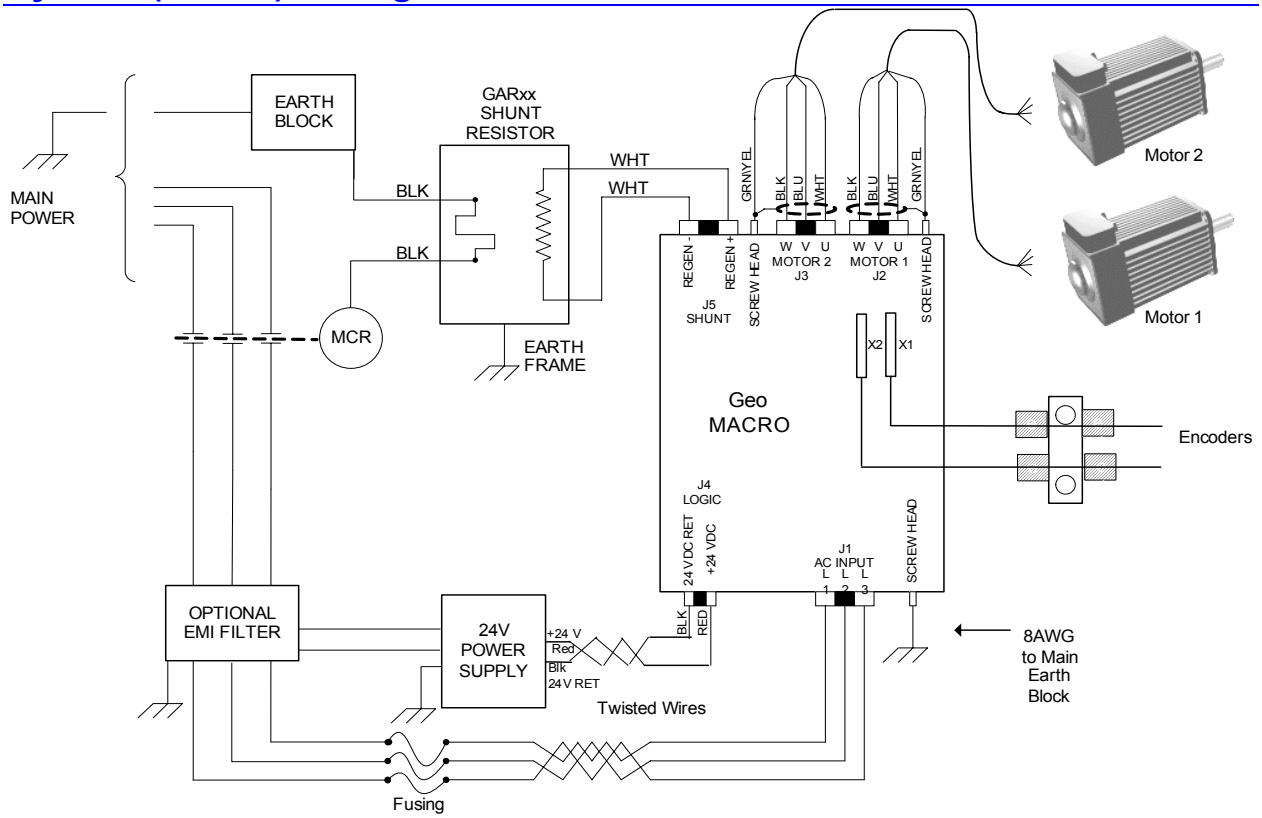

WARNING:

Installation of electrical control equipment is subject to many regulations including national, state, local, and industry guidelines and rules. General recommendations can be stated but it is important that the installation be carried out in accordance with all regulations pertaining to the installation.

Fuse and Circuit Breaker Selection

In general, fusing must be designed to protect the weakest link from fire hazard. Each Geo drive is designed to accept more than the recommended fuse ratings. External wiring to the drive may be the weakest link as the routing is less controlled than the drive's internal electronics. Therefore, external circuit protection, be it fuses or circuit breakers, must be designed to protect the lesser of the drive or external wiring.

High peak currents and high inrush currents demand the use of slow blow type fuses and hamper the use of circuit breakers with magnetic trip mechanisms. Generally, fuses are recommended to be larger than what the rms current ratings require. Remember that some drives allow three times the continuous rated current on up to two axis of motion. Time delay and overload rating of protection devices must consider this operation.

Use of GFI Breakers

Ground Fault Interrupter circuit breakers are designed to break the power circuit in the event that outgoing currents are not accompanied by equal and opposite returning currents. These breakers assume that if outgoing currents are not returning then there is a ground path in the load. Most circuit breakers of this type account for currents as low as 10mA PWM switching in servo drives coupled with parasitic capacitance to ground in motor windings and long cables generate ground leakage current. Careful

installation practices must be followed. The use of inductor chokes in the output of the drive will help keep these leakage currents below breaker threshold levels.

Transformer and Filter Sizing

Incoming power design considerations for use with Geo Drives require some over rating. In general, it is recommended that all 3-phase systems using transformers and incoming filter chokes be allotted a 25% over size to keep the impedances of these inserted devices from affecting stated system performance. In general, it is recommended that all single-phase systems up to 1kW be designed for a 50% overload. All single-phase systems over 1kW should be designed for a 200% overload capacity.

Noise Problems

When problems do occur often it points to electrical noise as the source of the problem. When this occurs, turn to controlling high-frequency current paths. If following the grounding instructions does not work, insert chokes in the motor phases. These chokes can be as simple as several wraps of the individual motor leads through a ferrite ring core (such as Micrometals T400-26D). This adds high-frequency impedance to the outgoing motor cable thereby making it harder for high-frequency noise to leave the control cabinet area. Care should be taken to be certain that the core's temperature is in a reasonable range after installing such devices.

Operating Temperature

It is important that the ambient operating temperature of the Geo Drive be kept within specifications. The Geo Drive is installed in an enclosure such as a NEMA cabinet. The internal temperature of the cabinet must be kept under the Geo Drive Ambient Temperature specifications. It is sometimes desirable to roughly calculate the heat generated by the devices in the cabinet to determine if some type of ventilation or air conditioning is required. For these calculations the Geo Drive's internal heat losses must be known. Budget 100W per axis for 1.5A drives, 150W per axis for 3A drives, 200W per axis for 5A drives, 375W per axis for 10A drives, 500W per axis for 15A drives, 650W per axis for 20A drives.

From 0°C to 45°C ambient no derating required. Above 45°C, derate the continuous and peak output current by 2.5% per °C above 45°C. Maximum ambient is 55°C.

Single Phase Operation

Due to the nature of power transfer physics, it is not recommended that any system design attempt to consume more than 2kW from any single-phase mains supply. Even this level requires careful considerations. The simple bridge rectifier front end of the Geo Drive, as with all other drives of this type, require high peak currents. Attempting to transfer power from a single-phase system getting one charging pulse each 8.3 milliseconds causes excessively high peak currents that can be limited by power mains impedances. The Geo Drive output voltage sags, the input rectifiers are stressed, and these current pulses cause power quality problems in other equipment connected to the same line. While it is possible to operate drives on single-phase power, the actual power delivered to the motor must be considered. Never design expecting more than 1.5 HP total from any 115V single-phase system and never more than 2.5 HP from any 230V single-phase system.

Wiring AC Input, J1

The main bus voltage supply is brought to the Geo drive through connector J1. 1.5A continuous and 3A continuous Geo drives can be run off single-phase power. It is acceptable to bring the single-phase power into any two of the three input pins on connector J1. Higher-power drive amplifiers require three-phase input power. It is extremely important to provide fuse protection or overload protection to the input power to the Geo drive amplifier. Typically, this is provided with fuses designed to be slow acting, such as FRN-type fuses. Due to the various regulations of local codes, NEC codes, UL and CE requirements, it is very important to reference these requirements before making a determination of how the input power is wired.

Additionally, many systems require that the power be able to be turned on and off in the cabinet. It is typical that the AC power is run through some kind of main control contact within the cabinet, through the fuses, and then fed to a Geo drive. If multiple Geo drives are used, it is important that each drive has its own separate fuse block.

Whether single- or three-phase, it is important that the AC input wires be twisted together to eliminate noise radiation as much as possible. Additionally, some applications may have further agency noise reduction requirements that require that these lines be fed from an input filtering network.

The AC connections from the fuse block to the Geo drive are made via a cable that is either purchased as an option from Delta Tau (CABKITxx) or made with the appropriate connector kit (CONKITxx). (Appendix A)

J1: AC Input Connector Pinout

Pin #	Symbol	Function	Description	Notes
1	L3	Input	Line Input Phase 3	
2	L2	Input	Line Input Phase 2	
3	L1	Input	Line Input Phase 1	(not used for single Phase Input)
On Gxx201xx and Gxx301xx, there is a fourth pin for Ground connection. If DC bus is used, use L3 for DC+ and L2 for DC return. Connector is located at the bottom side of the unit.				

Wiring Earth-Ground

Panel wiring requires that a central earth-ground location be installed at one part of the panel. This electrical ground connection allows for each device within the enclosure to have a separate wire brought back to the central wire location. Usually, the ground connection is a copper plate directly bonded to the back panel or a copper strip with multiple screw locations. The Geo drive is brought to the earth-ground via a wire connected to the M4 stud (5mm thread) on the top of the location through a heavy gauge, multi-strand conductor to the central earth-ground location. On some models, a fourth pin is provided on the 3-phase AC input connector (J1) and on the motor output connectors to provide a ground connection.

Earth Grounding Paths

High-frequency noises from the PWM controlled power stage will find a path back to the drive. It is best that the path for the high-frequency noises be controlled by careful installation practices. The major failure in problematic installations is the failure to recognize that wire conductors have impedances at high frequencies. What reads 0 ohms on a handheld meter may be hundreds of ohms at 30MHz. Consider the following during installation planning:

1. Star point all ground connections. Each device wired to earth ground should have its own conductor brought directly back to the central earth ground plate.
2. Use unpainted back panels. This allows a wide area of contact for all metallic surfaces reducing high frequency impedances.
3. Conductors made up of many strands of fine conducts outperform solid or conductors with few strands at high frequencies.

4. Motor cable shields should be bonded to the back panel using 360-degree clamps at the point they enter or exit the panel.
5. Motor shields are best grounded at both ends of the cable. Again, connectors using 360-degree shield clamps are superior to connector designs transporting the shield through a single pin. Always use metal shells.
6. Running motor armature cables with any other cable in a tray or conduit should be avoided. These cables can radiate high frequency noise and couple into other circuits.

Wiring 24 V Logic Control, J4

An external 24VDC power supply is required to power the logic portion of the Geo drive. This power can remain on, regardless of the main AC input power, allowing the signal electronics to be active while the main motor power control is inactive. The 24V is wired into connector J4. The polarity of this connection is extremely important. Carefully follow the instructions in the wiring diagram. This connection can be made using 16 AWG wire directly from a protected power supply. In situations where the power supply is shared with other devices, it may be desirable to insert a filter in this connection.

The power supply providing this 24V must be capable of providing an instantaneous current of at least 1.5A to be able to start the DC-to-DC converter in the Geo drive. In the case where multiple drives are driven from the same 24V supply, it is recommended that each drive be wired back to the power supply terminals independently. It is also recommended that the power supply be sized to handle the instantaneous inrush current required to start up the DC-to-DC converter in the Geo drive.

J4: 24VDC Input Logic Supply Connector

Pin #	Symbol	Function	Description	Notes
1	24VDC RET	Common	Control power return	
2	+24VDC	Input	Control power input	24V+/-10%, 2A
Connector is located at the bottom side of the unit.				

Wiring the Motors

The cable wiring must be shielded and have a separate conductor connecting the motor frame back to the drive amplifier. The cables are available in cable kits (CABKITxx) from Delta Tau. (See Appendix A.)

Motor phases are conversed in one of three conventions. Motor manufacturers will call the motor phases A, B, or C. Other motor manufacturers call them U, V, W. Induction motor manufacturers may call them L1, L2, and L3. The drive's inputs are called U, V, and W. Wire U, A, or L1 to the drive's U terminal. Wire V, B, or L2 to the drive's V terminal. Wire W, C, or L3 to the drive's W terminal.

The motor's frame drain wire and the motor cable shield must be tied together at the mounting stud (5mm thread) on top of the Geo drive product.

J2: Motor 1 Output Connector Pinout

Pin #	Symbol	Function	Description	Notes
1	U	Output	Axis 1 Phase1	
2	V	Output	Axis 1 Phase2	
3	W	Output	Axis 1 Phase3	
On Gxx201xx and Gxx301xx, there is a fourth pin for Ground connection. Connector is located at the top side of the unit.				

J3: Motor 2 Output Connector Pinout

Pin #	Symbol	Function	Description	Notes
1	U	Output	Axis 2 Phase1	2- Axis drives only
2	V	Output	Axis 2 Phase2	2- Axis drives only
3	W	Output	Axis 2 Phase3	2- Axis drives only
Connector is located at the top side of the unit.				

Wiring the Motor Thermostats

Some motor manufacturers provide the motors with integrated thermostat overload detection capability. Typically, it is in one or two forms: a contact switch that is normally closed or a PTC. These sensors can be wired into the Geo drive's front panel at connector X1 and X2.

Motor 1 thermostat output is wired to pin 23 of X1, **In_Therm_Mot1**, and referenced to the GND pin13 or 25. In addition, if dual axis drive is ordered, Motor 2 thermostat output is wired to pin 23 of X2, **In_Therm_Mot2**, and referenced to the GND pin 13 or 25.

Function	Pin #
In_Therm_Mtr	23
GND	13,25

Wiring the Motor Thermostats

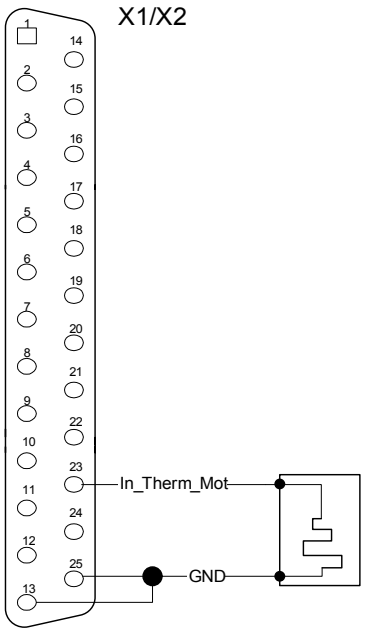

MS{node},MI100 has special functions for Geo MACRO drives (firmware 1.006 and above) to enable the motor over-temperature function of the drive, default this function is disabled (firmware 1.006 and above). If someone wants to enable the motor #1 over-temperature input to his Geo then he needs to set MS{node},MI100= $4. For motor #2 over-temperature input to be enabled MS{node},MI100=$8 and if the user wants both motor over-temperature inputs enable then MS{node},MI100=$C.

For earlier drives (firmware 1.005 and before) If the motor over-temperature protection is not required, In_Therm_Mot1/2 should be connected to GND, pin 13 or 25. Otherwise, the drive status display will show a warning error code **S** for motor #1 over -temperature, or an **A** for motor 2 over -temperature. If both pins are not shorted to GND, display will show **S (the first error gets triggered)**

Wiring the Regen (Shunt) Resistor, J5

The Geo Drive family offers compatible regen resistors as optional equipment. The regen resistor is used as a shunt regulator to dump excess power during demanding deceleration profiles. The GAR48 and GAR78 resistors are designed to dump the excess bus energy very quickly.

The regen circuit is also known as a shunt regulator. Its purpose is to dump power fed back into the drive from a motor acting as a generator. Excessive energy can be dumped via an external load resistor. The Geo product series is designed for operation with external shunt resistors of 48 Ω for the 10 and 15 amp versions or 78 Ω for the 1.5, 3, and 5 amp versions. These are available directly from Delta Tau as GAR48 and GAR78, respectively. These resistors are provided with pre-terminated cables that plug into connector J5.

Each resistor is the lowest ohm rating for its compatible drive and is limited for use to 200 watts RMS. There are times the regen design might be analyzed to determine if an external Regen resistor is required or what its ratings can be. The following data is provided for such purpose.

Caution:

The black wires are for the thermostat and the white wires are for the regen resistor on the external regen resistor (pictured below). These resistors can reach temperatures of up to 200 degrees C. These resistors must be mounted away from other devices and near the top of the cabinet. Additionally, precautions must be made to ensure the resistors are enclosed and cannot be touched during operation or anytime they are hot. Sufficient warning labels should be placed prominently near these resistors.

The regen resistors incorporate a thermal overload protection thermostat that opens when the core temperature of the resistor exceeds 225 degrees C. This thermostat is available through the two black leads exiting the resistor. It is important that these two leads be wired in a safety circuit that stops the system from operating should the thermostat open.

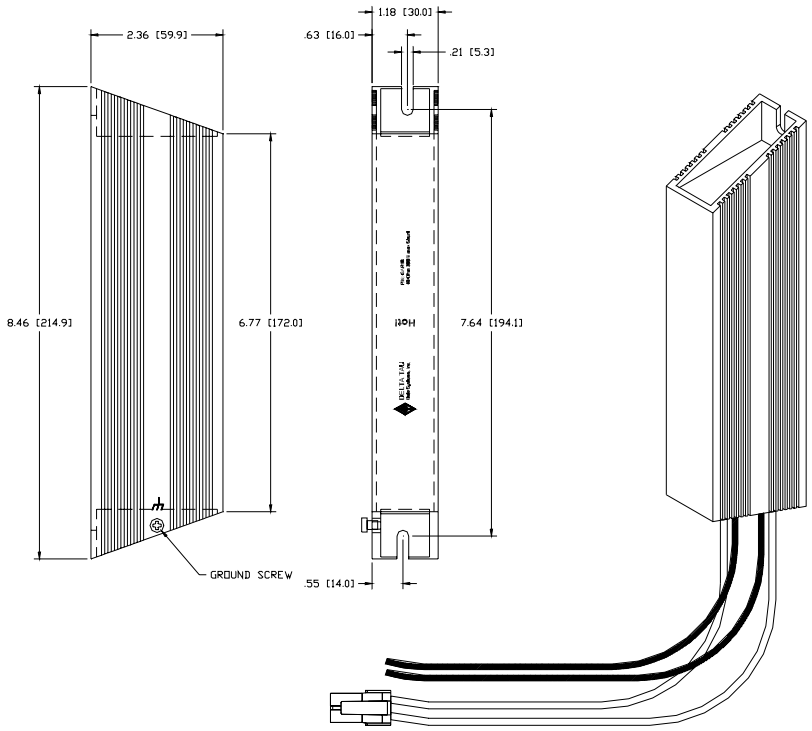

J5: External Shunt Connector Pinout

Pin #	Symbol	Function
1	Regen-	Output
2	Regen+	Output
Connector is located at the top side of the unit DT Connector part number #014-000F02-HSG and pins part number #014-043375-001 Molex Crimper tool p/n#63811-0400		
For the high Current Drives, Gxx201xx and Gxx301xx , this connector is a 3 pin Large Molex connector		
1	CAP-	Output
2	Regen-	Output
3	Regen+	Output
Connector is located at the top side of the unit. DT Connector part number #014-H00F03-049 and pins part number #014-042815-001. Molex Crimper tool p/n#63811-1500		

Shunt Regulation

When the motor is used to slow the moving load, this is called regenerative deceleration. Under this operation, the motor is acting as a generator consuming energy from the load while passing the energy into the DC Bus storage capacitors. Left unchecked, the DC Bus voltage can raise high enough to damage the drive. For this reason there are protection mechanisms built into the Geo Drive product such as shunt regulation and over-voltage protection.

The shunt regulator monitors the DC Bus voltage. If this voltage rises above a present threshold (Regen Turn On Voltage), the Geo Drive will turn on a power device intended to place the externally mounted regen resistor across the bus to dump the excessive energy. The power device keeps the regen resistor connected across the bus until the bus voltage is sensed to be below the Regen Turn Off voltage at which time the power device removes the resistor connection.

Minimum Resistance Value

The regen resistor selection requires that the resistance value of the selected resistor will not allow more current to flow through the Geo Drive's power device than specified.

Maximum Resistance Value

The maximum resistor value that will be acceptable in an application is one that will not let the bus voltage reach the drive's stated over voltage specification during the deceleration ramp time. The following equations defining energy transfer can be used to determine the maximum resistance value.

Energy Transfer Equations

Regen, or shunt, regulation analysis requires study of the energy transferred during the deceleration profile. The basic philosophy can be described as follows:

- The motor and load have stored kinetic energy while in motion.
- The drive removes this energy during deceleration by transferring to the DC bus.
- There are losses during this transfer, both mechanical and electrical, which can be significant in some systems.
- The DC bus capacitors can store some energy.
- The remaining energy, if any, is transferred to the regen resistor.

Kinetic Energy

The first step is to ascertain the amount of kinetic energy in the moving system, both the motor rotor and the load it is driving. In metric (SI) units, the kinetic energy of a rotating mass is:

$$E_K = \frac{1}{2} J\omega^2$$

where:
E_K is the kinetic energy in joules, or watt-seconds (J, W-s)
J is the rotary moment of inertia in kilogram-meter^2 (kg-m^2)
ω is the angular velocity of the inertia in radians per second (1/s)

If the values are not in these units, first convert them. For example, if the speed is in revolutions per minute (rpm), multiply this value by $2\pi/60$ to convert to radians per second.

When English mechanical units are used, there are additional conversion factors must be included to get the energy result to come out in joules. For example, if the rotary moment of inertia J is expressed in lb-ft-sec^2, the following equation should be used:

$$E_K = 0.678 J\omega^2$$

If the rotary moment of inertia J is expressed in lb-in-sec^2, the following equation should be used:

$$E_K = 0.0565 J\omega^2$$

In standard metric (SI) units, the kinetic energy of a linearly moving mass is:

$$E_K = \frac{1}{2} m v^2$$

where:
E_K is the kinetic energy in joules (J)
m is the mass in kilograms (kg)
v is the linear velocity of the mass in meters/second (m/s)

Here also, to get energy in Joules from English mechanical units, additional conversion factors are required. To calculate the kinetic energy of a mass having a weight of W pounds, the following equation can be used:

$$E_K = 0.678 \frac{W}{g} v^2 = 0.0211 W v^2$$

where:
E_K is the kinetic energy in joules (J)
W is the weight of the moving mass in pounds (lb)
g is the acceleration of gravity (32.2 ft/sec^2)
v is the linear velocity of the mass in feet per second (ft/sec)

Energy Lost in Transformation

Some energy will be lost in the transformation from mechanical kinetic energy to electrical energy. The losses will be both mechanical due to friction and electrical due to resistance. In most cases, these losses will comprise a small percentage of the transformed energy and can be safely ignored especially because ignoring losses leads to a conservative design. However, if the losses are significant and the system should not be over-designed, calculate these losses.

In metric (SI) units, the mechanical energy lost due to Coulomb (dry) friction in a constant deceleration to stop of a rotary system can be expressed as:

$$E_{LM} = \frac{1}{2} T_f \omega t_d$$

where:
E_{LM} is the lost energy in joules (J)
T_f is the resistive torque due to Coulomb friction in newton-meters (N-m)
ω is the starting angular velocity of the inertia in radians per second (1/s)
t_d is the deceleration time in seconds (s)

If the frictional torque is expressed in the common English unit of pound-feet (lb-ft), the comparable expression is:

$$E_{LM} = 0.678 T_f \omega t_d$$

In metric (SI) units, the mechanical energy lost due to Coulomb (dry) friction in a constant deceleration to stop of a linear system can be expressed as:

$$E_{LM} = \frac{1}{2} F_f v t_d$$

where:
E_{LM} is the lost energy in joules (J)
T_f is the resistive force due to Coulomb friction in newtons (N)
v is the starting linear velocity in meters/second (m/s)
t_d is the deceleration time in seconds (s)

If the frictional force is expressed in the English unit of pounds (lb) and the velocity in feet per second (ft/sec), the comparable expression is:

$$E_{LM} = 0.678 F_f v t_d$$

The electrical resistive losses in a 3-phase motor in a constant deceleration to stop can be calculated as:

$$E_{LE} = \frac{\sqrt{3}}{2} i_{rms}^2 R_{pp} t_d$$

where:

E_{LE} is the lost energy in joules (J)
i_{rms} is the current required for the deceleration in amperes (A), equal to the required deceleration torque divided by the motor's (rms) torque constant K_T
R_{pp} is the phase-to-phase resistance of the motor, in ohms (Ω)
t_d is the deceleration time in seconds (s)

Capacitive Stored Energy in the Drive

The energy not lost during the transformation is initially stored as additional capacitive energy due to the increased DC bus voltage. The energy storage capability of the drive can be expressed as:

$$E_C = \frac{1}{2} C \left(V_{regen}^2 - V_{nom}^2 \right)$$

where:
E_C is the additional energy storage capacity in joules (J)
C is the total bus capacitance in Farads
V_{regen} is the DC bus voltage at which the regeneration circuit would have to activate, in volts (V)
V_{nom} is the normal DC bus voltage, in volts (V)

Evaluating the Need for a Regen Resistor

Any starting kinetic energy that is not lost in the transformation and cannot be stored as bus capacitive energy must be dumped by the regeneration circuitry in to the regen (shunt) resistor. The following equation can be used to determine whether this will be required:

$$E_{excess} = E_K - E_{LM} - E_{LE} - E_C$$

If E_{excess} in this equation is greater than 0, a regen resistor will be required.

Regen Resistor Power Capacity

A given regen resistor will have both a peak (instantaneous) and a continuous (average) power dissipation limit. It is therefore necessary to compare the required peak and continuous regen power dissipation requirements against the limits for the resistor.

The peak power dissipation that will occur in the regen resistor in the application will be:

$$P_{peak} = \frac{V_{regen}^2}{R}$$

where:
P_{peak} is peak power dissipation in watts (W)
V_{regen} is the DC bus voltage at which the regeneration circuit activates, in volts (V)
R is the resistance value of the regen resistor, in ohms (Ω)

However, this power dissipation will not be occurring all of the time, and in most applications, only for a small percentage of the time. Usually, the regen will only be active during the final part of a lengthy deceleration, after the DC bus has charged up to the point where it exceeds the regen activation voltage. The average power dissipation value can be calculated as:

$$P_{avg} = P_{peak} \frac{\%on-time}{100}$$

where:
P_{avg} is average power dissipation in watts (W)
%on-time is the percentage of time the regen circuit is active

Note:

The Turn-on voltage for the shunt circuitry for all Low power Geo drives is 392V (high power is 784V). There is a Hysteresis of 20V, so if the regen turns on @ 392V (784V) it will not turn off until it drops to 372V (744V).

Bonding

The proper bonding of shielded cables is imperative for minimizing noise emissions and increasing immunity levels. The bonding effect is to reduce the impedance between the cable shield and the back

panel.

Power input wiring does not require shielding (screening) if the power is fed to the enclosure via metal conduit. If metal conduit is not used in the system, shielded cable is required on the power input wires along with proper bonding techniques.

Filtering

CE Filtering

Apply proper bonding and grounding techniques, described earlier in this section, when incorporating EMC noise filtering components to meet this standard.

Noise currents often occur in two ways. The first is conducted emissions passed through ground loops. The quality of the system-grounding scheme inversely determines the noise amplitudes in the lines. These conducted emissions are of a common-mode nature from line-to-neutral (ground). The second is radiated high-frequency emissions that usually are capacitively coupled from line-to-line and are differential in nature.

When mounting the filters, make sure the enclosure has an unpainted metallic surface. This allows more surface area to be in contact with the filter housing and provides a lower impedance path between the housing and the back plane. The back panel should have a high frequency ground strap connection to the enclosure frame and earth ground.

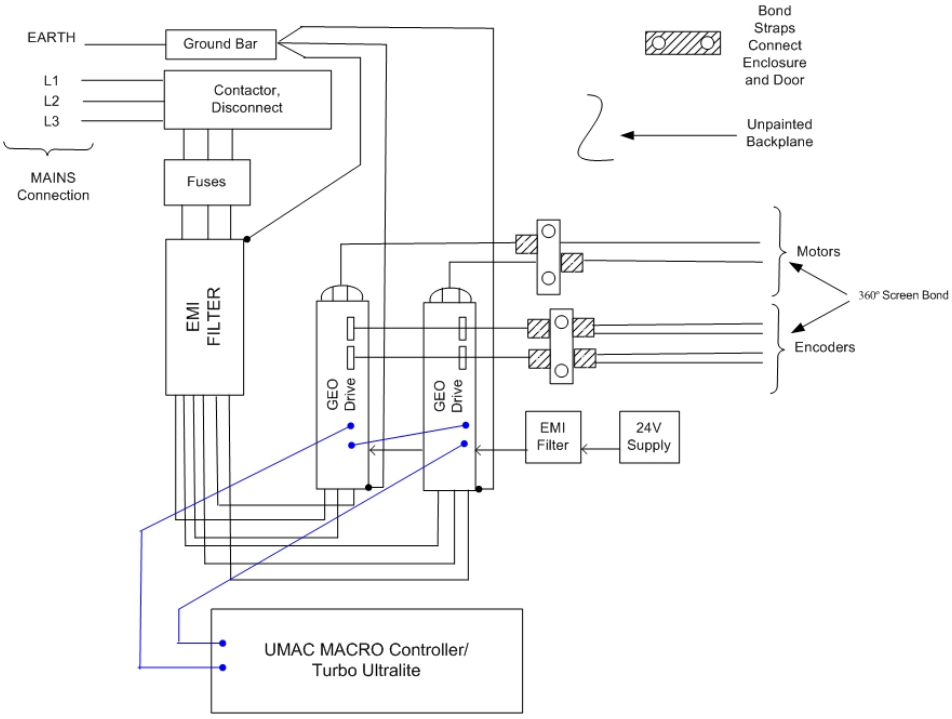

Input Power Filtering

Caution:

To avoid electric shock, do not touch filters for at least 10 seconds after removing the power supply.

The Geo Drive electronic system components require EMI filtering in the input power leads to meet the conducted emission requirements for the industrial environment. This filtering blocks conducted-type emissions from exiting onto the power lines and provides a barrier for power line EMI.

Adequately size the system. The type of filter must be based on the voltage and current rating of the system and whether the incoming line is single or three-phase. One input line filter may be used for multi-axis control applications. These filters should be mounted as close to the incoming power as possible so noise is not capacitively coupled into other signal leads and cables. Implement the EMI filter according to the following guidelines:

- Mount the filter as close as possible to the incoming cabinet power.
- When mounting the filter to the panel, remove any paint or material covering. Use an unpainted metallic back panel.
- Filters are provided with a ground connection. All ground connections should be tied to ground.
- Filters can produce high leakage currents; they must be grounded before connecting the supply.
- Do not touch filters for a period of ten seconds after removing the power supply.

Motor Line Filtering

Motor filtering may not be necessary for CE compliance of Geo Drives. However, this additional filtering increases the reliability of the system. Poor non-metallic enclosure surfaces and lengthy, unbonded (or unshielded) motor cables that couple noise line-to-line (differential) are some of the factors that may lead to the necessity of motor lead filtering.

Motor lead noise is either common-mode or differential. The common-mode conducted currents occur between each motor lead and ground (line-to-neutral). Differential radiated currents exist from one motor lead to another (line-to-line). The filtering of the lines feeding the motor provides additional attenuation of noise currents that may enter surrounding cables and equipment I/O ports in close proximity.

Differential mode currents commonly occur with lengthy motor cables. As the cable length increases, so does its capacitance and ability to couple noise from line-to-line. While every final system is different and every application of the product causes a slightly different emission profile, it may become necessary to use differential mode chokes to provide additional noise attenuation to minimize the radiated emissions. The use of a ferrite core placed at the Geo Drive end on each motor lead attenuates differential mode noise and lowers frequency (30 to 60 MHz) broadband emissions to within specifications. Delta Tau recommends a Fair-Rite P/N 263665702 (or equivalent) ferrite core.

Common mode currents occur from noise spikes created by the PWM switching frequency of the Geo Drive. The use of a ferrite or iron-powder core toroid places common mode impedance in the line between the motor and the Geo Drive. The use of a common mode choke on the motor leads may increase signal integrity of encoder outputs and associated I/O signals.

I/O Filtering

I/O filtering may be desired, depending on system installation, application, and integration with other equipment. It may be necessary to place ferrite cores on I/O lines to avoid unwanted signals entering and disturbing the Geo.

Connecting Main Feedback Sensors (X1 & X2)

X1 is for motor #1 and X2 for motor #2.

Digital Quadrature Encoders

Quadrature encoders provide two digital signals that are a function of the position of the encoder, each nominally with 50% duty cycle, and nominally one-quarter cycle apart. This format provides four distinct states per cycle of the signal, or per line of the encoder. The phase difference of the two signals permits the decoding electronics to discern the direction of travel, which would not be possible with a single signal.

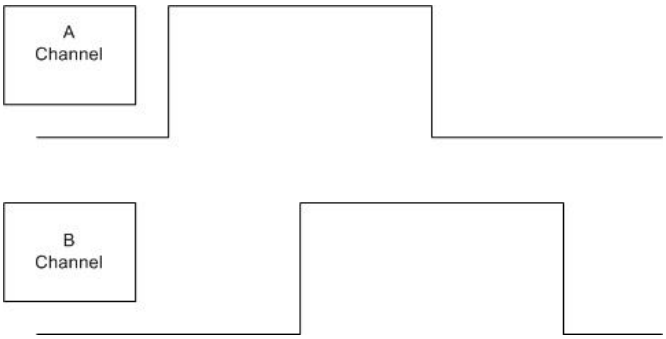

Typically, these signals are at 5V TTL/CMOS levels, whether single-ended or differential. The input circuits are powered by the main 5V supply for the controller, but they can accept up to +/-12V between the signals of each differential pair, and +/-12V between a signal and the GND voltage reference.

Differential encoder signals can enhance noise immunity by providing common-mode noise rejection. Modern design standards virtually mandate their use for industrial systems, especially in the presence of PWM power amplifiers, which generate a great deal of electromagnetic interference.

Hardware Setup

The Geo Drive accepts inputs from two digital encoders and provides encoder position data to the motion processor. X1 is encoder 1 and X2 is encoder 2. The differential format provides a means of using twisted pair wiring that allows for better noise immunity when wired into machinery.

Geo Drives encoder interface circuitry employs differential line receivers. The wiring diagram on the right shows an example of how to connect the Geo drive to a quadrature encoder.

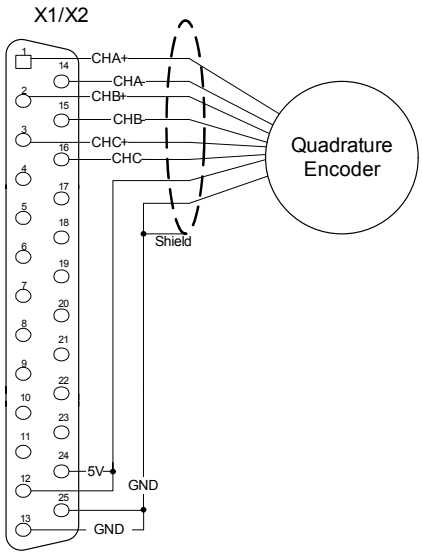

Function	Pin #
ChA+	1
ChA-	14
ChB+	2
ChB-	15
ChC+	3
ChC-	16

Digital Hall Commutation Sensors

Many motor manufactures now give the consumer the option of placing both Hall effect sensors and quadrature encoders on the end shaft of brushless motors. This will allow the controller to estimate the rotor magnetic field orientation and adjusts the command among the motor phases properly without rotating the motor at power-up. If this is not done properly, the motor or amplifier could be damaged.

Note:

These digital hall-effect position sensors should not be confused with analog hall-effect current sensors used in many amplifiers to provide current feedback data for the current loop.

Hardware Setup

The Geo Drive accepts digital hall sensor inputs. X1 is for motor #1 and X2 for motor #2.

The wiring diagram on the right shows an example of how to connect the Geo drive to Digital Hall sensors.

Function	Pin #
U	8
V	21
W	9
T	22
5V	12/24
GND	13/25

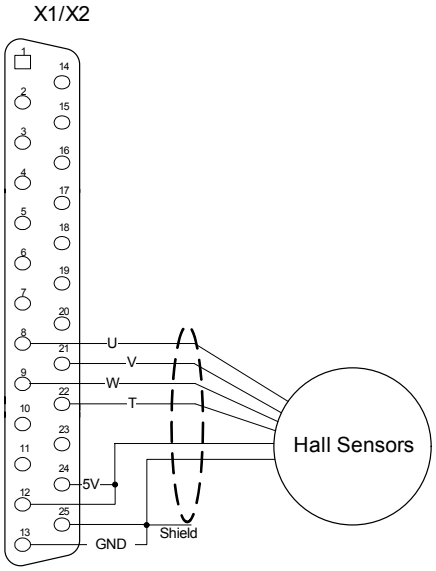

SSI Encoders

Geo Drive was designed to work with either Gray Code or Binary Style SSI Encoders. The Geo Drive takes the gray/binary code information and converts it into a parallel binary word for absolute and ongoing position data.

Hardware Setup

The differential format provides a means of using twisted pair wiring that allows for better noise immunity when wired into machinery.

The wiring diagram to the right shows an example of how to connect the Geo Drive to an SSI encoder.

Function	Pin#
CLK+	6
DATA+	7
CLK-	19
DATA-	20
ENCPWR/5V	12/24
GND	13/25
Note: We assume the SSI Encoder power requirements are for 5V, else use of an external power supply for the SSI encoder is required. Tie together the Geo Drive GND and the power supply for noise immunity	

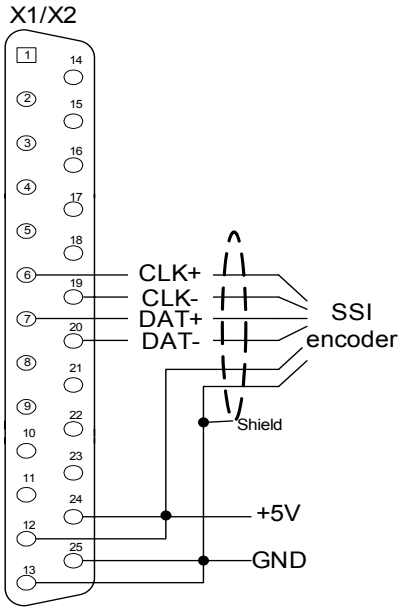

Sinusoidal Encoders

The Geo Drive with the Interpolator option accepts inputs from two sinusoidal or quasi-sinusoidal encoders and provides encoder position data to the motion processor. This interpolator creates 4,096 steps per sine-wave cycle. User needs to order the option.

Be sure to use shielded, twisted pair cabling for sinusoidal encoder wiring. Double insulated is the best. The sinusoidal signals are very small and must be kept as noise free as possible. Avoid cable routing near noisy motor or driver wiring. Refer to the appendix for tips on encoder wiring.

It is possible to reduce noise in the encoder lines of a motor-based system by the use of inductors that are placed between the motor and the amplifier. Improper grounding techniques may also contribute to noisy encoder signals.

Note:

Voltage mode encoders are becoming the more popular choice for machine designs due to their lower impedance outputs. Lower impedance outputs represent better noise immunity, and therefore more reliable encoder interfaces.

The Geo Drive uses 1 Vp-p voltage mode encoders only.

Hardware Setup

The differential format provides a means of using twisted pair wiring that allows for better noise immunity when wired into machinery.

Sinusoidal encoders operate on the concept that there are two analog signal outputs 90 degrees out of phase.

Geo Drives can be used only with the voltage mode encoder type, and the lines have to be differential. The wiring diagram to the right shows an example of how to connect the Geo drive to a sinusoidal encoder.

Function	Pin#
Sin+	1
Sin-	14
Cos+	2
Cos-	15
Index+	3
Index-	16

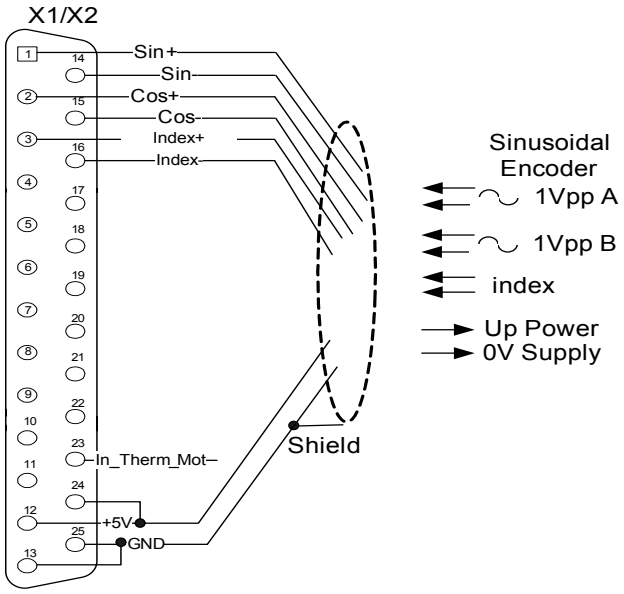

Hiperface® Interface

The Geo Drive will read the absolute data from the Hiperface® interface only if the appropriate option is ordered. (Not yet released firmware).

Hardware Setup

The differential format provides a means of using twisted pair wiring that allows for better noise immunity when wired into machinery.

- Safe data transmission
- Absolute positioning
- Only 8 leads

The wiring diagram to the right shows an example of how to connect the Geo Drive with Hiperface.

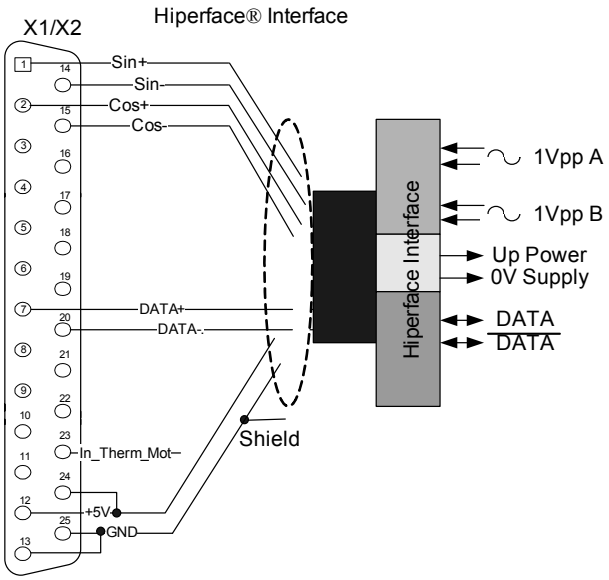

Function	Pin#
Sin+/ ChA+	1
Cos+/ChB+	2
Sin-/ChA-	14
Cos-/ChB-	15
DATA+	7
DATA-	20
ENCPWR/5V	12/24
GND	13/25

Note: We assume the Hiperface Interface power requirements are for 5V, else use of an external power supply for the Hiperface is required. Tie together the Geo Drive GND and the power supply GND for noise immunity.

EnDat Interface

The Geo Drive will read the absolute data from the EnDat (**En**coder **Dat**a) interface only if the appropriate option is ordered. (Not yet released firmware)

Hardware Setup

The differential format provides a means of using twisted pair wiring that allows for better noise immunity when wired into machinery.

The wiring diagram to the right shows an example of how to connect the Geo Drive to an EnDat interface.

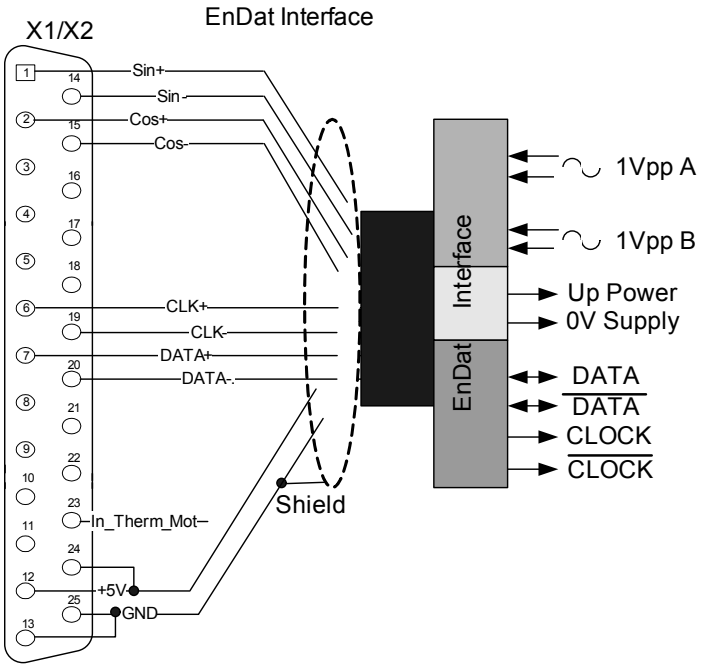

Function	Pin#
Sin+/ ChA+	1
Cos+/ChB+	2
Sin-/ChA-	14
Cos-/ChB-	15
CLK+	6
DATA+	7
CLK-	19
DATA-	20
ENCPWR/5V	12/24
GND	13/25

Note: We assume the EnDat Interface power requirements are for 5V, else use of an external power supply for the EnDat is required. Tie together the Geo Drive GND and the power supply GND for noise immunity.

Resolvers

The Geo Drive can interface to most industry standard resolvers if the appropriate option is ordered. Typical resolvers requiring 5 to 10 kHz excitation frequencies with voltages ranging from 5 to 10V peak-to-peak are compatible with this drive.

Fundamentally, the Geo Drive connects three differential analog signal pairs to each resolver: a single excitation signal pair, and two analog feedback signal pairs. The wiring diagram below shows an example of how to connect the Geo drive to the Resolver

Hardware Setup

The differential format provides a means of using twisted pair wiring that allows for better noise immunity when wired into machinery.

The wiring diagram to the right shows an example of how to connect the Geo Drive to a Resolver.

Function	Pin #
ResSin+	4
ResSin-	17
ResCos+	5
ResCos-	18
ResOut	11
GND	13,25

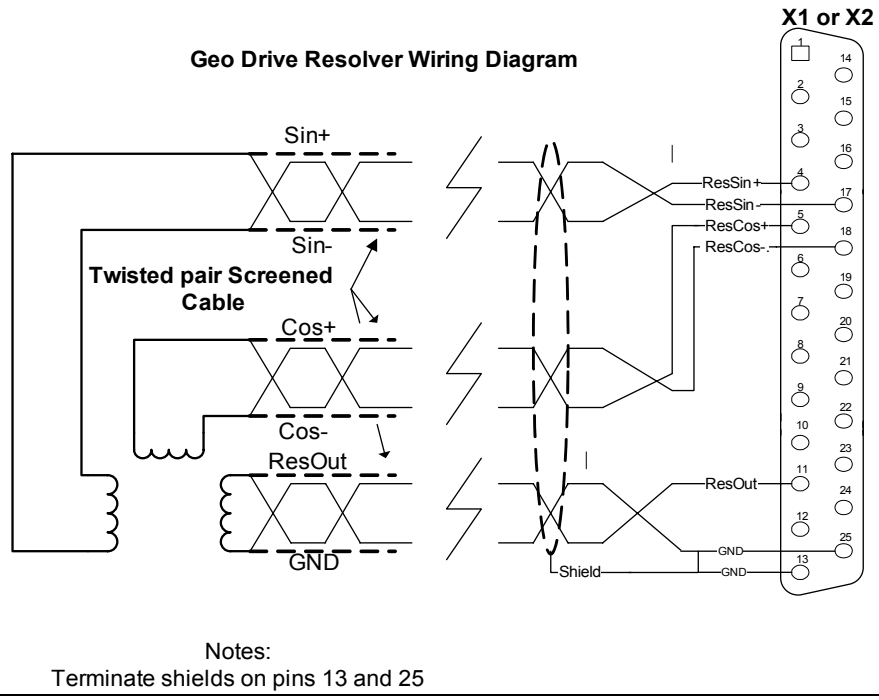

Connecting Secondary Quad. Encoders (X8 & X9)

Secondary encoders in the Geo MACRO Amplifier are standard since logic board revision -10A and above, and are found on Db-connectors X8 and X9. They must be Quadrature TTL encoders.

Hardware Setup

The Geo Drive also accepts inputs from two digital quadrature encoders and provides encoder position data to the motion processor. X8 is secondary encoder #1 and X9 is secondary encoder #2. The differential format provides a means of using twisted pair wiring that allows for better noise immunity when wired into machinery.

Geo Drives encoder interface circuitry employs differential line receivers. The wiring diagram on the right shows an example of how to connect the Geo drive to a quadrature encoder.

Function	Pin #
ChA+	1
ChA-	6
ChB+	2
ChB-	7
ChC+	3
ChC-	8
ENCPWR 5V	4
GND	5

Secondary Encoders Quadrature

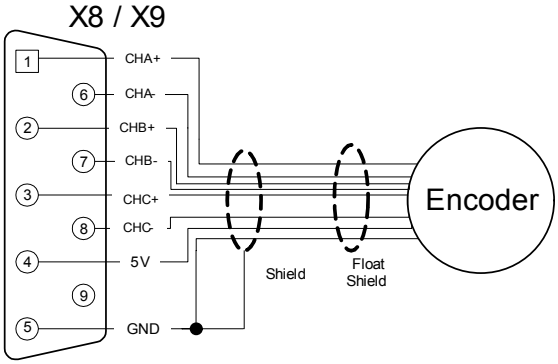

Connecting General Purpose I/O & Flags (X3)

X3 provides the connector for general purpose I/O (12-24VDC) and the input flags for each axis (Positive Limit, Negative Limit, Home Switch and USER flag input). The outputs are rated for 0.5A and have to be set up all sinking or all sourcing, no mixing topologies. Same is true for the inputs, no mixing topologies, all sinking or all sourcing.

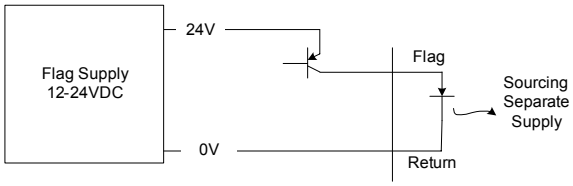

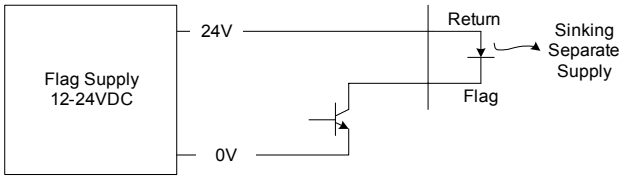

Sample wiring the I/O

Sourcing Inputs and Sourcing Outputs

Function	Pin #
GP_OUT 1 EMT	2
GP_OUT 2 EMT	4
GP_OUT 3 EMT	6
GP_OUT 4 EMT	8
COM COL	9
GP IN 1	11
GP IN 2	12
GP IN 3	13
GP IN 4	14
I/O RTN	15

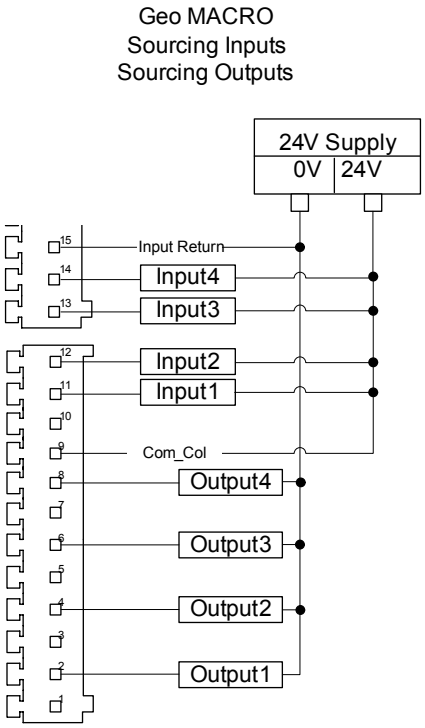

Sinking Inputs and Sinking Outputs

Function	Pin #
GP_OUT 1 COL	1
GP_OUT 2 COL	3
GP_OUT 3 COL	5
GP_OUT 4 COL	7
COM EMT	10
GP IN 1	11
GP IN 2	12
GP IN 3	13
GP IN 4	14
I/O RTN	15

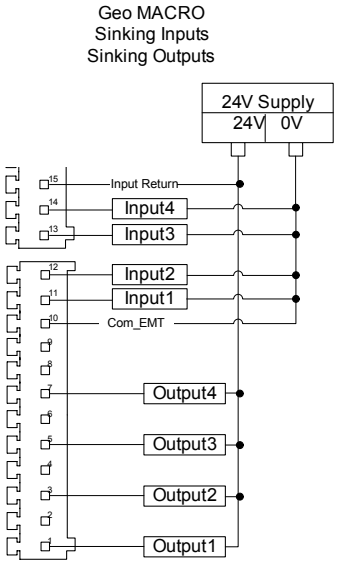

Sample Wiring the Flags

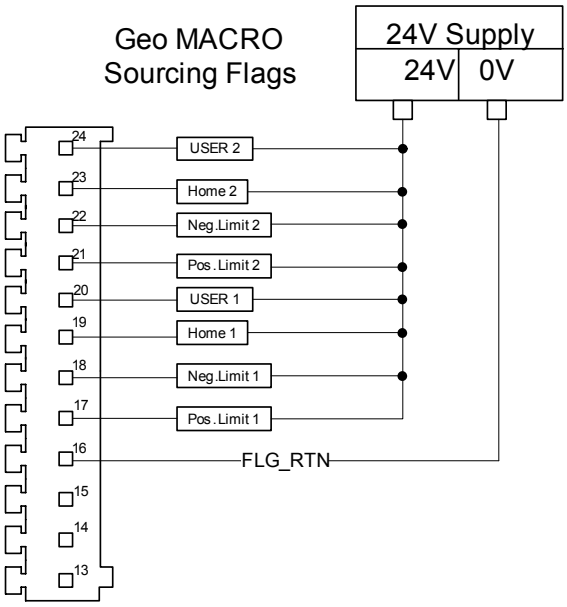

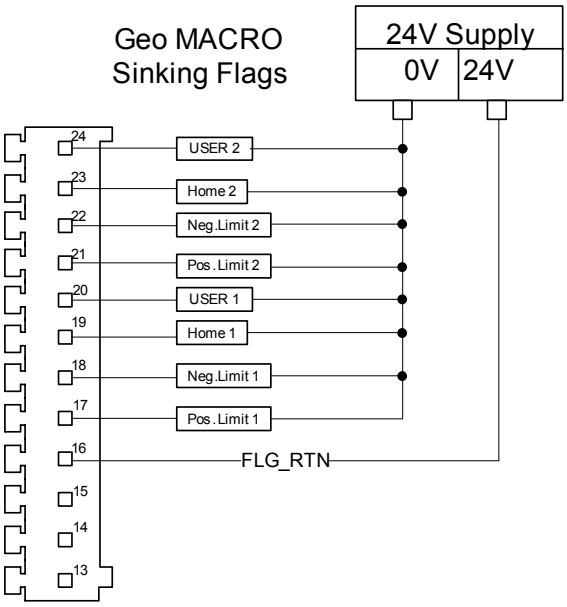

Function	Pin #
FLG_RTN	16
PLIM1	17
NLIM1	18
HOME1	19
USER1	20
PLIM2	21
NLIM2	22
HOME2	23
USER2	24

Connecting MACRO Ring

Fiber Optic MACRO connections (X5)

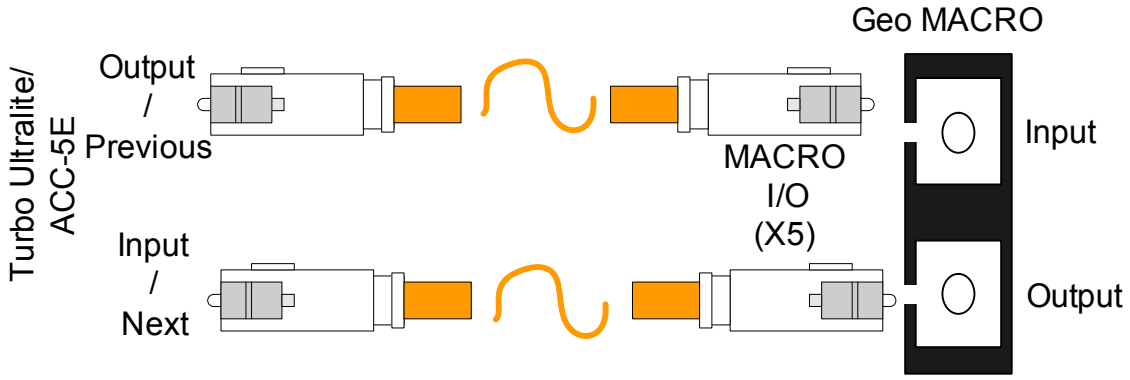

RJ-45 Copper MACRO connections (X10 &X11)

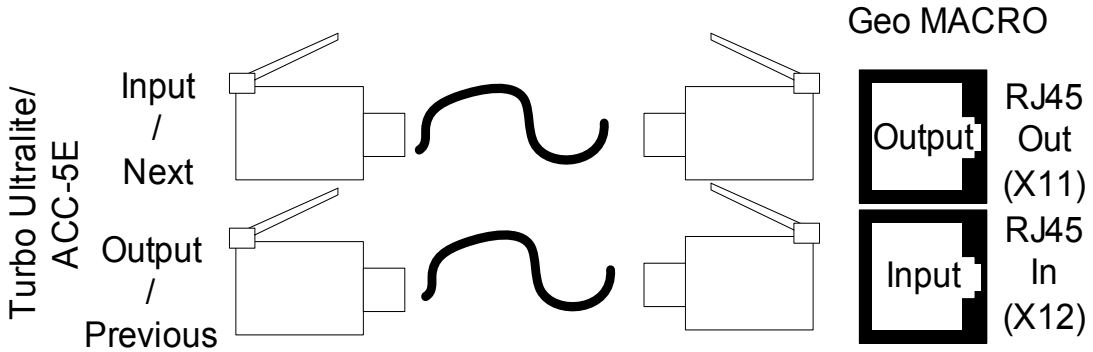

Connecting optional Analog Inputs (X6 & X7)

The MACRO Geo Drive can be ordered with two analog to digital converters (option 3/4/5). These A/D converters are 16-bit devices that are ready to be used without any software setup. Delta Tau uses the Burr Brown ADS8343 for this circuit.

The analog signals for analog input #1 are wired in to pins 5 (ADC1+) and 9 (ADC1-) of X6, and for analog input #2 into pins 5 (ADC2+) and 9 (ADC2-) of X7.

Bipolar Analog Input

Function	Pin #
GND	4
ANALOG+	5
ANALOG-	9

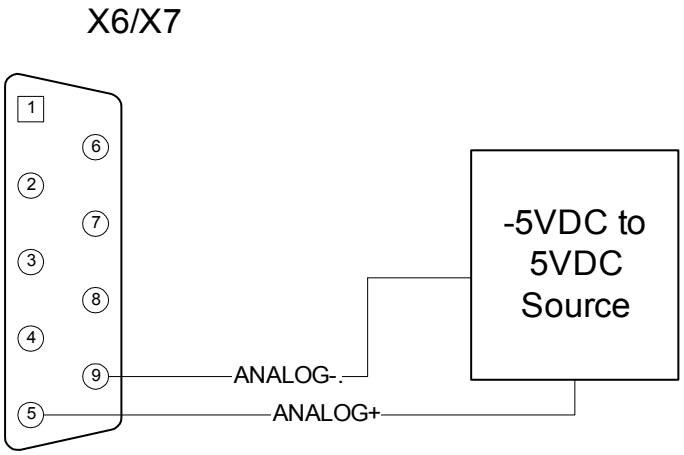

Unipolar Analog Input

Function	Pin #
GND	4
ANALOG+	5
ANALOG-	9

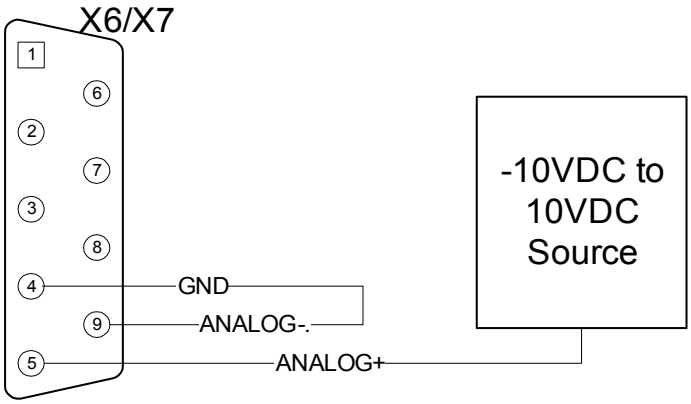

SOFTWARE SETUP FOR GEO MACRO DRIVES

Introduction

Turbo PMAC2 controllers can command axes and I/O over the MACRO ring. Most commonly, this is done with an Ultralite board-level Turbo PMAC2 controller that is installed as an expansion card in the host computer, communicating to MACRO Stations, MACRO-based drives, and/or MACRO peripheral devices over the MACRO ring. However, it is also possible for a UMAC Turbo with the ACC-5E MACRO interface, to command devices over the MACRO ring.

It is advisable to the user to use the Turbo Setup program to set up his Geo MACRO application(MACRO communications, feedback setup, commutation, and motor setup), or to use the MACRO Ring ASCII setup tool which comes with the PEWIN32PRO2 and sets up the MACRO communications, and displays to the user some useful information about his system. Sample screens and procedures for these programs are shown in the following section

Establishing MACRO Communications with Turbo PMAC

Several variables must be set up properly for proper ring operation. Usually, this is done automatically through use of the Turbo Setup program or with the new application tool PEWIN32PRO2 MACRO Ring ASCII on a PC. The following instructions permit direct manual setting of these variables.

MACRO Ring Frequency Control Variables

The MACRO ring update frequency is the phase clock frequency of the ring master controller. If there is more than one Turbo PMAC2 controller on the ring, only one of them can be the ring master controller (others are masters, but not ring masters). Of course, if there is only one Turbo PMAC2 controller on the ring, it will be the ring master controller. Determining which Turbo PMAC2 (technically, which MACRO IC on a Turbo PMAC2) is ring master is explained below.

While the ring master has the capability to force the clock generation of other devices on the ring into synchronization, it is strongly recommended that all devices on the ring, both other Turbo PMAC2 controllers, and any slave devices, be set up for the same phase clock frequency. Determining which IC sets the phase clock frequency and the actual setting the phase clock frequency for a Turbo PMAC2 controller is explained above.

For a Turbo PMAC2 driving a MACRO ring, MACRO IC 0 should generate the phase clock signal. This means that I19 should be set to 6807 (which it will be by default on virtually any Turbo PMAC2 capable of driving a MACRO ring), and that I6800 and I6801 set the phase clock frequency.

I7: Phase Cycle Extension

On the Turbo PMAC2 board, it is possible to skip hardware phase clock cycles between executions of the phase update software. A Turbo PMAC2 board will execute the phase update software – commutation and/or current-loop closure – every (I7+1) hardware phase clock cycles. The default value for I7 is 0, so normally Turbo PMAC2 executes the phase update software every hardware phase clock cycle.

If the Turbo PMAC2 board is closing the current loop for direct PWM control over the MACRO ring, it is desirable to have two hardware ring update cycles (which occur at the hardware phase clock frequency) per software phase update. This eliminates one ring cycle of delay in the current loop, which permits slightly higher gains and performance. To do this, I7 would be set to 1, so the phase update software would execute every second hardware phase clock cycle, and ring update cycle.

Normally it is desirable to close the current loop at an update rate of about 9 kHz (the default rate). If two ring updates were desired per current loop update, the ring update frequency would need to be set to 18 kHz. This is possible if there are no more than 40 total active nodes on the ring. To implement this, I6800 would be set to one-half of the default value, and I6801 to the default value of 0.

Note:

When making this change, change the Turbo PMAC2's I6800 variable first, then the MACRO Station's MI992. Changing the MACRO Station's MI992 alone, followed by an **MSSAVE<node>** command and an **MS$$$<node>**, could cause the Station's watchdog timer to trip.

I6840: MACRO IC 0 Master Configuration

Any MACRO IC on a Turbo PMAC2 talking to a MACRO Station must be configured as a master on the ring. For purposes of the MACRO protocol, each MACRO IC is a separate logical master with its own master number, even though there may be multiple MACRO ICs on a single physical Turbo PMAC2.

Each ring must have one and only one ring controller (synchronizing master). This should be the MACRO IC 0 one and only one of the Turbo PMAC2 boards on the ring.

On a Turbo PMAC2, set I6840 to $30 to make the card's MACRO IC 0 the ring controller. This sets bits 4 and 5 of the variable to 1. Setting bit 4 to 1 makes the IC a master on the ring; setting bit 5 to 1 makes the IC the ring controller" starting each ring cycle by itself.

On a Turbo PMAC2 whose MACRO IC 0 will be a master but not ring controller, I6840 should be set to $90. This sets bits 4 and 7 of the variable to 1. Setting bit 4 to 1 makes the IC a master on the ring; setting bit 7 to 1 will cause this IC to be synchronized to the ring controller IC every time it receives a ring packet specified by I6841.

I6890/I6940/I6990: MACRO IC 1/2/3 Master Configuration

A Turbo PMAC2 Ultralite may have additional MACRO ICs if Options 1U1, 1U2, and/or 1U3 are ordered. A UMAC Turbo system may have additional MACRO ICs if Option 1 on an Acc-5E is ordered, or if multiple Acc-5E boards are ordered. These additional ICs should be set to be masters but not ring controllers by setting I6890, I6940, and I6990, respectively to $10. This sets bit 4 of the variable to 1, making the IC a master on the ring. These ICs should never be synchronizing masters, and since they do not control the clock signals on their own board, their internal clocks do not need to be synchronized to the ring (only MACRO IC 0 needs to do this).

I6841/I6891/I6941/I6991: MACRO IC 0/1/2/3 Node Activation Control

I6841, I6891, I6941, and I6991 on Turbo PMAC2 control which of the 16 MACRO nodes for MACRO ICs 0, 1, 2, and 3, respectively, on the card are activated. They also control the master station number for their respective ICs, and the node number of the packet that creates a synchronization signal. The bits of these I-variables are arranged as follows:

Bits 0-15: Activation of MACRO Nodes 0 to 15, respectively (1 = active, 0 = inactive). These 16 bits (usually read as four hex digits) individually control the activation of the MACRO nodes in the MACRO IC on a Turbo PMAC2. Each node that is active on the matching MACRO Station, whether for servo, I/O, or auxiliary communications, should have its node activation bit set to 1.

When working with a Delta Tau MACRO Station, Node 15 of each MACRO IC on a Turbo PMAC2 must be activated to permit auxiliary communications, so bit 15 of this variable should always be set to 1 if the IC is used to communicate with a MACRO Station.

Bits 16-19: Packet Sync Node Slave Number. These four bits together (usually read as one hex digit) form the slave number (0 to 15) of the packet whose receipt by the PMAC2 will set the Sync Packet Received status bit in the MACRO IC. Usually, this digit is set to $F (15), because Node 15 is always activated.

Turbo PMAC2 must see this bit set regularly; otherwise it will assume ring problems and shut down servo and I/O outputs on the ring. Bit 7 of I6840 must be set to 1 on the MACRO IC 0 of all Turbo PMAC2s that are not ring controllers to enable the synchronization of their phase clocks to that of the ring controller based on receipt of the sync packet.

Bits 20-23: Master Number. These four bits together form the master number (0 to 15) of the MACRO IC on the MACRO ring. Each MACRO IC acting as a master on the ring, whether on the same card or different cards, must have its own master number, and acts as a separate master station for the purposes of the ring protocol. This master number forms half of the address byte with each packet sent by the PMAC2 over the MACRO ring.

The master number can be the same number as the MACRO IC number (e.g. MACRO IC 0 has master number 0, MACRO IC 1 has master number 1, and so on), and if there is only one Turbo PMAC2 in the ring, this probably will be the case. However, this is not required. The MACRO IC that is the ring controller must have master number 0 if Type 1 master-to-master auxiliary communications are to be used.

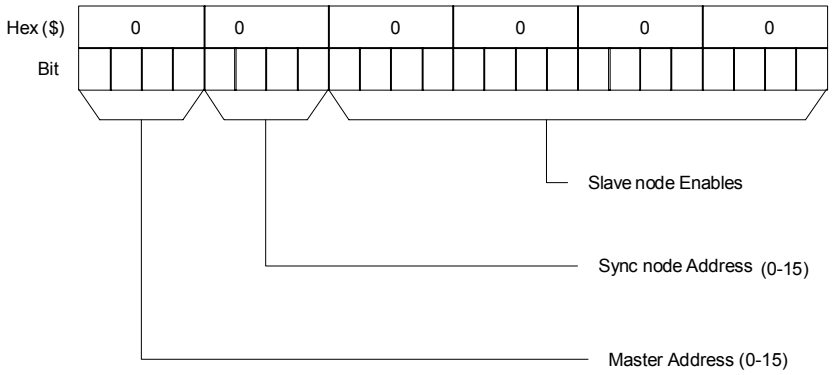

The table shown in an above section and in the Hardware Reference Manual for the 3U MACRO Station's SW1 switch setting provides a starting point for the Turbo PMAC2's I6841/I6891/I6941/I6991 value. Additional bits of these I-variables may be set to 1 if I/O nodes are enabled or if more than one 3U MACRO station is commanded from a single MACRO IC.

I70/I72/I74/I76: MACRO IC 0/1/2/3 Node Auxiliary Function Enable

I70, I72, I74, and I76 are 16-bit I-variables (bits 0 - 15) in which each bit controls the enabling or disabling of the auxiliary flag function for the MACRO node number matching the bit number for MACRO ICs 0, 1, 2, and 3, respectively. A bit value of 1 enables the auxiliary flag function; a bit value of 0 disables it. If the function is enabled, PMAC automatically copies information between the MACRO interface flag register and RAM register $00344*n*, $00345*n*, $00346*n*, and $00347*n* (where *n* is the IC's node number 0 – 15) for MACRO ICs 0, 1, 2, and 3, respectively.

Note that Turbo PMAC MACRO node numbers (as opposed to individual MACRO IC node numbers) go from 0 to 63, with board nodes 0 – 15 on MACRO IC 0, board nodes 16 – 31 on MACRO IC 1, board nodes 32 – 47 on MACRO IC 2, and board nodes 48 – 63 on MACRO IC 3.

Each MACRO node *n* that is used for servo functions should have the corresponding bit *n* of I70, I72, I74, or I76 set to 1. I*xx*25 for the Motor *x* that uses Node *n* should then address $00344*n*, $00345*n*, $00346*n*, or $00347*n*, not the address of the MACRO register itself (see below). If Register 3 of a MACRO node *n* is used for other purposes, such as direct I/O, the corresponding bit *n* of I70, I72, I74, or I76 should be set to 0, so this copying function does not overwrite these registers.

Typically, non-servo I/O functions with a MACRO Station do not involve auxiliary flag functions, so this flag copy function should remain disabled for any node used to transmit I/O between the Turbo PMAC2 and the MACRO Station. If any auxiliary communications is done between the Turbo PMAC2 and the MACRO Station on Nodes 14 and/or 15, bits 14 and 15 of these variables must be set to 0.

Examples:

```
I70=$3                  ; Enabled for MACRO IC 0, Nodes 0 and 1

I72=$30                 ; Enabled for MACRO IC 1, Nodes 4 and 5

I74=$3300               ; Enabled for MACRO IC 2, Nodes 8,9,12,13
```

```
I76=$3333                ; Enabled for MACRO IC 3, Nodes     0,1,4,5,8,9,12,13
```

I71/I73/I75/I77: MACRO IC 0/1/2/3 Node Protocol Type Control

I71, I73, I75, and I77 are 16-bit I-variables (bits 0 - 15) in which each bit controls whether PMAC uses the uses MACRO Type 0 protocol or the MACRO Type 1 protocol for the node whose number matches the bit number for the purposes of the auxiliary servo flag transfer for MACRO ICs 0, 1, 2, and 3, respectively. A bit value of 0 sets a Type 0 protocol; a bit value of 1 sets a Type 1 protocol.

All 3U MACRO Station nodes use the Type 1 protocol, so each MACRO node *n* used for servo purposes with a MACRO Station must have bit *n* of I1002 set to 1. Generally I71 = I70, I73 = I72, I75 = I74, and I77 = I76 on a Turbo PMAC2 communicating with a MACRO Station.

Remember that if servo nodes for more than one MACRO Station are commanded from a single MACRO IC, the protocol must be selected for all of the active servo nodes on each station.

I78: MACRO Master/Slave Auxiliary Communications Timeout

If I78 is set greater than 0, the MACRO Type 1 Master/Slave Auxiliary Communications protocol using Node 15 is enabled. Turbo PMAC implements this communications protocol using the **MACROSLAVE** (**MS**), **MACROSLVREAD** (**MSR**), and **MACROSLVWRITE** (**MSW**) commands.

If this function is enabled, I78 sets the timeout value in PMAC servo cycles. In this case, if PMAC does not get a response to a Node 15 auxiliary communications command within I78 servo cycles, it will stop waiting and register a MACRO auxiliary communications error, setting Bit 5 of global status register X:$000006.

I78 must be set greater than 0 if any auxiliary communications is desired with a MACRO Station. This reserves Node 15 for the Type 1 Auxiliary Communications. A value of 32 is suggested. If I78 is set greater than 0, bit 15 of I70, I72, I74, and I76 must be set to 0, so Node 15 is not used for flag transfers also.

I79: MACRO Master/Master Auxiliary Communications Timeout

If I79 is set greater than 0, the MACRO Type 1 Master/Master Auxiliary Communications protocol using Node 14 is enabled. Turbo PMAC implements this communications protocol using the **MACROMASTER** (**MM**), **MACROMSTREAD** (**MMR**), and **MACROMSTWRITE** (**MMW**) commands. Only the Turbo PMAC that is the "ring controller" can execute these commands; other Turbo PMACs that are masters on the ring can respond to these commands from the ring controller.

If this function is enabled, I79 sets the "timeout" value in PMAC servo cycles. In this case, if the Turbo PMAC does not get a response to a Node 14 master/master auxiliary communications command within I79 servo cycles, it will stop waiting and register a "MACRO auxiliary communications error," setting Bit 5 of global status register X:$000006.

I79 must be set greater than 0 if any auxiliary communications is desired with a MACRO Station. A value of 32 is suggested. If a value of I79 greater than 0 has been saved into PMAC's non-volatile memory, then at subsequent power-up/resets, bit 14 of I70 is set to 0, the node-14 broadcast bit (bit 14 of I6840) is set to 1, and activation bit for node 14 (bit 14 of I6841) is set to 1, regardless of the value saved for these variables. This reserves Node 14 of MACRO IC 0 for the Type 1 Master/Master Auxiliary Communications.

I80, I81, I82: MACRO Ring Check Period and Limits

If I80 is set to a value greater than zero, Turbo PMAC will monitor for MACRO ring breaks or repeated MACRO communications errors automatically. A non-zero value sets the error detection cycle time in Turbo PMAC servo cycles. Turbo PMAC checks to see that "sync node" packets (see I6840 and I6841) are received regularly, and that there have not been regular communications errors.

The limits for these checks can be set with variables I81 and I82. If less than I82 sync node packets have been received and detected during this time interval, or if I81 or more ring communications errors have

been detected in this interval, Turbo PMAC will assume a major ring problem, and all motors will be shut down. Turbo PMAC will set the global status bit "Ring Error" (bit 4 of X:$000006) as an indication of this error.

Turbo PMAC looks for receipt of sync node packets and ring communications errors once per real-time interrupt – every (I8 + 1) servo cycles). The time interval set by I80 must be large enough that I82 real-time interrupts in PMAC can execute within the time interval, or false ring errors will be detected. Remember that long motion program calculations can cause skips in the real-time interrupt. Typically values of I80 setting a time interval of about 20 milliseconds are used. I80 can be set according to the formula:

I80 = Desired cycle time (msec) * Servo update frequency (kHz)

For example, with the default servo update frequency of 2.26 kHz, to get a ring check cycle interval of 20 msec, I80 would be set to 20 * 2.26 ≅ 45.

MACRO Node Addresses

The MACRO ring operates by copying registers at high speed across the ring. Therefore, each Turbo PMAC2 master controller on the ring communicates with its slave stations by reading from and writing to registers in its own address space. MACRO hardware handles the data transfers across the ring automatically.

Starting in Turbo firmware version 1.936, the base addresses of the up to 4 MACRO ICs must be specified in I20 – I23, for MACRO IC 0 – 3 respectively. Before this, the base addresses were fixed at $078400, $079400, $07A400, and $07B400, respectively. Only UMAC Turbo systems can support any other configuration, and only rarely will another configuration be used.

The following table gives the addresses of the MACRO ring registers for Turbo PMAC2 controllers.

Note:

It is possible, although unlikely, to have other addresses in a UMAC Turbo system. In these systems, the fourth digit does not have to be 4; it can also take the values 5, 6, and 7.

Register Addresses for MACRO IC 0 with I20=$078400 (default)

	Turbo PMAC2	Addresses:	MACRO IC 0	
Node #	**Reg. 0**	**Reg. 1**	**Reg. 2**	**Reg. 3**
0	Y:$078420	Y:$078421	Y:$078422	Y:$078423
1	Y:$078424	Y:$078425	Y:$078426	Y:$078427
2	X:$078420	X:$078421	X:$078422	X:$078423
3	X:$078424	X:$078425	X:$078426	X:$078427
4	Y:$078428	Y:$078429	Y:$07842A	Y:$07842B
5	Y:$07842C	Y:$07842D	Y:$07842E	Y:$07842F
6	X:$078428	X:$078429	X:$07842A	X:$07842B
7	X:$07842C	X:$07842D	X:$07842E	X:$07842F
8	Y:$078430	Y:$078431	Y:$078432	Y:$078433
9	Y:$078434	Y:$078435	Y:$078436	Y:$078437
10	X:$078430	X:$078431	X:$078432	X:$078433
11	X:$078434	X:$078435	X:$078436	X:$078437
12	Y:$078438	Y:$078439	Y:$07843A	Y:$07843B
13	Y:$07843C	Y:$07843D	Y:$07843E	Y:$07843F
14	X:$078438	X:$078439	X:$07843A	X:$07843B
15	X:$07843C	X:$07843D	X:$07843E	X:$07843F

Register Addresses for MACRO IC 1 with I21=$079400 (default)

	Turbo PMAC2	Addresses:	MACRO IC 1	
Node #	**Reg. 0**	**Reg. 1**	**Reg. 2**	**Reg. 3**
0	Y:$079420	Y:$079421	Y:$079422	Y:$079423
1	Y:$079424	Y:$079425	Y:$079426	Y:$079427
2	X:$079420	X:$079421	X:$079422	X:$079423
3	X:$079424	X:$079425	X:$079426	X:$079427
4	Y:$079428	Y:$079429	Y:$07942A	Y:$07942B
5	Y:$07942C	Y:$07942D	Y:$07942E	Y:$07942F
6	X:$079428	X:$079429	X:$07942A	X:$07942B
7	X:$07942C	X:$07942D	X:$07942E	X:$07942F
8	Y:$079430	Y:$079431	Y:$079432	Y:$079433
9	Y:$079434	Y:$079435	Y:$079436	Y:$079437
10	X:$079430	X:$079431	X:$079432	X:$079433
11	X:$079434	X:$079435	X:$079436	X:$079437
12	Y:$079438	Y:$079439	Y:$07943A	Y:$07943B
13	Y:$07943C	Y:$07943D	Y:$07943E	Y:$07943F
14	X:$079438	X:$079439	X:$07943A	X:$07943B
15	X:$07943C	X:$07943D	X:$07943E	X:$07943F

Register Addresses for MACRO IC 2 with I22=$07A400 (default)

	Turbo PMAC2	Addresses:	MACRO IC 2	
Node #	**Reg. 0**	**Reg. 1**	**Reg. 2**	**Reg. 3**
0	Y:$07A420	Y:$07A421	Y:$07A422	Y:$07A423
1	Y:$07A424	Y:$07A425	Y:$07A426	Y:$07A427
2	X:$07A420	X:$07A421	X:$07A422	X:$07A423
3	X:$07A424	X:$07A425	X:$07A426	X:$07A427
4	Y:$07A428	Y:$07A429	Y:$07A42A	Y:$07A42B
5	Y:$07A42C	Y:$07A42D	Y:$07A42E	Y:$07A42F
6	X:$07A428	X:$07A429	X:$07A42A	X:$07A42B
7	X:$07A42C	X:$07A42D	X:$07A42E	X:$07A42F
8	Y:$07A430	Y:$07A431	Y:$07A432	Y:$07A433
9	Y:$07A434	Y:$07A435	Y:$07A436	Y:$07A437
10	X:$07A430	X:$07A431	X:$07A432	X:$07A433
11	X:$07A434	X:$07A435	X:$07A436	X:$07A437
12	Y:$07A438	Y:$07A439	Y:$07A43A	Y:$07A43B
13	Y:$07A43C	Y:$07A43D	Y:$07A43E	Y:$07A43F
14	X:$07A438	X:$07A439	X:$07A43A	X:$07A43B
15	X:$07A43C	X:$07A43D	X:$07A43E	X:$07A43F

Register Addresses for MACRO IC 3 with I23=$07B400 (default)

	Turbo PMAC2	Addresses:	MACRO IC 3	
Node #	**Reg. 0**	**Reg. 1**	**Reg. 2**	**Reg. 3**
0	Y:$07B420	Y:$07B421	Y:$07B422	Y:$07B423
1	Y:$07B424	Y:$07B425	Y:$07B426	Y:$07B427
2	X:$07B420	X:$07B421	X:$07B422	X:$07B423
3	X:$07B424	X:$07B425	X:$07B426	X:$07B427
4	Y:$07B428	Y:$07B429	Y:$07B42A	Y:$07B42B
5	Y:$07B42C	Y:$07B42D	Y:$07B42E	Y:$07B42F
6	X:$07B428	X:$07B429	X:$07B42A	X:$07B42B
7	X:$07B42C	X:$07B42D	X:$07B42E	X:$07B42F
8	Y:$07B430	Y:$07B431	Y:$07B432	Y:$07B433
9	Y:$07B434	Y:$07B435	Y:$07B436	Y:$07B437
10	X:$07B430	X:$07B431	X:$07B432	X:$07B433
11	X:$07B434	X:$07B435	X:$07B436	X:$07B437
12	Y:$07B438	Y:$07B439	Y:$07B43A	Y:$07B43B
13	Y:$07B43C	Y:$07B43D	Y:$07B43E	Y:$07B43F
14	X:$07B438	X:$07B439	X:$07B43A	X:$07B43B
15	X:$07B43C	X:$07B43D	X:$07B43E	X:$07B43F

Note:

With the MACRO station, only nodes that map into Turbo PMAC2 Y registers (0, 1, 4, 5, 8, 9, 12, and 13) can be used for servo control. These nodes are unshaded in the above table. The nodes that map into X registers (2, 3, 6, 7, 10, 11, and 14) can be used for I/O control. Node 15 is reserved for Type 1 auxiliary communications. Node 14 is often reserved for broadcast communications.

Using the Turbo PMAC Setup Program

The following captured screens are taken from the Turbo Setup program.

First the user needs to start the Turbo Setup Application. From the **Menu Bar** move the mouse over the **"Tools"** and select with double click the **"Turbo/UMAC Setup Pro (2)"**

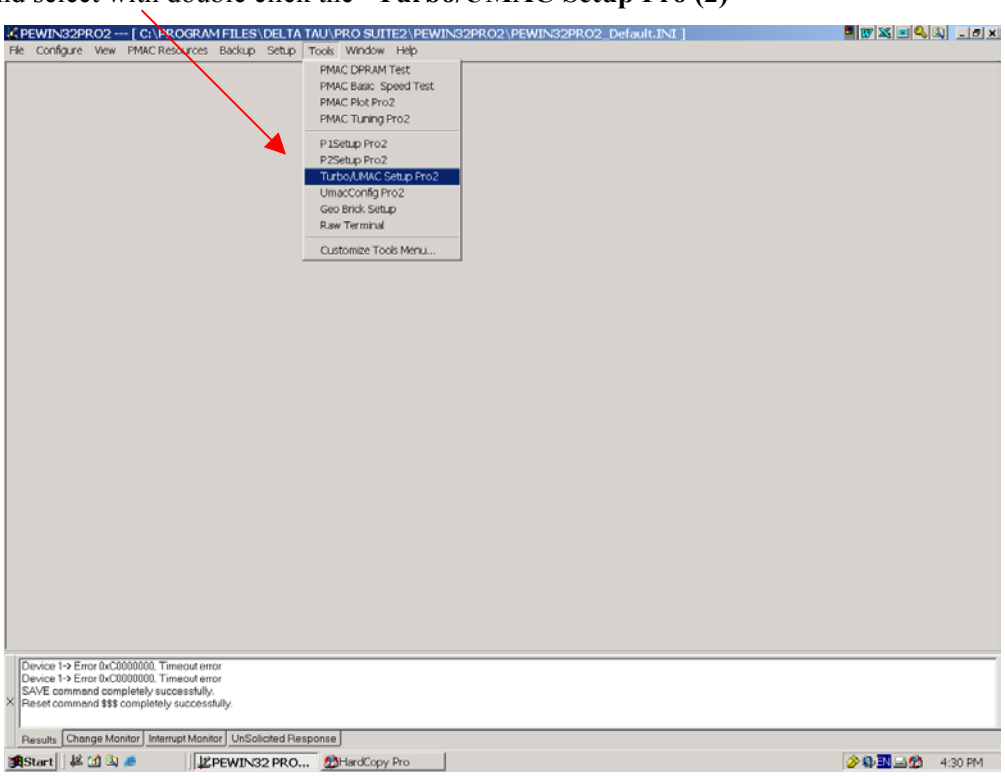

Another way to start the Turbo Setup Application the user can double click

the Turbo Setup shortcut on the desktop.

So as to use the Geo MACRO drive: Turbo Ultralite, UMAC MACRO or QMAC with MACRO option needs to be used, and if they do then at the first pop up window, user needs to click **Yes**. If your system doesn't use any of the above Controllers then Turbo Setup cannot be used, click **No**

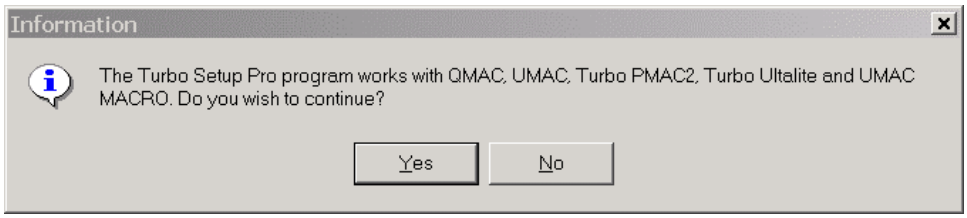

Then the first step is to select the kind of communications you have established with your PMAC device that would be used as your Controller.

- UMAC and QMAC controllers can communicate to the PC via **Serial Port**, **USB** and **Ethernet**
- Turbo PMAC2 Ultralite controllers have two versions: the older ISA Bus and the newer PCI bus
    - The ISA boards can communicate to the PC via **Serial Port** and **ISA Bus** (manual registration).
    - The PCI boards can communicate to the PC via **Serial Port** and **PCI Bus**. (Plug and Play)

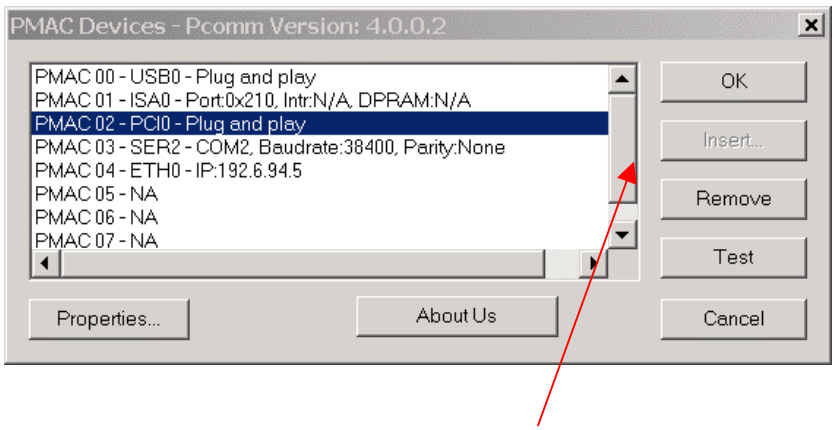

If there are no Devices on the list, then the user needs to **Insert** new devices.

For more information and details about the Communication of the devices, please read the appropriate manual:

- PEWIN32 PRO

  http://www.deltatau.com/fmenu/PEWIN32%20PRO.PDF
- PEWIN32 PRO Suite 2
  http://www.deltatau.com/fmenu/PEWIN%2032%20PRO%202%20SOFTWARE.PDF

After you select the communications scheme, double click on the **Test** button and if everything is set correct then a pop-up window will show saying that "the PMAC was successfully founded". Press **ok** and the Turbo Setup Application starts.

The first setup screen is to set some information about your PMAC controller and the ACCessories that are used. Currently there are only two options that can be used with Geo MACRO drives.

Turbo/UMAC MACRO or **QMAC**

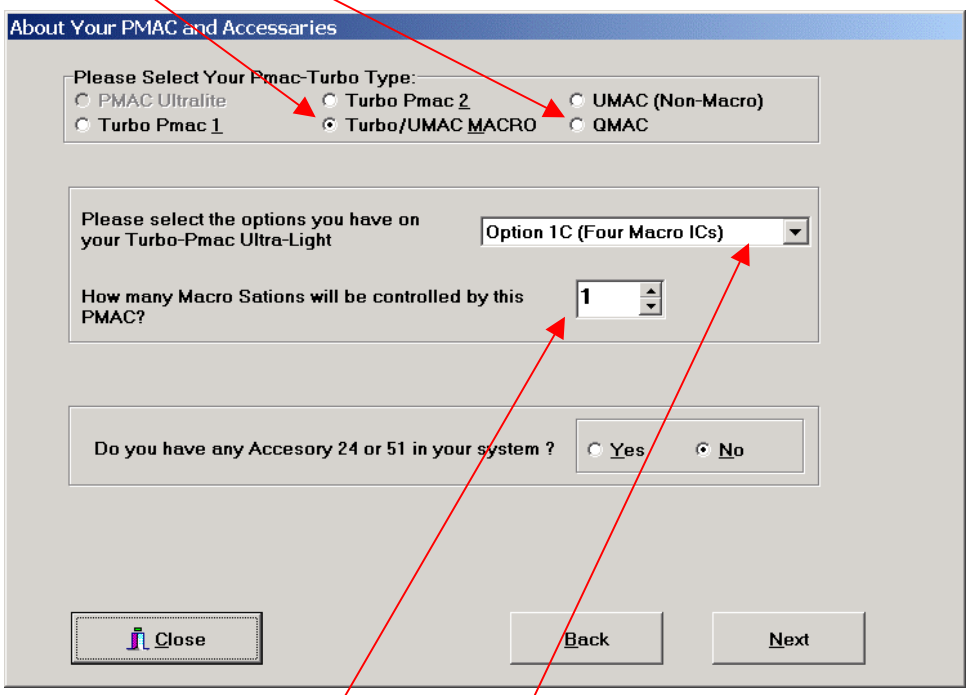

On the same setup screen the user needs to select **how many MACRO** ICs the used Turbo Ultralite or ACC-5E have installed, and **how many MACRO Stations** will be controlled. If UMAC MACRO is used then the user needs to know if he has in his UMAC rack an ACC-24E or/and ACC-51E. After selecting all the correct options (appropriate to your system) click the **Next** button.

A pop up window will show asking you if your Geo MACRO drive is a 16-axis MACRO station. Geo MACRO drives are neither 16-axis nor 8-axis MACRO stations. Geo MACRO drives use special MACRO CPU. So click on the **No** button.

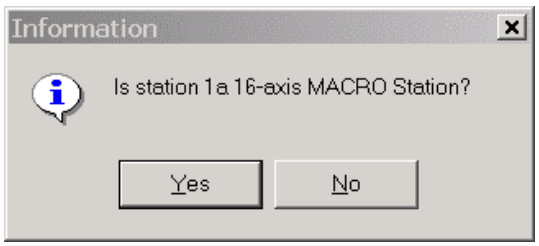

The next window that will appear is to set up your PWM frequency.

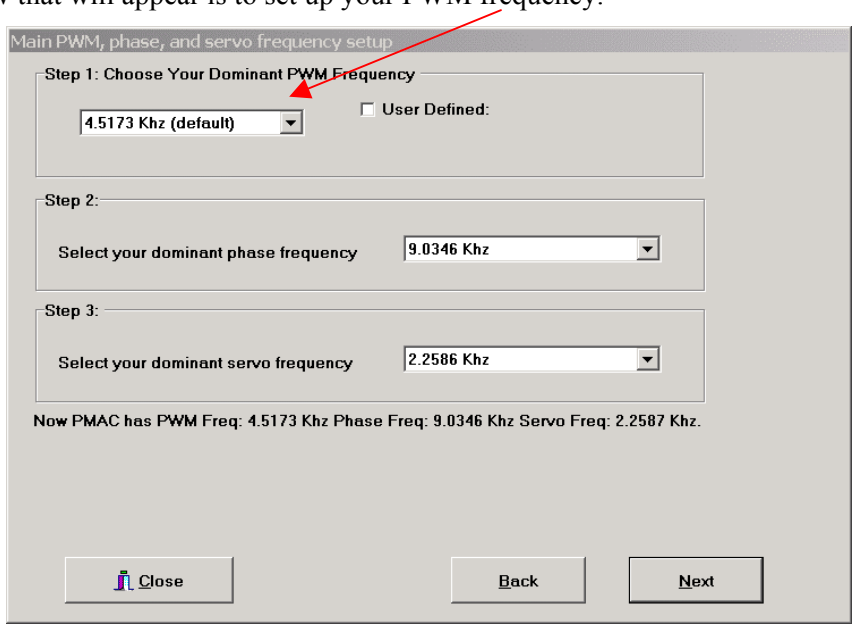

After you select the dominant PWM frequency, click on **Next.**

A new setup screen will appear to **Assign your MACRO Master number to the MACRO IC's**. For most of the systems default values are good.

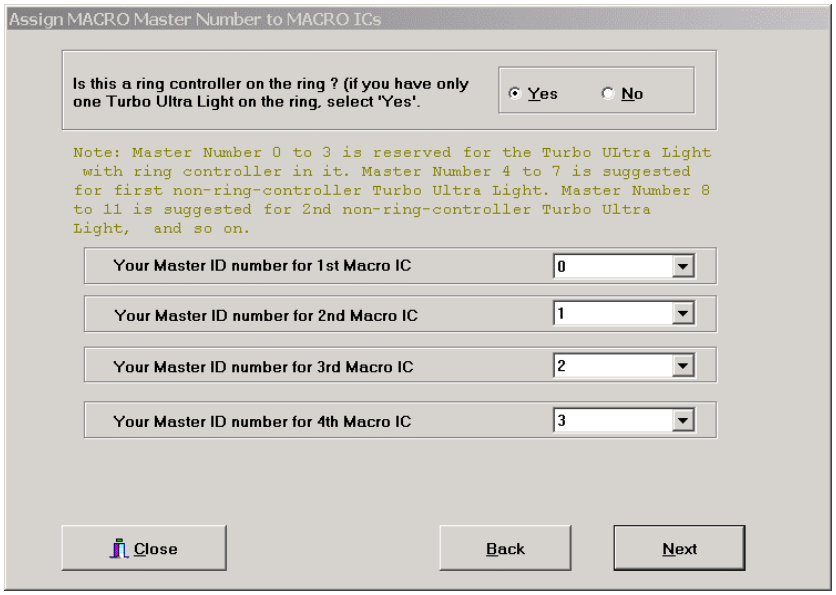

The following screen of the Setup program selects which method to use to bind the MACRO stations to the MACRO controller.

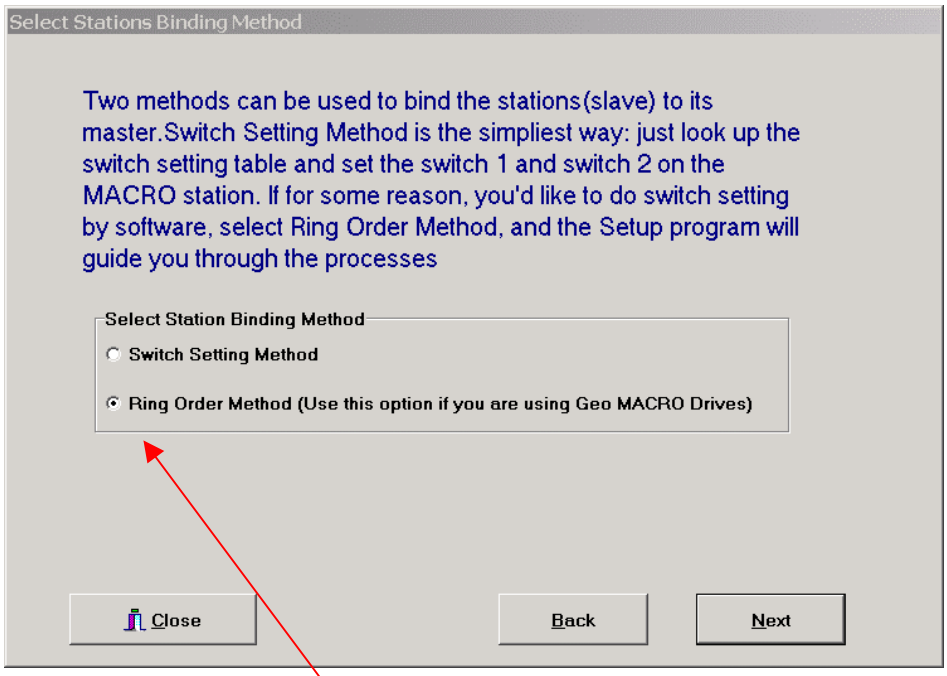

Geo MACRO drives are using the **Ring Order Method**. After clicking the **Next** button the program will use some time for its calculations.

The setup program will come back with any MACRO stations that were found with the Ring order Method. **MS<node>,MI996** needs to be set <u>manually</u> on this screen to enable the nodes.

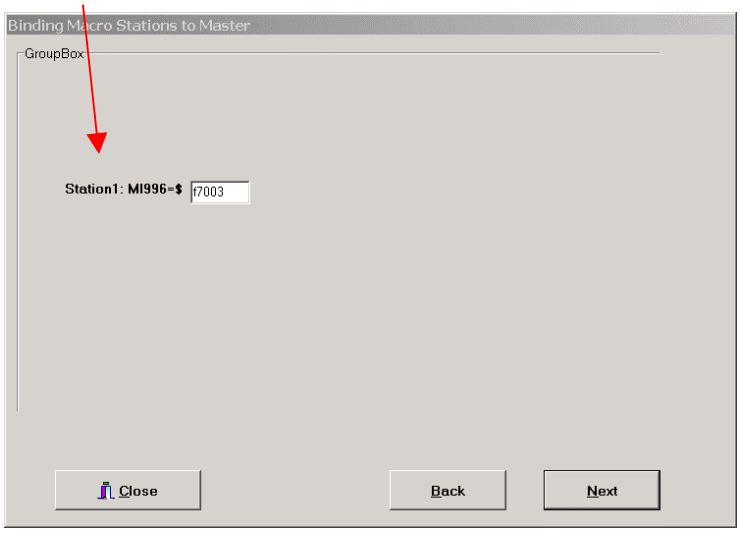

MI996 controls which of the MACRO nodes on the Geo MACRO Station are activated. It also controls the master station number, and the node number of the packet that creates a synchronization signal.

Bits 0 to 15 are individual control bits for the matching node number 0 to 15. If the bit is set to 1, the node is activated; if the bit is set to 0, the node is de-activated. Node 15 should always be activated to support the Type 1 auxiliary communications.

Bits 16-19 specify the slave number of the packet which will generate the “sync pulse” on the Geo MACRO Station. This is always set to 15 ($F) on the Geo MACRO Station.

Bits 20-23 specify the master number (0-15) for the Geo MACRO Station. At power-up/reset, these bits get the value set by SW2. The number must be specified whether the card is a master station or a slave station.

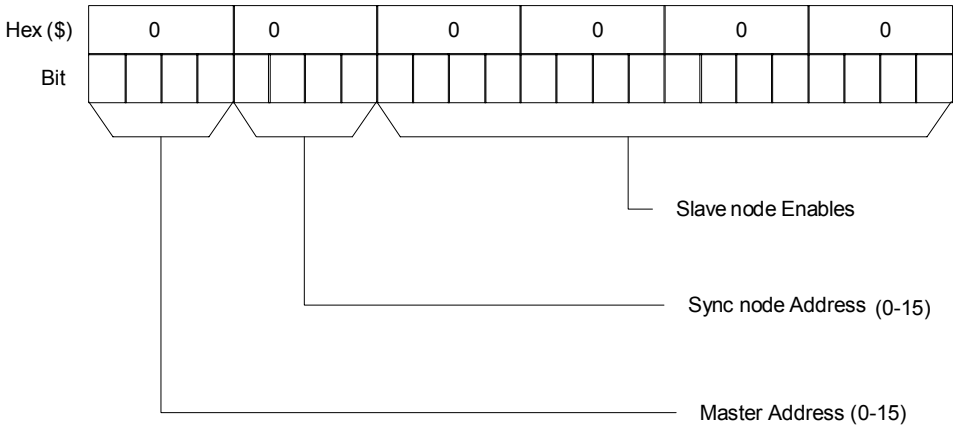

After setting the correct value to the MI996, click the **Next** button to move on.

The Setup software will come up with a new pop-up window asking if it is a Geo MACRO drive. You should reply by clicking the **Yes** button**.**

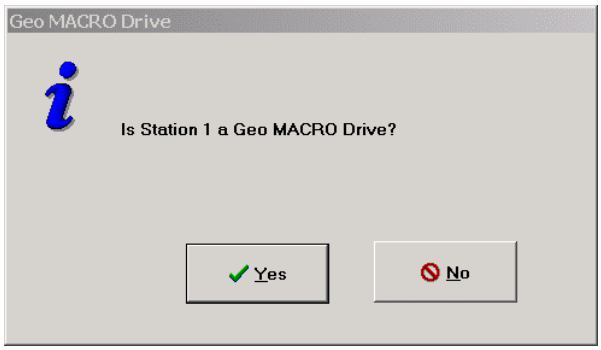

All the screens following are the Steps to setup your motors, so check the boxes and enter the correct data to the questions, to setup, phase and tune your motors. There are 23 steps.

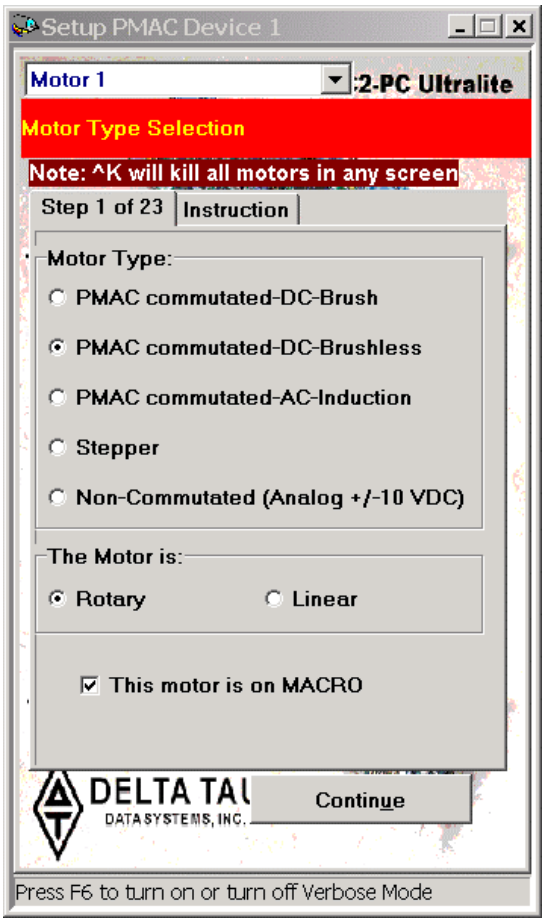

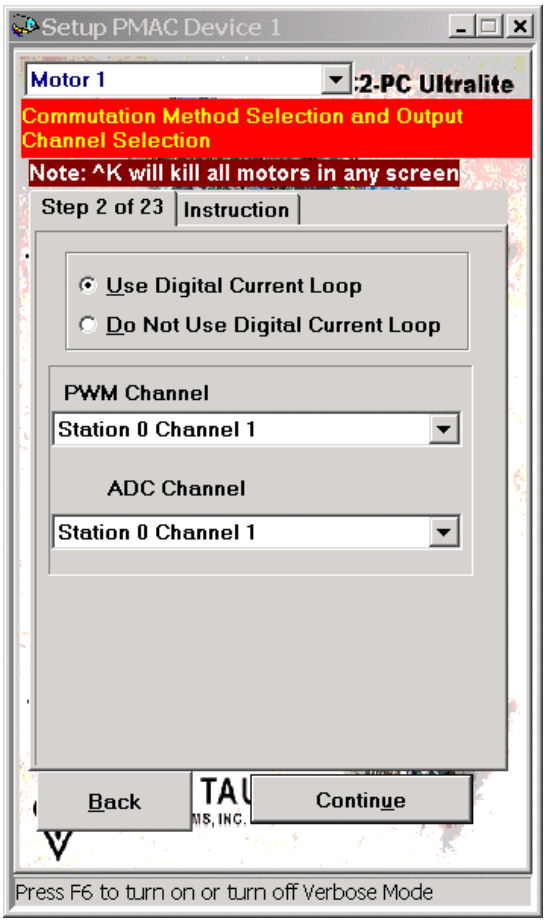

Note:

Geo Drives are using Digital Current Loop, with PWM outputs

User needs with the current version of Turbo Setup (before 9/1/05) to manually edit at the terminal window MI101 and MI102 for the Encoders

Using the PEWIN32PRO 2 MACRO Ring ASCII Feature

With the new PEWIN32PRO Suite2 a new configuration application has been added to initiate the MACRO Ring ASCII communication between the Ring Controller and other Slave stations and/or secondary Masters/Slaves. This new application allows the user to setup the Ring Controller, detect or reinitialize all other stations on the Ring, set up all communication parameters, save these parameters in a backup file, and can start or stop MACRO Ring ASCII communication to any station on the Ring.

So as to start the application you need to start your PEWIN32 PRO Suite2 and with the mouse on the Menu Bar select the **Configure** Menu and click on the **MACRO Ring ASCII**

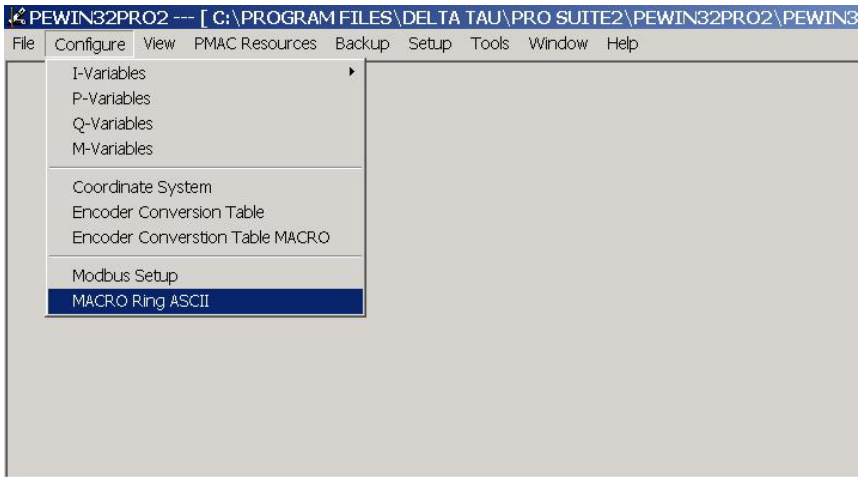

The new application starts, make sure you have selected which PMAC device the PEWIN32PRO communicates to, else with the right click on the application click on the **Select PMAC.**

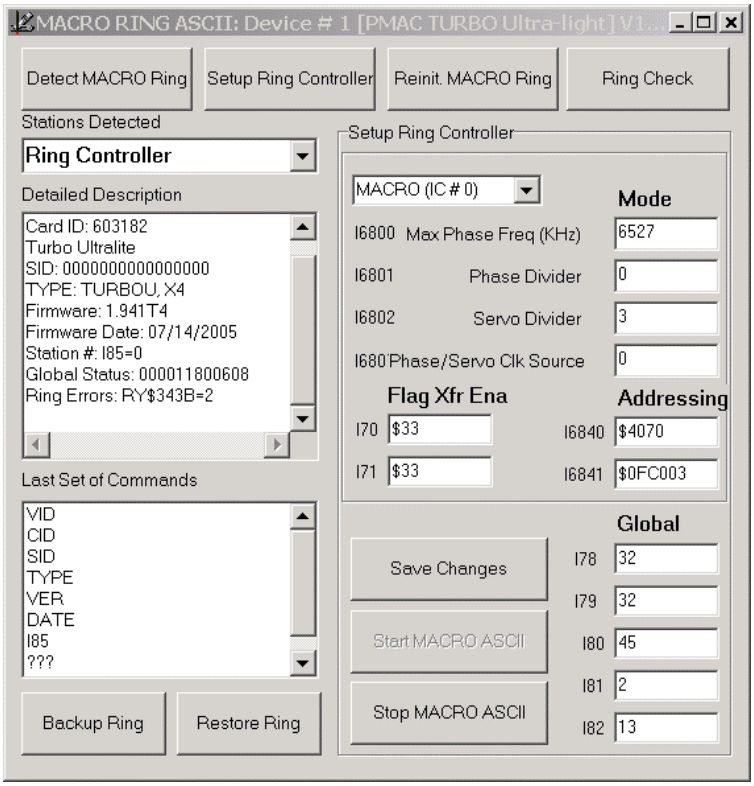

Detect MACRO Ring

Detects all MACRO IC's that are connected to the Ring.

- Ring Controller
- MACRO Station #n

Setup Ring Controller

It will re-initialize the MACRO controller (Turbo PMAC), and all clocks and nodes will be reset. It gives the option of a re-initialize and a reset.

Reinit. MACRO Ring

The program will reinitialize the MACRO stations on the ring.

Ring Check

A small troubleshooting tool for the MACRO ring communications

The first thing the user needs to do when he starts the program is to make sure that everything is

connected and powered up. Then if it is the first time he tries to setup his system, its advisable to click on the Setup Ring Controller and Click **Yes** on the pop-up window to do a global re-initialization of the Turbo PMAC controller.

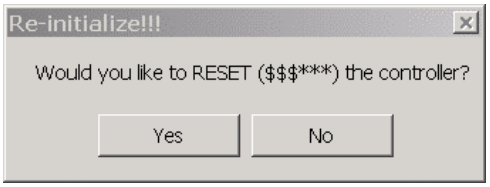

If the user wants just to do some change of values, troubleshooting or setup some new MACRO Stations then he should just press the **No** in the above window or not even press on the Setup Ring Controller and press on **Detect MACRO Ring** button. If the user wants to reinitialize every I-variable on the Turbo PMAC will be set back to factory default.

Note

If by accident or error the user pressed the **Yes** button on the reinitialize of the controller, and he wants to reverse, then he needs issue a reset "**$$$**" or a couple of seconds powercycle. This will load the last saved I-variables before the re initialization.

Do **NOT** issue a save after the re-initialize if you want to reverse; if **Save** is issued then there is no way to reverse unless the user restores with a backup file.

If the user chooses to **Detect MACRO Ring**, the program will automatically show how many Stations were detected.

The user has to first setup his Ring Controller and save any changes and then Setup each of his MACRO stations. So select at the **Stations Detected** window the Ring Controller. The Application automatically gives the user a Description of his Motion Controller Card. The window below the description, are the online commands that the Application send to the controller.

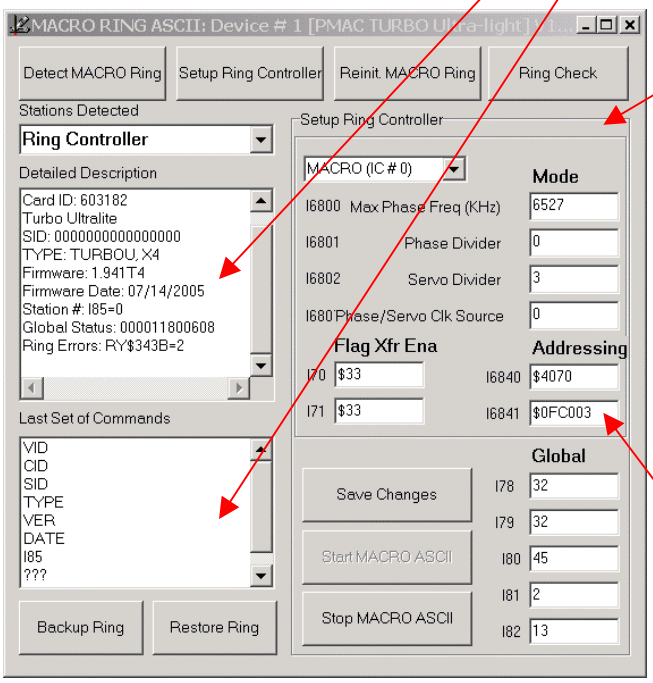

- User can select which MACRO IC he would like to setup.

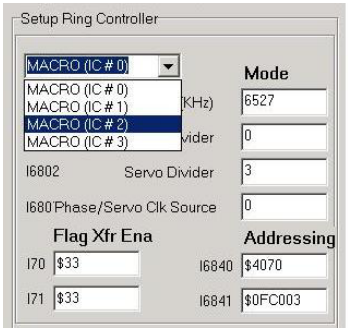

- Set the I-variables for the systems frequencies. And mainly set **I6841**. Then issue a Save Changes, **I70** & **I71** will automatically be set according to the **I6841** value.

*All the I-variables on this screen are in detail explained at the Appendix of this manual

If the user clicks on his Right mouse button on the Ring Controller Window, a new menu window will show up on screen.

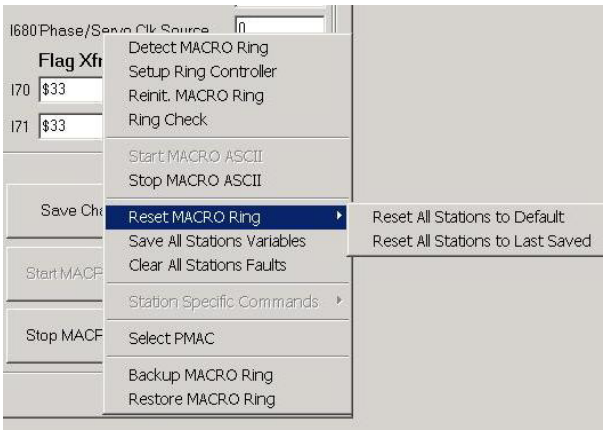

Reset All Stations to Default, sends the command MS$$$**255 and re-initializes all MACRO stations on the ring.

Reset all Stations to Last Saved, sends the online command "MS$$$255" and does a reset to the last saved by the user values. It is the same with Power cycle at all the units.

Save All Station Variables, saves all the MI-variables at the MACRO Stations.

Clear All Stations Faults, mainly sends the command "CLRF255"

Backup MACRO Ring creates a backup file with all the MACRO I-variables from all the MACRO stations on the ring.

Restore MACRO Ring downloads the backup file with all the MACRO I-variables to all the MACRO stations on the ring.

After the Ring Controller is set up the user needs to setup his MACRO Stations.

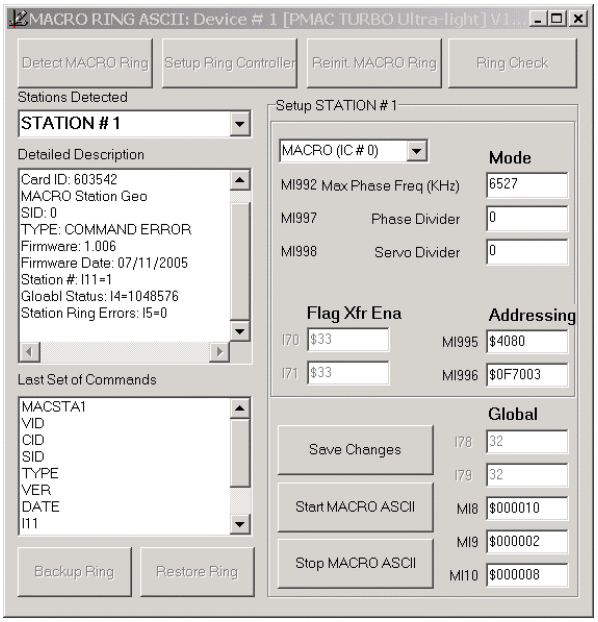

First the user needs to select which MACRO station to start with. Set the MI-variables (MI : MACRO Station I-variables), and enable the nodes with MI996.

Note

MI996 and I6841 need to comply

Then the user should click on the **Save Changes** button.

If the user clicks on his Right mouse button on the Station Window, a new menu window will show up on screen.

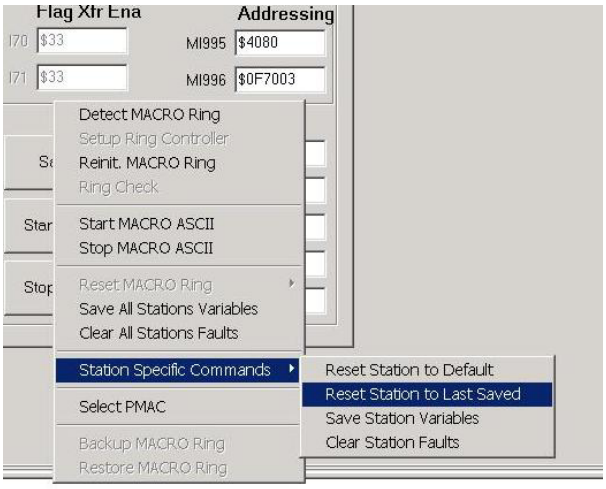

Start MACRO ASCII, it starts MACRO ASCII communications. Sends the online command "**MACSTA<node>"**

Stop MACRO ASCII, it stops MACRO ASCII communications. Sends the online command "**^T**" (Ctrl+T)

<u>Station Specific Commands</u>

Reset Station to Default, sends the command **MS$$$**<node>** and re-initializes the MACRO station #n on the ring.

Reset Station to Last Saved, sends the online command **"MS$$$<node>"** and does a reset to the last saved by the user values. It is the same with Power cycle at all the units.

Save Station Variables, it saves all the MI-variables of the station that the application currently is communicating to. The online command is "**MSSAVE<node>"**

Clear Station Faults, it clears all the faults, unless there is a hardware fault. The online command is **"CLRF<node>"**

PEWIN32PRO Suite 2 MACRO Status window

One more new addition to the new PEWIN32PRO (Suite2) is the MACRO Status window.

So as to open it, the user needs to select the View Menu from the Menu Bar and click on the MACRO Status.

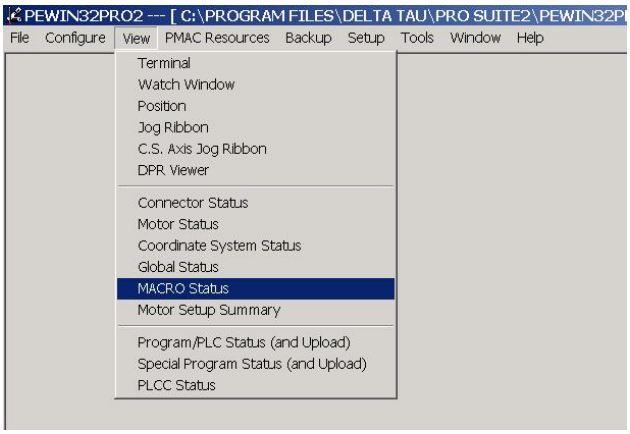

A new window will open showing the Status at the Geo MACRO Station, which is the same with **MS<node>,MI4**

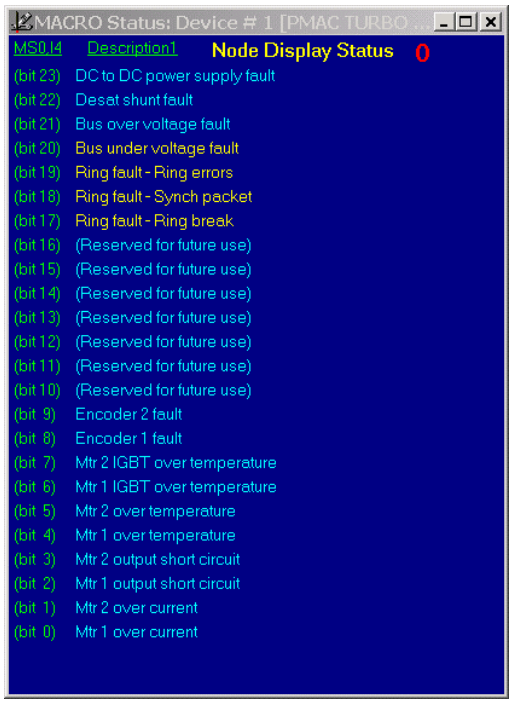

Ring Order Communications Method

The Ring Order Method has been developed to allow MACRO Devices to be set up with software. Since the Geo MACRO drive has no hardware switches (SW1 and SW2) to activate nodes and assign it to a master, the ring order method is necessary. The Turbo Setup program can do this automatically for you; thi section tells you how to do it manually.

Factory default state for the I-Variables to the Turbo Ultralite (**$$$*****) and that firmware version 1.939 or above are necessary. In addition, the Geo MACRO drive should have version 1.004 and above firmware.

1. To initiate the Ring Order Method, start with the new hardware and then enable the MACRO ASCII Communication Mode by typing **MACSTA255** in the terminal window. At this point, the Software Interface will seek the first device that has not been setup (i.e. MI11=0). Once communicating with the device, activate the nodes with MI996 and set up any critical MI-variables that need to be set for the application. Upon completion of these MI-variable settings, assign a Station Number to the device with the **STN=n** command where **n** can be set from 1 to 254. As soon a station number is assigned to the device, the system will look for the next device that has not been set up (MI11=0). If assigning a MACRO device as Station Number 20, type **STN=20** in the terminal window and MI11 will be set to 20.
   - If a Macro I/O error is received, make sure I6840, I6841 and I79 are set correctly. Also, make sure that the unit has not been already assigned a station number.
   - If the Station has been assigned a Station number already, there are two options:
     a) Find out the station number n by typing the **STN** command and enter **MACSTA<n>**, where **n** is the station number, to initiate MACRO ASCII communication with the Station.
     b) Reset the station number of all the stations by entering **MACSTA0** and then **STN=0**. Exit MACRO ASCII communications by typing **<Control-T> (^T)**. Then enter **MACSTA255** to access the first Station. Now assign it a Station number by entering **STN=n** where **n** is the Station number. Enter **(^T)** to exit MACRO ASCII Communications. Enter **MACSTA255** again to access the next station and repeat this process until a MACRO I/O error is received stating that there are no further unassigned stations.
2. Enter **MACSTA<n>** where **n** is the Station number. Enter **I996=$F4004**. (Binds to Ring Controller 0 and Node2)
3. Enter **^T**. (Control-T terminates MACRO ASCII Communications.)
4. Enter **MSCLRF2**. (Clears any faults at Node 2.)
5. Enter **I6841= $0FC004**. (Enable Node 2.)

Issue the **SAVE** and **MSSAVE{node}** commands to save the parameters in memory

MACRO ASCII Communications

MACRO ASCII Communication Mode allows direct access to the MACRO Device. This mode of communication allows the Master controller to set up all MACRO devices in the ring one at a time using the Ring Order Method. One other benefit to this method of communications is that it allows direct communication to the MACRO device without having to issue MS commands as in the traditional PEWIN Terminal window.

At a minimum, the following I-variables must be set to the Turbo PMAC to enable MACRO ASCII mode communications.

```
I6840=$4030          ; to enable MACRO IC0 as sync-master and node 14 for auxiliary communications
I6841=$0FCxxx        ; to enable node 15 and 14.  If activating nodes 0,1,4,5 set I6841=$0FC033
I79=32               ; Timeout value for Node 14 Auxiliary communications
```

If using more than one MACRO IC, set up I6890, I6891, I6940, I6941, I6990, and I6991 appropriately. Once the communication variables are modified, save them to the memory of the controller with the **SAVE** command and then reset the controller with either a **$$$** command or power cycle the controller.

Note:

The PMAC controller can communicate to the MACRO Device in MACRO ASCII communication mode after the unit has been restarted with the changes saved to its memory.

How to Enable and Disable MACRO ASCII Communication Mode

To start the MACRO ASCII Mode, issue the **MACSTAn** (n stands for the assigned station number for the device) command to the device in the ring.

Note:

For MACRO ASCII communication via PEWIN 32 Pro, close all other windows of the PEWIN other than the terminal window.

HyperTerminal also can be used for MACRO ASCII communication to the Geo MACRO drive. PEWIN32 Pro must be totally closed.

In many cases, there will be only one device and a number may not be assigned to the device. In that case, use the **MACSTA255** or **MACSTA0** commands. The actual number that is assigned to the device resides in MI11 of the MACRO Device and the default value is 0. If there are multiple MACRO devices in the ring and communication is in MACRO ASCII mode, set up the systems with the Ring Order Method and assign station numbers to each device. If the assigned station number is not known, check MI11.

Once in MACRO ASCII Mode, communicate to the MACRO device is done directly. To change/monitor an MI-variable, write directly to the Variable in the terminal window.

```
MI996=$0F803F                ;To activate Nodes 0,1,2,3,4,5 at the MACRO Device
```

To exit or disable MACRO ASCII Communication mode, issue the **<CTRL>T** command.

Note:

The **MACSTA255** command will look for the first MACRO device that does not have a station number assigned to it (MI11=0). As soon as MI11 is changed to a value greater than zero, then it will look immediately for the next device with MI11 set to zero.

MACRO ASCII Communication global commands

1. **VID** Vendor ID (Delta Tau = 1, Range=1- 65535)
2. **CID** Vendor Card ID, Part Number, (Range=1- 4,294,967,295) 32 bit unsigned.

Delta Tau: Turbo PMAC2 VME = 602413 (MACRO Master)

Delta Tau: Turbo PMAC2 Ultralite	= 603182	(MACRO Master)
Delta Tau: UMAC Turbo	= 603382	(MACRO Master)
Delta Tau: UMAC MACRO 8	= 602804	(MACRO Slave)
Delta Tau: UMAC MACRO 16	= 603719	(MACRO Slave)
Delta Tau: Geo MACRO Drive	= 603542	(MACRO Slave)
Delta Tau: ACC-65M	= 603740	(MACRO Slave)
Delta Tau: ACC-68M	= 603747	(MACRO Slave)

3. **SID** Serial ID (Range = 64 bit unsigned, 0=Serial ID not available)
4. **`$$$**`** - Station to reset to default parameter with no station number and ready for Ring location identification.

Note

Do not use **`$$$***`**.

5. **SAVE** – Save station number and initialization parameters.
6. **`$$$`** – Reset Station to saved station number and initialization parameters.
7. **STN=n <n=0-254>** – Assigns the MACRO station number. Normally, this would be its order in the Ring. A **STN=0** resets the station number and is reserved for the Ring Controller Master.
8. Commands with **STN=0** is a broadcast to all stations in the ring.
9. Commands with **STN=255** is a request for communication with the first station in the ring with its STN=0.
10. Commands with **STN=1-254** is a request for communication with the station in the ring with STN=1-254.
11. **STN** – The addressed MACRO Station responds with its station number (n).

SETTING UP PRIMARY FEEDBACK

Device Selection Control

Geo Drives with the appropriate options can handle Quadrature Encoder Input (Shift / No Shift), Resolver Feedback, Sinusoidal Encoder Input, SSI Absolute Encoders, ENDAT Interface (future release) and Hiperface Interface (future release).

The main encoder input channels for the Geo PMAC Drive supports a variety of encoder feedback types. 5V supply to power the encoder is provided from each encoder connector.

Encoder #1	Encoder #2	Value	Decode Function
MS{node},MI101	MS{node},MI102	0	Quadrature Encoder, Normal Shifting (1/T) (5-bits)
MS{node},MI101	MS{node},MI102	1	Quadrature Encoder, No shifting
MS{node},MI101	MS{node},MI102	2	SSI encoder, CW
MS{node},MI101	MS{node},MI102	3	SSI encoder, CCW
MS{node},MI101	MS{node},MI102	4	Resolver CW
MS{node},MI101	MS{node},MI102	5	Resolver CCW
MS{node},MI101	MS{node},MI102	6	Sinusoidal Encoder x4096
MS{node},MI101	MS{node},MI102	12	Write the arctangent value of the Sin and Cos to the MACRO IO node (Resolver CCW +8)
MS{node},MI101	MS{node},MI102	13	Write the arctangent value of the Sin and Cos to the MACRO IO node (Resolver CW +8)
MS{node},MI101	MS{node},MI102	14	Write the Sin and Cos values to the MACRO IO node (Sin enc.) For troubleshooting

Setting up Digital Quadrature Encoders

Digital quadrature encoders are the most common position sensors used with Geo Drives. Interface circuitry for these encoders comes standard on board-level Turbo PMAC controllers, UMAC axis-interface boards, Geo drives, and QMAC control boxes.

User needs to set up his MS<node>, MI101 equal to 0 for channel #1 of his Geo MACRO drive for normal quadrature encoder with 5-bit shifting (1/T). If the user doesn't want to use the 1/T shifting then he needs to set MS<node>, MI101 equal to 1.

For the second channel use MS<node>, MI102 and the same with channel #1.

So as to change the direction of the encoder feedback the user can either swap the cable leads or an easier way would be to set MS<node>, MI910 equal to 3, clockwise, or equal to 7 for counterclockwise. MI910 can be set to more values for different options, please look at the Software Reference Appendix.

Setting up SSI Encoders

The Geo Drive will take the data from the SSI encoder and process it as a binary parallel word (12 or 24 bits). This data can then be processed in the PMAC encoder conversion table for position and velocity feedback. With proper setup, the information can also be used to commutate brushless and AC induction motors.

Caution:

Geo Drive was designed to work with either Gray Code or Binary Style SSI Encoders. The Geo Drive takes the gray/binary code information and converts it into a parallel binary word for absolute and ongoing position data

User needs to set up his MS<node>, MI101 equal to 2 (CW) or 3 (CCW) and then set 2 I-variables per channel.

The user needs to set the control word **MS<node>,MI930** (channel#1) and **MS<node>,MI931** (channel#2) depending on the SSI encoder that the system uses, the control word specifies the mode that the data are coming back to the PMAC (binary or gray code) and the length of the word.

- A 12-bit numeric binary encoder would mean the control word (MI930/MI931) need to be set equal to $2, if the encoder is outputting gray code then the control word needs to be set equal to $3.
- A 16-bit numeric binary encoder would mean the control word (MI930/MI931) need to be set equal to $6, if the encoder is outputting gray code then the control word needs to be set equal to $7.
- A 20-bit numeric binary encoder would mean the control word (MI930/MI931) need to be set equal to $A, if the encoder is outputting gray code then the control word needs to be set equal to $B.
- A 24-bit numeric binary encoder would mean the control word (MI930/MI931) need to be set equal to $E, if the encoder is outputting gray code then the control word needs to be set equal to $F.

And the second I-variable the user needs to set is the clock output (frequency) to the SSI- encoder interface (**MS<node>, MI933**). A value of 0 sets the Clock output @ 153.6 KHz. If higher clock frequency required then MI933 can be set equal to 1 which sets the clock output @ 307.2 KHz, while a value of 2 sets the clock output @ 614.4 KHz to the SSI-encoder interface. And the highest value the clock can be set would be when MI933=3 setting the clock output @1.23MHz. MI933 is setting the clock output for both channels #1 and #2, so user can not have different excitation frequencies for his two SSI-interface encoders.

SSI encoders (especially multi-turn) generally provide absolute position information that eliminates the need for a homing-search move to establish a position reference.

Setting up Sinusoidal Encoders

The Geo Drive with the Interpolator option accepts inputs from two sinusoidal or quasi-sinusoidal encoders and provide encoder position data to the motion processor. This interpolator creates 4,096 steps per sine-wave cycle.

The Geo MACRO drive so as to read the sinusoidal encoders needs the device control variable MS<node>, MI101 (for the first channel #1) or MS<node>, MI102 (for the second channel #2) equal to **6**. Also the user can reverse the direction of the sinusoidal encoder by setting the MS<node>, MI910 equal to 3 (ClockWise) or 7 (CounterClockWise)

If the direction decode variable is changed, the user must save the setting, **MSSAVE{node}** and reset the card **MS$$$${node}** before the fractional direction sense matches.

Note

Home Capture with high resolution feedback requires bit 11 of Ixx24 on the Turbo PMAC to be set to one (value $800 or 2,048). Bit 12 of Ixx24 enables the Sub-count Capture while the Geo MACRO's: MS<node>, MI7mn9 is set to one.

Principle of PMAC Interpolation Operation

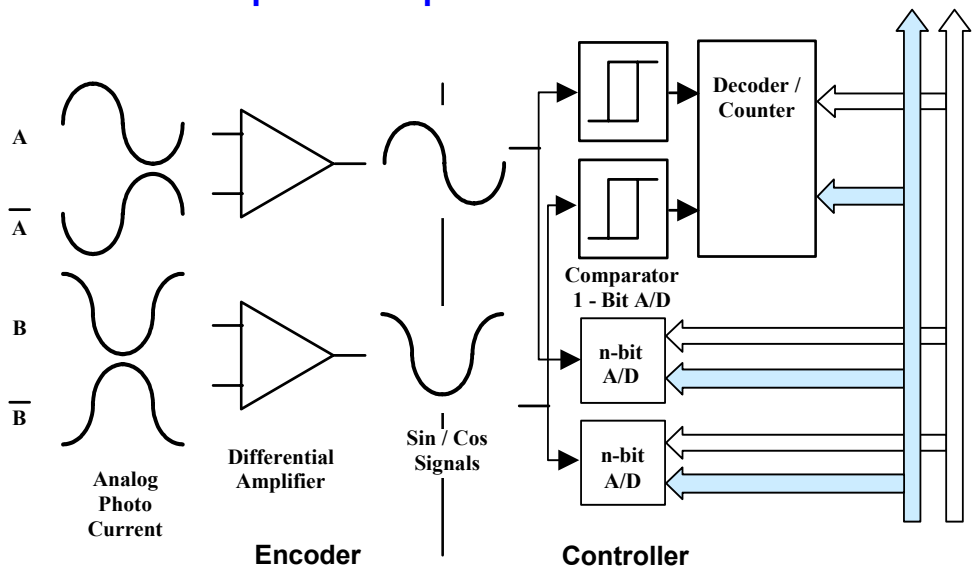

The sine and cosine signals from the encoder are processed in two ways in the Geo Drive board (see above diagram). First, they are sent through comparators that square up the signals into digital quadrature and sent into the quadrature decoding and counting circuit of the Servo IC on the Geo Drive. The units of the hardware counter, which are called hardware counts, are thus ¼ of a line. For most users, this fact is an intermediate value, an internal detail that does not concern them. However, this is important in two cases. First, if the sinusoidal encoder is used for PMAC-based brushless-motor commutation, the hardware counter, not the fully interpolated position value, will be used for the commutation position feedback. Therefore, the units of Ixx71 will be hardware counts.

Second, if the hardware position-compare circuits in the Servo IC are used, the units of the compare register are hardware counts. (The same is true of the hardware position-capture circuits, but often these scaling issues are handled automatically through the move-until-trigger constructs).

The second, parallel, processing of the sine and cosine signals is through analog-to-digital converters, which produce numbers proportional to the input voltages. These numbers are used to calculate mathematically an arctangent value that represents the location within a single line. This is calculated to

1/4096 of a line, so there are 4096 unique states per line, or 1024 states per hardware count.

For historical reasons, PMAC expects the position it reads for its servo feedback software to have units of 1/32 of a count. That is, it considers the least significant bit (LSB) of whatever it reads for position feedback to have a magnitude of 1/32 of a count for the purposes of its software scaling calculations. We call the resulting software units software counts and any software parameter that uses counts from the servo feedback (e.g., jog speed in counts/msec, axis scale factor in counts/engineering-unit) is using these software counts. In most cases, such as digital quadrature feedback, these software counts are equivalent to hardware counts.

However, with the added resolution produced by the Geo Drive interpolator option, software counts and hardware counts are no longer the same. The LSB produced by the interpolator (through the encoder conversion table processing) is 1/1024 of a hardware count, but PMAC software considers it 1/32 of a software count. Therefore, with the Geo drive, a software count is 1/32 the size of a hardware count.

The following equations express the relationships between the different units when using the Geo Drive:

1 line = 4 hardware counts = 128 software counts = 4096 states (LSBs)
¼-line = 1 hardware count = 32 software counts = 1024 states (LSBs)
1/128-line = 1/32-hardware count = 1 software count = 32 states (LSBs)
1/4096-line = 1/1024-hardware count = 1/32-software count = 1 state (LSB)

Note that these are all just naming conventions. Even the position data that is fractional in terms of software counts is real. The servo loop can see it and react to it, and the trajectory generator can command to it.

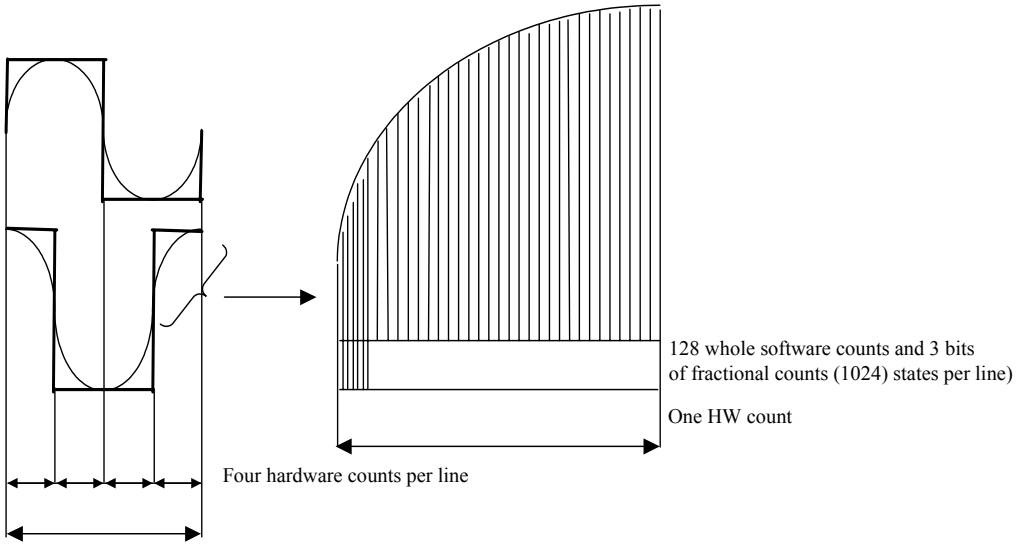

The Interpolator can accept a voltage-source (1Vp-p) signal from the encoder. The maximum sine-cycle frequency input is approximately 8 MHz (1,400,000 SIN cycles/sec), which gives a maximum speed of about 5.734 billion steps per second.

When used with a 1000 line sinusoidal rotary encoder, there will be 4,096,000 discrete states per revolution (128,000 software counts). The maximum calculated electrical speed of this encoder would be 1,400 RPS or 84,000 RPM, which exceeds the maximum physical speed of most encoders.

Example 1:
A 4-pole rotary brushless motor has a sinusoidal encoder with 2000 lines. It directly drives a screw with a 5-mm pitch. The encoder is used for both commutation and servo feedback. The user first needs to set MS<node>, MI101=6 and/or MS<node>, MI102=6 for sinusoidal encoder. If needed the direction decode can also be reversed with MS<node>, MI910 equal to 3 (CW) or 7 (CCW)

The commutation uses the hardware counter. There are 8000 hardware counts per revolution, and two commutation cycles per revolution of the 4-pole motor. Therefore, Ixx70 will be set to 2, and Ixx71 will be set to 8000. Ixx83 will contain the address of the hardware counter's phase capture register.

For the servo, the interpolated results of the conversion table are used. There are 128 software counts per line, or 256,000 software counts per revolution. With each revolution corresponding to 5 mm on the screw, there are 51,200 software counts per millimeter. The measurement resolution, at 4096 states per line, is 1/8,192,000 of a revolution, or 1/1,638,400 of a millimeter (~0.6 nanometers/state).

Example 2:
A linear brushless motor has a commutation cycle of 60.96 mm (2.4 inches). It has a linear scale with a 20-micron line pitch. The scale is used for both commutation and servo feedback. The user first needs to set MS<node>,MI101=6 and/or MS<node>,MI102=6 for sinusoidal encoder. If needed the direction decode can also be reversed with MS<node>,MI910 equal to 3 (CW) or 7 (CCW)

The commutation uses the hardware counter. There are 200 hardware counts per millimeter (5 microns per count), so 12,192 hardware counts per commutation cycle. Ixx70 should be set to 1, and Ixx71 should be set to 12,192.

The servo uses the interpolated results of the conversion table. With 128 software counts per line, and 50 lines per millimeter, there are 6400 software counts per millimeter (or 162,560 software counts per inch). The measurement resolution, at 4096 states per line, is 204,800 states per mm (~5 nanometers/state).

Setting up Endat

The Geo Drive can be ordered to accept Heidenhain Corporations proprietary Endat 2.1 absolute feedback.

Requires firmware version 1.009 or higher on the Geo MACRO.

New variables:

1. MI111 and MI112 are the two new I variables that will be used on the Geo MACRO to setup the Endat power on position and phasing. These variables read the absolute position into MI920 for the respective node. The MI920 returns a 48 bit value. The MI111 and MI112 are set as follows:

   Bits 0-4: First Shift Left to move the MSB of the data being read to the 47th bit.

   Bits 8-12: Second Shift Right to scale the data properly with the ongoing position.

   Bit 13: 0 for 1 error bit, 1 for 2 error bits.

   Bit 14: Complement the data if the direction sense is reversed. This is set to 1 or 0 based on the direction sense of the ongoing position encoder

   Bit 15: Set to 0 for unsigned data. Set to 1 for Signed data.

   Examples:

   For a 25-bit Endat with 512 lines on the sinusoidal encoder:

   Unsigned setup: MI111=$5417 (23 bits Shift Left, 20 bits Shift Right, complemented, unsigned, 1 error bit).

   Signed setup: MI111=$D417 (23 bits Shift Left, 20 bits Shift Right, complemented, signed, 1 error bit).
2. Ix10 and Ix95 will be setup for MACRO absolute position parallel read. E.g. for motor 1 on node 0: I110=$100 and I195=$740000.
3. Ix81 and Ix91 will be setup for MACRO absolute parallel power on phasing. E.g. for motor 1 on node 0: I181=$100 and I195=$740000.
4. To set the value for Ix75:

   Set Ix69=0. Next do a #xO0, then set Ix79=2000 (Safe current value). Do a #x$, set Ix75=-Mx71. Now set Mx71=0 and Ix79=original offset value. Set #xk and Ix69 back to the original value.

Setting up Resolvers

The Geo MACRO Drive has up to two channels of resolver inputs. The inputs may be used as feedback or master reference signals for the PMAC servo loops. The basic configuration of the drive contains one 12-bit resolution (x4096) tracking resolver-to-digital (R-to-D) converter, with an optional second resolver when a dual axis driver is ordered. The Geo drive creates the AC excitation signal (ResOut) for up to two resolvers, accepts the modulated sine and cosine signals back from these resolvers, demodulates the signals and derives the position of the resolver from the resulting information, in an absolute sense if necessary.

The Geo MACRO drive so as to read the Resolver feedback needs the device control variable MS<node>, MI101 (for the first channel #1) or MS<node>, MI102 (for the second channel #2) equal to **4** (ClockWise) or equal to **5** (CounterClockWise).

Then the user has to set three (3) MI-variables so as the Resolvers to function correctly.

The ResOut signal, Resolver excitation frequency, from the Geo MACRO Drive is derived from the

Phase Clock frequency of the PMAC set by I7m00 and I7m01. The user has the ability to select the excitation frequency to be equal with the Phase Clock frequency (default) by setting **MS<node>,MI932** equal to 0. Or use lower frequencies by increasing the value of MI932.

- Excitation frequency could be set equal to a half (1/2) the Phase Clock Frequency if MI932=1
- Excitation frequency could be set equal to a quarter (1/4) the Phase Clock Frequency if MI932=2
- Excitation frequency could be set equal to a sixth (1/6) the Phase Clock Frequency if MI932=3, this would be and the lowest available excitation frequency.

Also the user needs to set the Excitation output gain for the systems resolvers, by setting **MS<node>,MI940**. Default MI940 is set to 0, which means a 2.5V gain peak-to-peak. If a gain of 5V peak-to-peak is needed then the user needs to set MI940=1. With MI940=2 the output gain is 7.5V, and the maximum gain would be 10V peak-to-peak when MI940=3.
Finally the resolver excitation phase time offset, **MS<node>, MI941**, needs to be set. The optimum setting f MI941 depends on the L/R time constant of the resolver circuit. So MI941 should be set interactively to maximize the magnitudes of the feedback ADC values. Turbo PMAC setup handles these calculations, the section below shows how someone can set it up manually.

Setting up the Phase Shift (MI941) Manually

Set up the MS<node>, MI101 or MS<node>MI102 equal to 12 ($C) or 13 ($D) depending if it was $4 or $5 respectively (basically add +8 to the value of MI101 or MI102). This decode value puts the ADC values of the Sine and Cosine into the ADC registers of the corresponding IO node register.

For example, if using a resolver for motor #1 on Node 0:

```
MS0,MI101
5
MS0,MI101=13
```

This would enable the ADCs of the first resolver to come back on X:$78421 and X:$78422. (Check Appendix D, ADC Registers Table.)

Now, setup two M-variables to point to these registers:

M905->X:$78421,8,16,s and M906->X:$78422,8,16,s were used in the example.

The values of these registers will toggle between a + and - value, sign does not matter; only the absolute value is important. As the motor shaft is rotated, observe these values, if either of them is saturated to +/- 32767, the resolver gain is too high (MI940). Decrease its value.

Next, position the motor shaft so that one of the ADC values is close to the maximum value that can be monitored. The other register will be close to 0.

MI941 default value is 0, start increasing its (MI941) value by increments of 25. The value of the large ADC should slowly start increasing. If it decreases, start with MI941=255 and slowly start decreasing it in increments of 25. The ADC value should increase up to a maximum point and then start to decrease again. This point to the MI941 value that should be set to get the maximum ADC value possible.

Finally, if the maximum value of the large ADC is less than 16000, increase the gain of the resolver (MI940).

Setting up the Resolver for Power-On Absolute Position

It is possible to get absolute position directly to the Geo drive. Most commonly, this is just the absolute position within one motor revolution or even one commutation cycle to establish the commutation phase reference position without any motion. This section summarizes the variable settings for this technique; refer to the Appendix B or to the Software Reference Manual for details.

WARNING:

An unreliable phasing reference method can lead to a runaway condition. Test the phasing reference method carefully to make sure it works properly under all conceivable conditions. Make sure the Ixx11 fatal following error limit is active and as tight as possible so the motor will be killed quickly in the event of a serious phasing search error.

Absolute Phase Power-On Position Address and Format: Ixx81, Ixx91, Ixx75

To read an R/D converter for absolute phase position, Ixx81 is set equal to the MACRO node's position feedback register, and Ixx91 is set to $180000.

Motor phase offset variable Ixx75 contains the difference between the absolute resolver position and the resulting phase angle position (if any).

Absolute Servo Power-On Position Address and Format: Ixx10, Ixx95

Turbo PMAC will obtain the absolute servo power-on position through the MACRO ring. To read an R/D converter for absolute power on position, Ixx10 specifies the address of the register containing the position data from the Geo MACRO drive, which points to the ECT (See Appendix under Ixx95). And Ixx95 is set to $5B0000, Parallel X-register, unsigned value, 19 bits, Motor xx will do parallel data read of the Turbo PMAC memory at the address specified by Ixx10.

Motor offset variable Ixx26 contains the difference between the absolute resolver position and the resulting motor position (if any).

Scaling the Feedback Units

The Geo Drive R/D converter is a 12-bit converter. It reports 4096 separate states per electrical cycle of the resolver (per mechanical revolution for a typical 2-pole resolver, per half revolution for a 4-pole resolver.

SETTING UP SECONDARY ENCODERS

Geo Drives have also secondary encoder inputs that can be used for dual feedback. The input signals need to be digital quadrature encoders. Single Axis drives have one secondary encoder and dual axis drives have two secondary encoders.

Secondary encoders so as to be enabled require a motor node. So the user needs to "burn" a motor channel/node so he can read the encoder feedback. The motors need to be activated Ixx00 equal to one, and activate the MACRO motor nodes I6841/I6891/I6941/I6991, and set MS<node>, I996 enabled.

Note:

The Secondary Encoders of a Geo MACRO drive can not be assigned to nodes before the primary nodes of that drive. For example if you have for your primary encoders node 4 (channel#1) and node 5 (channel#2), then the secondary encoders can be in any free motor node after that 8/9/12/13 (MACRO IC0) , 16/17/20/21/24/25/28/29 (MACRO IC1), 32/33/36/3/40/41/44/45 (MACRO IC2), 48/49/52/53/56/57/60/61 (MACRO IC3), and cannot be assigned as node 1 or 2 or any occupied by another motor node.

For the Secondary encoders at the Geo MACRO drives the MI variables are a little different than the primary encoder channels. By setting MI910 equal to 0 (default) the encoder decode is x4 (cts.) or it can be set equal to 1 for an encoder decode x1 (cts.)

The user can only reverse the direction by setting the MS<node>,MI911 equal to 0 for Clockwise(CW) or equal to 1 for CounterClockWise (CCW). Make sure when you change the direction decode that the output sense direction also follows, else runaway can occur.

For capturing the user needs first to select which input to use, Home Flag or Index channel. MS<node>, MI915 . If the user wants to capture on the Index channel (only) then MI915 has to be set equal to $C0. If the user wants to capture on the Home Flag then MI915 needs to be set equal to $6000. For capturing to both inputs, Home Flag and Index Input, MI915 needs to be set equal to $40C0. Depending on the input that the user chose, MI912 or MI913 need to be set respectively. For Capturing at the Index input (C channel) MS<node>,MI912 can be set equal to 0 for capturing at the rising edge, or equal to 1 for capturing at the falling edge (edge trigger not level trigger). Default the value is equal to 0. The trigger would be armed as soon as the position capture register is read.

If the user wants to capture at the Home Flag (HMFL) then MS<node>, MI913 has to be set equal to 0 for capturing on the rising edge, or equal to 1 for capturing on the falling edge (edge trigger not level trigger).

Using the secondary encoder requires enabling an additional motor (not I/O) node, in both the Geo MACRO drive and the Turbo PMAC to transfer the data back to the Turbo PMAC.

If the user wants to use only one primary encoder and one secondary encoder without "burning" extra motor nodes, it is possible to disable the second primary encoder of the drive (check "MS<node>,MI100" variable), and enable the appropriate motor nodes. For example, if the user wants to setup a single axis Geo MACRO (Station=1) with one quadrature primary encoder and one secondary encoder, he would have to enable two motor nodes. (no I/O nodes are being set for this example)

```
MS0,MI996=$FC003    ; Enable motor nodes 0 and 1
MS0,MI100=1         ; Disable second primary channel
MS0,MI101=0  or 1   ; Set up the primary encoder channel for quadrature feedback
MSSAVE0             ; All changes to take effect
MS$$$0 or power cycle
I100=1              ; Activates axis #1 position
I200=1              ; Activates axis #2 position
```

SETTING UP THE TURBO PMAC CONVERSION TABLE

The position feedback from the Geo MACRO drive must be processed in the Turbo PMAC's encoder conversion table (ECT) before it can be used for servo purposes, such as position or velocity loop feedback. The position feedback, whether primary or secondary, appears in the 24-bit Register 0 for the servo node used. This is mapped as a Y-register in the Turbo PMAC, and the servo tasks can only access X-registers for their source data.

So the primary purpose of the Turbo PMAC ECT entries for processing feedback from the Geo MACRO drive is to move the data from the Y-registers in the MACRO ICs to X-registers in RAM, where they can quickly be accessed by servo tasks, without requiring other processing.

This task is accomplished by conversion method "$2": parallel read of a Y-register, no filtering. Typically, the data from the Geo MACRO drive has already been shifted the standard 5 bits, so the standard shifting in the ECT can be disabled by setting bit 19 of the first setup word (first I-variable of the entry) to 1. This makes the method word $280000 + {Node Register 0 address}.

The second and last line (I-variable) of the entry should be set to $018000. The "018" (hexadecimal) specifies that all 24 bits of the source register be used; the "000" specifies that the bits used start at bit 0.

The following table shows an ECT in which the first eight entries are conversions of the first eight MACRO servo nodes. Note have the combination of the bit 19 "shift disable bit and the "7" in the second digit of the register address (e.g. $078420 for Node 0 Register 0) make the second hex digit of setup word of each entry equal to "F".

I-Var.	Setting	Meaning	Turbo PMAC Address
I8000	$2F8420	MACRO Node 0 Reg. 0 Read	$003501
I8001	$018000	24 bits, bit 0 LSB	$003502
I8002	$2F8424	MACRO Node 1 Reg. 0 Read	$003503
I8003	$018000	24 bits, bit 0 LSB	$003504
I8004	$2F8428	MACRO Node 4 Reg. 0 Read	$003505
I8005	$018000	24 bits, bit 0 LSB	$003506
I8006	$2F842C	MACRO Node 5 Reg. 0 Read	$003507
I8007	$018000	24 bits, bit 0 LSB	$003508
I8008	$2F8430	MACRO Node 8 Reg. 0 Read	$003509
I8009	$018000	24 bits, bit 0 LSB	$00350A
I8010	$2F8434	MACRO Node 9 Reg. 0 Read	$00350B
I8011	$018000	24 bits, bit 0 LSB	$00350C
I8012	$2F8438	MACRO Node 12 Reg. 0 Read	$00350D
I8013	$018000	24 bits, bit 0 LSB	$00350E
I8014	$2F843C	MACRO Node 13 Reg. 0 Read	$00350F
I8015	$018000	24 bits, bit 0 LSB	$003510

The I-variables that use the results of the conversions (e.g. Ixx03 and Ixx04 for position and velocity-loop feedback) will be set to the address of the last line of the entry. For example, if Motor 1 used the processed data for Node 0 Register 0 from the above table for position-loop feedback, I103 would be set to $3502. It is also possible to set these variables by specifying that you want to use the address of the last I-variable in the entry. The command **`I103=@I8001`** performs the same action as **`I103=$3502`**.

SETTING UP TURBO MOTOR OPERATION

Turbo PMAC Basic Setup for Brushless Servo or Induction Motor

1) Basic I-variable settings:
   - Ixx00 = 1
   - Ixx01=3 ;setting for commutation across MACRO
   - Ixx02 = node address – base +0 – output address

I102 $078420 MACRO IC 0 Node 0 Reg. 0	I1702 $07A420 MACRO IC 2 Node 0 Reg. 0
I202 $078424 MACRO IC 0 Node 1 Reg. 0	I1802 $07A424 MACRO IC 2 Node 1 Reg. 0
I302 $078428 MACRO IC 0 Node 4 Reg. 0	I1902 $07A428 MACRO IC 2 Node 4 Reg. 0
I402 $07842C MACRO IC 0 Node 5 Reg. 0	I2002 $07A42C MACRO IC 2 Node 5 Reg. 0
I502 $078430 MACRO IC 0 Node 8 Reg. 0	I2102 $07A430 MACRO IC 2 Node 8 Reg. 0
I602 $078434 MACRO IC 0 Node 9 Reg. 0	I2202 $07A434 MACRO IC 2 Node 9 Reg. 0
I702 $078438 MACRO IC 0 Node 12 Reg. 0	I2302 $07A438 MACRO IC 2 Node 12 Reg. 0
I802 $07843C MACRO IC 0 Node 13 Reg. 0	I2402 $07A43C MACRO IC 2 Node 13 Reg. 0
I902 $079420 MACRO IC 1 Node 0 Reg. 0	I2502 $07B420 MACRO IC 3 Node 0 Reg. 0
I1002 $079424 MACRO IC 1 Node 1 Reg. 0	I2602 $07B424 MACRO IC 3 Node 1 Reg. 0
I1102 $079428 MACRO IC 1 Node 4 Reg. 0	I2702 $07B428 MACRO IC 3 Node 4 Reg. 0
I1202 $07942C MACRO IC 1 Node 5 Reg. 0	I2802 $07B42C MACRO IC 3 Node 5 Reg. 0
I1302 $079430 MACRO IC 1 Node 8 Reg. 0	I2902 $07B430 MACRO IC 3 Node 8 Reg. 0
I1402 $079434 MACRO IC 1 Node 9 Reg. 0	I3002 $07B434 MACRO IC 3 Node 9 Reg. 0
I1502 $079438 MACRO IC 1 Node 12 Reg. 0	I3102 $07B438 MACRO IC 3 Node 12 Reg. 0
I1602 $07943C MACRO IC 1 Node 13 Reg. 0	I3202 $07B43C MACRO IC 3 Node 13 Reg. 0

   - Ixx03 = ECT address for position encoder - $35xy
   - Ixx04 = ECT address for velocity encoder - $35xy
   - Ixx24 = flag mode (limit switches)
   - Ixx25 = node space for flags - $34xy

I125 $003440 MACRO Flag Register Set 0	I1725 $003460 MACRO Flag Register Set 32
I225 $003441 MACRO Flag Register Set 1	I1825 $003461 MACRO Flag Register Set 33
I325 $003444 MACRO Flag Register Set 4	I1925 $003464 MACRO Flag Register Set 36
I425 $003445 MACRO Flag Register Set 5	I2025 $003465 MACRO Flag Register Set 37
I525 $003448 MACRO Flag Register Set 8	I2125 $003468 MACRO Flag Register Set 40
I625 $003449 MACRO Flag Register Set 9	I2225 $003469 MACRO Flag Register Set 41
I725 $00344C MACRO Flag Register Set 12	I2325 $00346C MACRO Flag Register Set 44
I825 $00344D MACRO Flag Register Set 13	I2425 $00346D MACRO Flag Register Set 45
I925 $003450 MACRO Flag Register Set 16	I2525 $003470 MACRO Flag Register Set 48
I1025 $003451 MACRO Flag Register Set 17	I2625 $003471 MACRO Flag Register Set 49
I1125 $003454 MACRO Flag Register Set 20	I2725 $003474 MACRO Flag Register Set 52
I1225 $003455 MACRO Flag Register Set 21	I2825 $003475 MACRO Flag Register Set 53
I1325 $003458 MACRO Flag Register Set 24	I2925 $003478 MACRO Flag Register Set 56
I1425 $003459 MACRO Flag Register Set 25	I3025 $003479 MACRO Flag Register Set 57
I1525 $00345C MACRO Flag Register Set 28	I3125 $00347C MACRO Flag Register Set 60
I1625 $00345D MACRO Flag Register Set 29	I3225 $00347D MACRO Flag Register Set 61

- Ixx66 = 16384 ; Geo MACRO PWM scale factor
- Ixx82 = node address = base node address + 2 (ADC B) – commutation current feedback

I182 $078422 MACRO IC 0 Node 0 Reg. 2	I1782 $07A422 MACRO IC 2 Node 0 Reg. 2
I282 $078426 MACRO IC 0 Node 1 Reg. 2	I1882 $07A426 MACRO IC 2 Node 1 Reg. 2
I382 $07842A MACRO IC 0 Node 4 Reg. 2	I1982 $07A42A MACRO IC 2 Node 4 Reg. 2
I482 $07842E MACRO IC 0 Node 5 Reg. 2	I2082 $07A42E MACRO IC 2 Node 5 Reg. 2
I582 $078432 MACRO IC 0 Node 8 Reg. 2	I2182 $07A432 MACRO IC 2 Node 8 Reg. 2
I682 $078436 MACRO IC 0 Node 9 Reg. 2	I2282 $07A436 MACRO IC 2 Node 9 Reg. 2
I782 $07843A MACRO IC 0 Node 12 Reg. 2	I2382 $07A43A MACRO IC 2 Node 12 Reg. 2
I882 $07843E MACRO IC 0 Node 13 Reg. 2	I2482 $07A43E MACRO IC 2 Node 13 Reg. 2
I982 $079422 MACRO IC 1 Node 0 Reg. 2	I2582 $07B422 MACRO IC 3 Node 0 Reg. 2
I1082 $079426 MACRO IC 1 Node 1 Reg. 2	I2682 $07B426 MACRO IC 3 Node 1 Reg. 2
I1182 $07942A MACRO IC 1 Node 4 Reg. 2	I2782 $07B42A MACRO IC 3 Node 4 Reg. 2
I1282 $07942E MACRO IC 1 Node 5 Reg. 2	I2882 $07B42E MACRO IC 3 Node 5 Reg. 2
I1382 $079432 MACRO IC 1 Node 8 Reg. 2	I2982 $07B432 MACRO IC 3 Node 8 Reg. 2
I1482 $079436 MACRO IC 1 Node 9 Reg. 2	I3082 $07B436 MACRO IC 3 Node 9 Reg. 2
I1582 $07943A MACRO IC 1 Node 12 Reg. 2	I3182 $07B43A MACRO IC 3 Node 12 Reg. 2
I1682 $07943E MACRO IC 1 Node 13 Reg. 2	I3282 $07B43E MACRO IC 3 Node 13 Reg. 2

- Ixx83 = node address = base node address +0 – commutation position feedback address

I183 $078420 MACRO IC 0 Node 0 Reg. 0	I1783 $07A420 MACRO IC 2 Node 0 Reg. 0
I283 $078424 MACRO IC 0 Node 1 Reg. 0	I1883 $07A424 MACRO IC 2 Node 1 Reg. 0
I383 $078428 MACRO IC 0 Node 4 Reg. 0	I1983 $07A428 MACRO IC 2 Node 4 Reg. 0
I483 $07842C MACRO IC 0 Node 5 Reg. 0	I2083 $07A42C MACRO IC 2 Node 5 Reg. 0
I583 $078430 MACRO IC 0 Node 8 Reg. 0	I2183 $07A430 MACRO IC 2 Node 8 Reg. 0
I683 $078434 MACRO IC 0 Node 9 Reg. 0	I2283 $07A434 MACRO IC 2 Node 9 Reg. 0
I783 $078438 MACRO IC 0 Node 12 Reg. 0	I2383 $07A438 MACRO IC 2 Node 12 Reg. 0
I883 $07843C MACRO IC 0 Node 13 Reg. 0	I2483 $07A43C MACRO IC 2 Node 13 Reg. 0
I983 $079420 MACRO IC 1 Node 0 Reg. 0	I2583 $07B420 MACRO IC 3 Node 0 Reg. 0
I1083 $079424 MACRO IC 1 Node 1 Reg. 0	I2683 $07B424 MACRO IC 3 Node 1 Reg. 0
I1183 $079428 MACRO IC 1 Node 4 Reg. 0	I2783 $07B428 MACRO IC 3 Node 4 Reg. 0
I1283 $07942C MACRO IC 1 Node 5 Reg. 0	I2883 $07B42C MACRO IC 3 Node 5 Reg. 0
I1383 $079430 MACRO IC 1 Node 8 Reg. 0	I2983 $07B430 MACRO IC 3 Node 8 Reg. 0
I1483 $079434 MACRO IC 1 Node 9 Reg. 0	I3083 $07B434 MACRO IC 3 Node 9 Reg. 0
I1583 $079438 MACRO IC 1 Node 12 Reg. 0	I3183 $07B438 MACRO IC 3 Node 12 Reg. 0
I1683 $07943C MACRO IC 1 Node 13 Reg. 0	I3283 $07B43C MACRO IC 3 Node 13 Reg. 0

- Ixx84 = $fff000 - mask word

Turbo PMAC Basic Setup for DC Brush Motors

Special settings are needed to use the direct-PWM algorithms for DC brush motors. The basic idea is to trick the commutation algorithm into thinking that the commutation angle is always stuck at 0 degrees, so current into the A phase is always quadrature (torque-producing) current. These instructions assume:

- The brush motor's rotor field comes from permanent magnets or a wound field excited by a separate means; the field is not controlled by one of the phases of this channel.

- The two leads of the brush motor's armature are connected to amplifier phases (half-bridges) that are driven by the A and C-phase PWM commands from Turbo PMAC. The amplifier may have an unused B-phase half-bridge, but this does not need to be present.

The following settings are the same as for permanent-magnet brushless servo motors with an absolute phase reference:

- Ixx01=3 (commutation over the MACRO ring)
- Ixx02 should contain the address of the PWM A register for the output channel used or the MACRO Node register 0 (these are the defaults), just as for brushless motors.
- Ixx29 and Ixx79 phase offset parameters should be set to minimize measurement offsets from the A and B-phase current feedback circuits, respectively.
- Ixx61, Ixx62, and Ixx76 current loop gains are set just as for brushless motors.
- Ixx73 = 0, Ixx74 = 0: These default settings ensure that Turbo PMAC will not try to do a phasing search move for the motor. A failed search could keep Turbo PMAC from enabling this motor.
- Ixx77 = 0 to command zero direct (field) current.
- Ixx78 = 0 for zero slip in the commutation calculations.
- Ixx82 should contain the address of ADC B register for the feedback channel used (just as for brushless motors) when the ADC A register is used for the rotor (armature) current feedback. The B register itself should always contain a zero or near-zero value.
- Ixx81 > 0: Any non-zero setting here makes Turbo PMAC do a phasing read instead of a search move for the motor. This is a dummy read, because whatever is read is forced to zero degrees by the settings of Ixx70 and Ixx71, but Turbo PMAC demands that some sort of phase reference be done. (Ixx81=1 is fine.)
- Ixx84 is set just as for brushless motors, specifying which bits the current ADC feedback uses. Usually, this is $FFF000 to specify the high 12 bits.

Special settings for brush motor direct PWM control:

- Ixx70 = 0: This causes all values for the commutation cycle to be multiplied by 0 to defeat the rotation of the commutation vector.
- Ixx72 = 512 (90°e) if voltage and current numerical polarities are opposite, 1536 (270°e) if they are the same. If the amplifier would use 683 (120°e) for a 3-phase motor, use 512 here; if it would use 1365 (240°e) for a 3-phase motor, use 1536 here.
- Ixx96 = 1: This causes Turbo PMAC to periodically clear the integrator for the (non-existent) direct current loop, which could slowly charge up due to noise or numerical errors and eventually interfere with the real quadrature current loop.

Settings that do not matter:

- Ixx71 (commutation cycle size) does not matter because Ixx70 setting of 0 defeats the commutation cycle.
- Ixx75 (Offset in the power-on phase reference) does not matter because commutation cycle has been defeated. Leaving this at the default of 0 is fine.
- Ixx83 (ongoing commutation position feedback address) doesn't matter, since the commutation has been defeated. Leaving this at the default value is fine.

  Ixx91 (power-on phase position format) does not matter, because whatever is read for the power-on phase position is reduced to zero.

2) Set up all M-Var definitions. If using PEWIN32Pro and using a node space setup which equates each motor number with the sequential node number (i.e. motor 1 is node 0, motor 2 is node 1, motor

3 is node 4, motor 4 is node 5, motor 6 is node 8, etc) then you can simply use the Configure M Variables utility in PEWIN32Pro. Tell it to "Download Suggested M Variable Definitions" and click on the "Use Suggested M Variable Definitions" checkbox. This is highly recommended. You may wish to replace M-Var definitions for flag variables with those of the MACRO Flag address definitions.

3) Set MACRO Ivariables:
   - I70-I77 ;all motor node bits go high if used – i.e. $33 for nodes 0,1,4,5
   - I80 = 5 ;ring check period
   - I81=2 ;max ring errors in ring check period
   - I82=2 ;minimum sync packets in ring check period
   - I6840=$30 ;set MACRO IC 0 as synchronizing ring master
   - I6890,I6940,I6990 = $90 ;set MACRO ICs 1,2,3 as ring masters if present
   - I6841=$f8000 + $xyza where xyza are the high bits for each node used
   - I6891=$1f8000 +$xyza if used
   - I6941=$2f8000 +$xyza if used
   - I6991=$3f8000 + $xyza if used
4) Issue a "SAVE" command and a "$$$" command from the terminal window in PEWIN32Pro
5) Set up Geo MACRO address, MI996, either by MACSTA command (recommended) or by USB. This will be equal to bF0000 + xyza where xyza are high bits for each node used and b is the MACRO IC Master number. At the same time set the station number (MI11) on each drive.
6) Issue a "mssav15mssav31mssav47mssav63" command from the terminal window in PEWIN32Pro, or a "SAVE" command from Hyperterminal if using USB communications. Now issue a "ms$$$15ms$$$31ms$$$47ms$$$63" to reset

You should be able to now query the drives from PEWINPro. To confirm that simply issue a "MSn,MI996" command from the terminal window where n is an active node on the drive you want to talk to. You should get the value of that MI variable back in the terminal window.

This assumes that you are using the default 2.2kHz servo and 4.5 kHz PWM rate. Note that the max PWM rate for the Geo MACRO drive is 9 KHz. If you are using another PWM rate you will need to set the I68xx variables which deal with that.

Issue a "SAVE" and then a Reset "$$$". It is recommended to then create a backup file with the PEWIN32PRO.

Now to set up PWM.

1) Check encoder direction – move the motor by hand in the positive direction and make sure that it is counting up. If it is counting in a negative direction then reverse the value of MI910 – change a 7 to a 3 or a 3 to a 7. Now check again and it should have changed direction.
2) Write a PLC like so:

```
Open plc10 clear

Mx02=P2

Mx04 = P4

Mx07=P7

Close
```

Set I5=3 and issue a "SAVE" command from the terminal window. Be sure that there are no other PLCs in memory as we want this to execute at a very high rate.

3) Check ADC connection. Set Ixx00 = 0 for the motor in question. Add Mx05, Mx06, Mx54 to the watch window. Set Mx54=1 for that motor. You should now see the enable LED come on for that

motor on the drive, and Mx54 in the watch window should be 1. If not, be sure that Ix00=0 for that motor and that there are no amp faults on the drive. If there is an amp fault then issue a "MS$$$n" for that drive where n is an active node on that drive. Enable PLC10. Set P2=500 P4=-500 P7=0 from the terminal window. You should now see some rather noisy values in Mx05 and Mx06 of the watch window. If the sign of Mx05 is positive and the sign of Mx06 is negative then the phases match the ADC inputs and Ixx72 will be greater than 1024. For a three phase motor it will be 1365. If not, then Ixx72 will be less than 1024. For a three phase motor it will be 683. Set p2=0p4=0p7=0 and Mx54=0.

4) Now it is time to check the PWM phasing.
   - Set Ixx70= ½ the number of poles of your motor for a rotary motor, or 1 for a linear motor.
   - Set Ixx71 = 32*counts in one revolution of a rotary motor or 32 * counts in one commutation cycle for a linear motor.
   - Set Ixx80 for your phasing method – it should always be disabled on startup or reset with a MACRO drive – the MACRO station will always lose communications with the PMAC on reset or startup and you will need to explicitly reset the MACRO drives after each PMAC reset BEFORE attempting to phase. Usually Ixx80=0.
   - Set Ixx73 for the amount of effort used in finding phase. Around 3000 is probably ok, but this needs to be checked against the maximums for your system and the phasing type. If phasing to Halls or an absolute encoder this number can be very small as there will be no actual motion. If there is a large load, friction or other, this number may need to be fairly high. For very small loads this number may be fairly small (~1500).
   - Set Ixx74 for the phase finding time – probably around 10. For Halls or absolute encoder this can be 1. For large load it may need to be higher to allow time to settle.
   - Issue a "save" command, then a "$$$", then "ms$$$15ms$$$31ms$$$47ms$$$63"
   - Run the Tuning Pro package and tune the current loop for the motor. You should end up with a good step move with minimal dithering, at least 200 Hz natural frequency, and around 2 ms settling time. As a rule of thumb your integral should be about one tenth of your forward path proportional.
   - Check that your motor is free to move. Probably you will want to point an unused motor at the encoder space for this motor and set Ix00 = 1 for that motor so that you can monitor movement during this test. Set Ix00=0 for the motor being tested. Set Ixx29=0 and Ixx79=0 (no phase offsets active). Set Mx54 = 1 (check enable LED on drive) and enable PLC 10. Now set P2, P4, and P7 according to the chart below. Record the position of the motor at each step. You may need to lower or raise the magnitude of the command value for your system. Your motor should move through 1/6 of a commutation cycle for each step, and through an entire cycle for the test.

P2	P4	P7	Electrical Position
0	2000	-2000	0
2000	0	-2000	60
2000	-2000	0	120
0	-2000	2000	180
-2000	0	2000	-120
-2000	2000	0	-60
0	2000	-2000	0

5. The motor is now at electrical 0, so set Mx71=0 in order to force the phase position to zero. If you moved negative through the positions during this test them Ixx72 should be greater than 1024; otherwise it will be less than 1024. If Ixx72 and the direction of motion do not match then you need to switch either the direction of the encoder or the direction of motion of the motor. You can switch the encoder direction by changing MI910. You can change the motor direction by swapping any two motor leads.
6. Now you should be able to run your motor open loop. Issue "Oxx" commands (open loop commands, xx: stands for any value from 00 up to 100 (maximum output)) from the terminal window, gradually stepping up from "O0" (O zero) until you either get motion or fault. If you do not get motion then you have an issue with your phasing. Check the values of all of the I-Variables listed above. Check them again. Try again.
7. Finally tune the position loop using the Tuning Pro package, and you are ready to start programming.

Instructions for Direct-PWM Control of Brush Motors

WARNING:

Make sure before applying any PWM commands to the drive and motor in this fashion that the resulting current levels are within the continuous current rating of both drive and motor.

First, enable the amp, then apply a very small positive command value to Phase A and a very small negative command value to Phase B with the on-line commands:

```
M114=1                                  ; Enable amplifier
M102=I7000/50 M104=-I7000/50 M107=0     ; A pos, B neg, C zero
```

This provides a command at 2% of full voltage into the motor; this should be well within the continuous current rating of both drive and motor. It is a good idea to make the sum of these commands equal to zero so as not to put a net DC voltage on the motor; putting all three commands on one line causes the changes to happen virtually instantaneously.

With power applied to the drive and the amplifier enabled (`M114=1`), current readings should be received in the ADC registers as shown by the M-Variables M105 and M106 in the Watch window.

Since the M-Variables are defined as +/-32,768 for full current range, which should correspond approximately to the instantaneous current limit. Make sure that the value read does not exceed the continuous current limit, usually which is about 1/3 of the instantaneous limit. If well below the continuous current limit, increase the voltage command to 5% to 10% of maximum. For example:

```
M102=I7000/10 M104=-I7000/10 M107=0    ; 10% of maximum
```

PWM/ADC Phase Match

Command values from Turbo PMAC's Phase A PWM outputs should cause a roughly proportionate response of one sign or the other on Turbo PMAC's Phase A ADC input (whatever the phase is named in the motor and drive). The same is true for Phase B.

If no response is received on either phase, re-check the entire setup, including:

- Is the drive properly wired to Turbo PMAC, either directly or through an interface board?
- Is the motor properly connected to the drive?
- Is the drive properly powered, both the power stage, and the input stage?
- Is the interface board properly powered?
- Is the amplifier enabled (M114=1 on Turbo PMAC and indicator ON at the drive)?
- Is the amplifier in fault condition? If so, why?

If only an ADC response is received on one phase, the phase outputs and inputs may not be matched properly. For example, the Phase B ADC may be reading current from the phase commanded by the Phase C PWM output. Confirm this by trying other combinations of commands and checking which ADC responds to which phase command. If there is not a proper match, change the wiring between Turbo PMAC and the drive. Changing the wiring between drive and motor will not help here.

Synchronous Motor Stepper Action

With a synchronous motor, this command should cause the motor to lock into a position, at least weakly, like a stepper motor. This action may be received temporarily on an induction motor, due to temporary eddy currents created in the rotor. However, an induction motor will not keep a holding torque indefinitely at the new location.

Current Loop Polarity Check

Observe the signs of the ADC register values in M105 and M106. These two values should be of approximately the same magnitude, and must be of the opposite sign from each other. (Again, remember

that these readings may appear noisy. Observe the base value underneath the noise.) If M105 is positive and M106 is negative, the sign of the PWM commands matches the sign of the ADC feedback values. In this case, the Turbo PMAC phase angle parameter I172 must be set to a value greater than 1024 (1365 for a 3-phase motor).

If M105 is negative and M106 is positive, the sign of the PWM commands is opposite that of the ADC feedback values. In this case, I172 must be set to a value less than 1024 (683 for a 3-phase motor).

Make sure your I172 value is set properly before attempting to close the digital current loops on Turbo PMAC. Otherwise positive feedback will occur, creating unstable current loops which could damage the amplifier and/or motor.

If M105 and M106 have the same sign, the polarities of the current sense circuitry for the two phases is not properly matched. In this case, something has been mis-wired in the drive or between Turbo PMAC and the drive to give the two phase-current readings opposite polarity. One of the phases will have to be fixed.

Do not attempt to close the digital current loops on Turbo PMAC until the polarities of the current sense circuitry for the two phases have been properly matched. This will involve a hardware change in the current sense wiring, the ADC circuitry, or the connection between them. As an extra protection against error, make sure that Ixx57 and Ixx58 are set properly for I^2T protection that will shut down the axis quickly if there is saturation due to improper feedback polarity.

Troubleshooting

If not getting the current readings that are expected, probe the motor phase currents on the motor cables with a snap-on hall-effect current sensor. If the current is not seen when commanding voltages, check for phase-to-phase continuity and proper resistance when the motor is disconnected.

Testing PWM and Current Feedback Operation

WARNING:

On many motor and drive systems, potentially deadly voltage and current levels are present. Do not attempt to work directly with these high voltage and current levels unless fully trained on all necessary safety procedures. Low-level signals on Turbo PMAC and interface boards can be accessed much more safely.

Usually, in setting up a direct PWM interface there is no need to execute all of the steps listed in these sections (or the Turbo Setup program will do them automatically). However, the first time this type of interface is setup or there are problems, these steps will be of assistance.

For safety reasons, all of these tests should be done with the motor disconnected from any loads. All settings made as a result of these tests are independent of load properties, so will still be valid when the load is connected.

Before testing any of Turbo PMAC's software features for digital current loop and direct PWM interface, it is important to know whether the hardware interface is working properly. PMAC's M-Variables are used to access the input and output registers directly. The examples shown here use the suggested M-Variable definitions for Motor 1.

Purpose

The purpose of these tests is to confirm the basic operation of the hardware circuits on PMAC, in the drive, and in the motor, and to check the proper interrelationships. Specifically:

- Confirm operation of encoder inputs and decode
- Confirm operation of PWM outputs
- Confirm operation of ADC inputs
- Confirm correlation between PWM outputs and ADC inputs

- Determine proper current loop polarity
- Confirm commutation cycle size
- Determine proper commutation polarity

Preparation

First, define the M-Variables for the encoder counter; the three PWM output registers, the amplifier-enable output bit, and the two ADC input registers. Using the MACRO suggested definitions for Motor 1, utilizing MACRO IC 0, Node 0:

```
M101->X:$078420,0,24,S ; Channel 1 Encoder position register (read only)
M102->Y:$078420,8,16,S ; Channel 1 PWM Phase A command value (write only)
M104->Y:$078421,8,16,S ; Channel 1 PWM Phase B command value (write only)
M107->Y:$078422,8,16,S ; Channel 1 PWM Phase C command value (write only)
M105->Y:$078421,8,16,S ; Channel 1 Phase A ADC input value (read only)
M106->Y:$078422,8,16,S ; Channel 1 Phase B ADC input value (read only)
M114->X:$003440,14 ; Channel 1 Amp Enable command bit
```

Note:

The ADC values are declared as 16-bit variables even though typically, 12-bit ADCs are used; this puts the scaling of the variable in the same units as Ixx69, Ixx57, Ixx29, and Ixx79.

It is useful to monitor these values in the Watch window of the Executive program. Therefore, add the variable names to the Watch window which causes the program to repeatedly query Turbo PMAC for the values and display them. Then the hardware can be exercised with on-line commands issued through the Terminal window.

To prepare Turbo PMAC for these tests:

1. Set I100 to 0 to deactivate the motor.
2. Set I101 to 0 to disable commutation. (This allows for manual use of these registers.)
3. Make sure that I7000, I7004, I7016, and I7017 are set up properly to provide the PWM signals desired.
4. If the Amplifier Enable bit is 1, set it to zero with the command `M114=0`.
5. Set Ixx00 and Ixx01 for all other motors to zero.

Position Feedback and Polarity Test

If the PWM command values observed in the Watch window are not zero, set them to zero with the command:

```
M102=0 M104=0 M107=0
```

The motor can be turned (or pushed) freely by hand now. As the motor is turned, monitor the M101 value in the Watch window. Look for the following:

- It should change as the motor is moved.
- It should count up in one direction, and count down in the other direction.
- It should provide the expected number of counts in one revolution or linear distance increment.
- As the motor is returned repeatedly to a reference position, it should report (approximately) the same position value each time.

If these things do not happen, check the encoder/resolver operation, its connection to Turbo PMAC and the Turbo PMAC decode variable I7mn0. Double-check that the sensor is powered. In addition, look at the encoder waveforms with an oscilloscope.

If the direction of motion to be the positive direction is known, check this here. If the direction is incorrect, invert it by changing I7mn0, usually from 7 to 3, or from 3 to 7. If the direction is not known, change it later, but make another change at that time to maintain the proper commutation polarity match;

usually by exchanging two of the motor phase leads at the drive.

Note:

Because I100 has been set to 0, and I103 may not yet have been set properly, any change of position will not be reflected in the motor position window.

Setting Up Hall Commutation Sensors

Many motor manufactures now give the consumer the option of placing both Hall effect sensors and quadrature encoders on the end shaft of brushless motors. This will allow the controller to estimate the rotor magnetic field orientation and adjusts the command among the motor phases properly without rotating the motor at power-up. If this is not done properly, the motor or amplifier could be damaged.

Three-phase digital hall-effect position sensors (or their equivalent) are popular for commutation feedback. They can also be used with Turbo PMAC as low-resolution position/velocity sensors. As commutation position sensors, typically, they are just used by Turbo PMAC for approximate power-up phase position; ongoing phase position is derived from the same high-resolution encoder that is used for servo feedback. (Many controllers and amplifiers use these hall sensors as their only commutation position feedback, starting and ongoing, but that is a lower-performance technique.)

Many optical encoders have hall tracks. These commutation tracks provide signal outputs equivalent to those of magnetic hall commutation sensors, but use optical means to create the signals.

Note:

These digital hall-effect position sensors should not be confused with analog hall-effect current sensors used in many amplifiers to provide current feedback data for the current loop.

Signal Format

Digital hall sensors provide three digital signals that are a function of the position of the motor, each nominally with 50% duty cycle, and nominally one-third cycle apart. (This format is often called 120° spacing. Turbo PMAC has no automatic hardware or software features to work with 60° spacing.) This format provides six distinct states per cycle of the signal. Typically, one cycle of the signal set corresponds to one electrical cycle, or pole pair, of the motor. These sensors, then, can provide absolute (if low resolution) information about where the motor is in its commutation cycle, and eliminate the need to do a power-on phasing search operation.

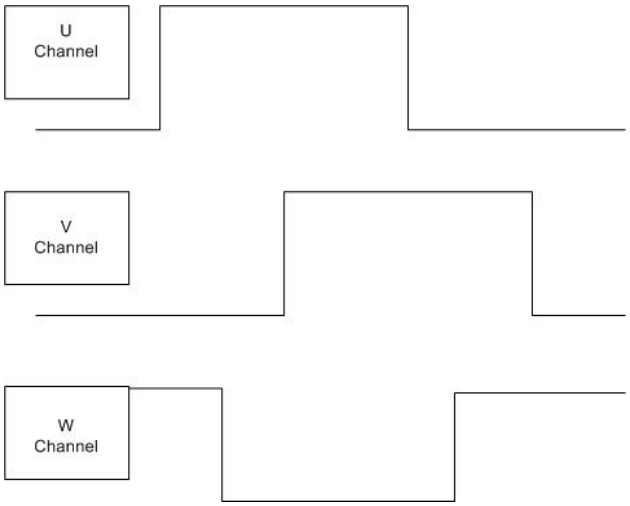

Note:

In the case of magnetic hall sensors, the feedback signals often come back to the controller in the same cable as the motor power leads. In this case, the possibility

of a short to motor power must be considered; safety considerations and industrial design codes may make it impermissible to connect the signals directly to the Turbo PMAC TTL inputs without isolation.

If used for servo position and velocity feedback, the three hall sensors are connected to the A, B, and C encoder inputs, so that the signal edges can be counted. As with quadrature encoders, these inputs can be single-ended or differential. They are not optically isolated inputs; if isolation is desired from the sensor, this must be done externally. There may be applications in which the signals are connected both to U, V, and W inputs (for power-on commutation position) and to A, B, and C inputs (for servo feedback).

Using Hall Effect Sensors for Phase Reference

There are usually four things to be considered about the alignment of the Hall Effect Sensors in order to properly set up Hall Effect phasing within the Geo Drive.

- Commutation Phase angle –based on Ixx72
- Hall Effect Transition Points
- Hall Effect Zero position with respect to PMAC's electrical zero
- Polarity of the Hall Effects – standard or reversed

Determining the Commutation Phase Angle

The commutation phase angle most likely has been set up already and it can be checked by querying the value of Ixx72. For details on how this is determined, see the Turbo User Manual under Commutation Phase angle for either Sinusoidal Commutation or Direct PWM Commutation.

	Turbo Ixx72=683	**Turbo Ixx72=1365**
Commutation Phase Angle	120 degrees	240 degrees

Finding the Hall Effect Transition Points

Usually, hall-effect sensors map out six zones of 60° elec each. In terms of PMAC2's commutation cycle, usually the boundaries will have one of two different combinations. If the Hall effect sensors are placed at 30°, 150°, and 270°, then the boundaries will be located at 180°, -120°, -60°, 0°, 60°, and 120°. Another common placement of Hall Effect Sensors has them located at 0°, 120°, and 240°. In this case, the boundaries will be located at 30°, 90°, 150°, -150°, -90°, and -30°. Typically, a motor manufacturer will align the sensors to within a few degrees of this, because these are the proper boundary points if all commutation is done from the commutation sensors. If mounting the hall-effect sensors manually, take care to align the boundaries at these points. The simplest way is to force the motor to the zero degree point with a current offset (as described below) and adjust the sensor while watching its outputs to get a boundary as close as possible to this point.

In order to determine where the Hall effect transition points are located, there must be a method of reading the status in software from the PMAC Executive Software or equivalent setup software. To do this, define M-variables to the Hall-Effects or equivalent inputs. Suggested definitions for Channel 1 are:

Turbo Ultralite		**Description**
`M124->X:$078420,0`	`M124->X:$003440,20`	Channel 1 W flag
`M125->X:$078420,1`	`M125->X:$003440,21`	Channel 1 V flag
`M126->X:$078420,2`	`M126->X:$003440,22`	Channel 1 U flag
`M127->X:$078420,3`	`M127->X:$003440,23`	Channel 1 T flag
`M128->X:$078420,0,4`	`M128->X:$003440,20,4`	Channel 1 TUVW as a 4-bit value
`M171->X:$00B4,0,24,S`	`M171->X:$00B4,0,24,S`	Channel 1 Phase Position Register
Note: Either addressing can be used with Geo MACRO drive.		

Suggested definitions for Channel 2 are:

Turbo Ultralite		Description
M224->X:$078424,20	M224->X:$003441,20	Channel 2 W flag
M225->X:$078424,21	M225->X:$003441,21	Channel 2 V flag
M226->X:$078424,22	M226->X:$003441,22	Channel 2 U flag
M227->X:$078424,23	M227->X:$003441,23	Channel 2 T flag
M228->X:$078424,20,4	M228->X:$003441,20,4	Channel 2 TUVW as a 4-bit value
M271->X:$0134,0,24,S	M271->X:$0134,0,24,S	Channel 2 Phase Position Register
Note: Either addressing can be used with Geo MACRO drive.		

Make these definitions and add these variables to the Watch window (delete other variables that no longer need to be monitored). With the motor killed, move the motor slowly by hand to verify that the inputs that should change do change.

To map the hall-effect sensors, use the current-loop six-step test, or a variant of it, to force the motor to known positions in the commutation cycle and observe the states of the hall-effect signals.

Calculating the Hall Effect Zero Point (HEZ)

The first step in finding the Hall Effect Zero point is to create a chart of the Hall Sensor Values at different points in the Electrical Cycle. Use the Current Loop 6-step method to do this. Perform the Current Loop 6-step method as described below and record the U (M126), V (M125), and W (M124) values at each step in the procedure.

Current Loop Six-Step Procedure

Commutation Phase Angle at 120° –> Ixx72= 683

Hall Sensors at 30°, 150°, and 270°

```
P179=I179   P129=I129          ; store previous offsets before test
#1o0                           ; Open loop command of zero magnitude
```

Six Step Method		U (Mx26)	V(Mx25)	W(Mx24)
I179=3000	I129=-1500 ; -30°elec.			
I179=1500	I129=1500 ; 30°elec.			
I179=-1500	I129=3000 ; 90°elec.			
I179=-3000	I129=1500 ; 150°elec.			
I179=-1500	I129=-1500 ; -150°elec.			
I179=1500	I129=-3000 ; -90°elec.			
I179=3000	I129=-1500; -30°elec.			

```
I179=P179   I129=P129          ; restore previous offsets after test
```

Hall Sensors at 0°, 120°, and 240°

```
P179=I179  P129=I129           ; store previous offsets before test
#1o0                           ; Open loop command of zero magnitude
```

Six Step Method			U (Mx26)	V(Mx25)	W(Mx24)
I179=3000	I129=0	; 0°elec.			
I179=0	I129=3000	; 60°elec.			
I179=-3000	I129=3000	; 120°elec.			
I179=-3000	I129=0	; 180°elec.			
I179=0	I129=-3000	; -120°elec.			
I179=3000	I129=-3000	; -60°elec.			
I179=3000	I129=0	; 0°elec.			

```
I179=P179  I129=P129           ; restore previous offsets after test
```

Commutation Phase Angle at 240° –> Ixx72=1365

Hall Sensors at 30°, 150°, and 270°

```
P179=I179  P129=I129          ; store previous offsets before test
#1o0                          ; Open loop command of zero magnitude
```

Six Step Method	U (M126)	V(M125)	W(M124)
I179=1500 I129=1500 ; -30°elec.			
I179=3000 I129=-1500 ; 30°elec.			
I179=1500 I129=-3000 ; 90°elec.			
I179=-1500 I129=-1500 ; 150°elec.			
I179=-3000 I129=1500 ; -150°elec.			
I179=-1500 I129=3000 ; -90°elec.			
I179=1500 I129=1500 ; -30°elec.			

```
I179=P179  I129=P129          ; restore previous offsets after test
```

Hall Sensors at 0°, 120°, and 240°

```
P179=I179  P129=I129          ; store previous offsets before test
#1o0                          ; Open loop command of zero magnitude
```

Six Step Method	U (Mx26)	V(Mx25)	W(Mx24)
I179=3000 I129=0 ; 0°elec.			
I179=3000 I129= -3000 ; 60°elec.			
I179=0 I129= -3000 ; 120°elec.			
I179=-3000 I129=0 ; 180°elec.			
I179=-3000 I129=3000 ; -120°elec.			
I179=0 I129=3000 ; -60°elec.			
I179=3000 I129=0 ; 0°elec.			

```
I179=P179  I129=P129          ; restore previous offsets after test
```

Now that the transitions have been mapped out for the sections of the electrical cycle, define and calculate the Hall Effect Zero (HEZ).

Note:

Remember to clear the offsets when finished with this test.

Hall Effect Zero (HEZ) – The Hall Effect Zero is the location in the electrical cycle when U is low (value of 0), W is high (value of 1), and V changes state either from 1 to 0 or from 0 to 1.

Example:

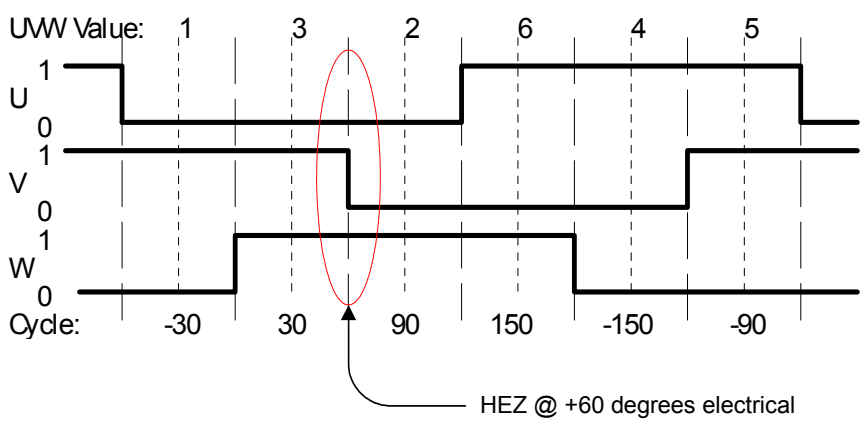

The offset can be computed using the mapping test shown above. In the example, the Hall Effect Zero (HEZ) point was found to be between +30°e and +90°e, so it is called +60°e. The offset value can be computed as:

$$Offset = \frac{HEZ\%360^{o}}{360^{o}} * 64$$

The offset computed here should be rounded to the nearest integer.

In the example, this comes to:

$$Offset = \frac{+60^{o}\%360^{o}}{360^{o}} * 64 = \frac{60^{o}}{360^{o}} * 64 = 10.667 \approx 11 = \$0B\ hex$$

Find the Hall Effect Zero and record it for use in setting up Ixx91.

Hall Effect Zero	

Determining the Polarity of the Hall Effects – Standard or Reversed

The polarity of the Hall Effects can be determined from the chart recorded in the previous section in the Current Loop 6-step procedure. The polarity depends on how the motor leads were connected with respect to the encoder direction as well as how it was wired in the hall effects with respect to the electrical cycle (in other words the U and V wires were swapped).

Standard Polarity – If the current loop 6-step is being executed in the positive direction of the electrical cycle (from –30 to 30, 90, 150,-150, -90, -30 or 0 to 60, 120, 180, -120, -60,0), the system is considered to have a standard Hall Effect polarity if the transition of V at the Hall Effect Zero is from 0 to 1.

Reversed Polarity - If the current loop 6-step is being executed in the positive direction of the electrical cycle (from –30 to 30, 90, 150, -150, -90, -30 or 0 to 60, 120, 180, -120, -60,0), the system is considered to have a reversed Hall Effect polarity if the transition of V at the Hall Effect Zero is from 1 to 0.

Refer to the chart below as an example:

An easy method to determine if the hall effects are standard or reversed (setting bit 22 for Ixx91) would be to look at the data in columns.

Ixx79	Ixx29	Electrical Cycle	U	V	W	
3000	-1500	-30	0	1	0	Positive ↑
1500	-3000	-90	1	1	0	
-1500	-1500	-150	1	0	0	
-3000	1500	150	1	0	1	
-1500	3000	90	0	0	1	
1500	1500	30	0	1	1	
3000	-1500	-30	0	1	0	

The HEZ occurs at 60° electrical. If the transition of V from 0 to 1 at the HEZ point is in the negative direction (like this example), then the hall effect sensing would be considered reversed. If the transition of V from 0 to 1 at the HEZ is in the positive direction, then the hall effect sensing would be considered standard.

Record whether the Hall Effects are setup as standard or reversed and move on to the next step of setting up the Controller setup parameters for Hall Effect Power on Phasing.

Software Settings for Hall Effect Phasing

The variables used for Hall Effect Phasing are Ixx81 and Ixx91 (Turbo). These variables are the Power on-phasing setup registers. To enable a Hall Effect Phasing on power up, configure Ixx81/Ixx91 properly and then enable the power on feature by setting Ixx80=1. The default of Ixx80 is 0 and then a phasing search will be activated only by the **$** command. It is recommended that the phasing search is set up and tested with the aid of this document and verified through the **$** command before enabling the power on phasing routine with Ixx80.

Note:

If Ixx73 and Ixx74 have a value greater than zero, then the automatic hall phasing routines will not work. Ixx73 and Ixx74 are used for the automatic step phase method.

Turbo Software Setup (Turbo PMAC2 Ultralite, UMAC, and QMAC)

Hall Effect Phasing on Turbo PMACs is setup through Ixx81 and Ixx91. Ixx81 contains address information for the Hall Effect Data and Ixx91 contains the power-on phasing mode as well HEZ and polarity information necessary for Hall Effect Phasing.

Ixx81 Hall Effect Setup for Turbo Ultralite with the Geo MACRO Drive

Hex ($)	0				7				8				4				2				0			
Bit	23	22	21	20	19	18	17	16	15	14	13	12	11	10	9	8	7	6	5	4	3	2	1	0
Value	0	0	0	0	0	1	1	1	1	0	0	0	0	1	0	0	0	0	1	0	0	0	0	0

Source Address ($78420)

or

Ixx81 Hall Effect Setup for Turbo Ultralite with the Geo MACRO Drive

Hex ($)	0				0				3				4				4				0			
Bit	23	22	21	20	19	18	17	16	15	14	13	12	11	10	9	8	7	6	5	4	3	2	1	0
Value	0	0	0	0	0	0	0	0	1	0	1	1	0	1	0	0	0	1	0	0	0	0	0	0

Source Address ($03440)

The Ixx81 setting contains the location of the Hall Effect Data and is channel dependent. The above setting is channel one on a Turbo PMAC 2 Ultralite, the address would be $3440 or $78420 (same).

Ixx91 Hall Effect Setup for Turbo

Hex ($)	C				B				0				0				0				0			
Bit	23	22	21	20	19	18	17	16	15	14	13	12	11	10	9	8	7	6	5	4	3	2	1	0
Value	1	1	0	0	1	0	1	0	0	0	0	0	0	0	0	0	0	0	0	0	0	0	0	0

Hall Effect Offset ($0B)

Reserved

Standard Hall Sense (0), Reversed Hall Sense (1)

Hall Effect Type Phase

Bit 23	This bit is always set to 1 to tell PMAC to turn on Hall Effect Phasing
Bit 22	Hall Effect Polarity- 0 for standard and 1 for reversed
Bits 16-21	HEZ in Hexadecimal format, see section 5 above.
Bits 0-15	Reserved

Example:

For a Geo MACRO drive on Axis 1 using Hall Effects with a HEZ of 60°e and reversed polarity the setting would be:

$$Offset = \frac{+60^o \% 360^o}{360^o} * 64 = \frac{60^o}{360^o} * 64 = 10.667 \approx 11 = \$0B\ hex$$

I181= $78420 or I181=$3440

Ixx91=$CB0000

Hex ($)	C				B				0				0				0				0			
Bit	23	22	21	20	19	18	17	16	15	14	13	12	11	10	9	8	7	6	5	4	3	2	1	0
Value	1	1	0	0	1	0	1	1	0	0	0	0	0	0	0	0	0	0	0	0	0	0	0	0

Hall Effect Offset ($0B)

Reserved

Reversed Hall Sense (1)

Hall Effect Type Phase (1)

Ixx81 Hall Effect Setup for Turbo Ultralite with the Geo MACRO Drive

Hex ($)	0				7				8				4				2				0			
Bit	23	22	21	20	19	18	17	16	15	14	13	12	11	10	9	8	7	6	5	4	3	2	1	0
Value	0	0	0	0	0	1	1	1	1	0	0	0	0	1	0	0	0	0	1	0	0	0	0	0

Source Address ($78420)

or

Ixx81 Hall Effect Setup for Turbo Ultralite with the Geo MACRO Drive

Hex ($)	0				0				3				4				4				0			
Bit	23	22	21	20	19	18	17	16	15	14	13	12	11	10	9	8	7	6	5	4	3	2	1	0
Value	0	0	0	0	0	0	0	0	1	0	1	1	0	1	0	0	0	1	0	0	0	0	0	0

Source Address ($03440)

The Ixx81 setting contains the location of the Hall Effect Data and is channel dependent. The above setting is Channel 1 on a Turbo PMAC 2 Ultralite and the address would be $3440 or $78420 (same).

Ixx91 Hall Effect Setup for Turbo

Hex ($)	C				B				0				0				0				0			
Bit	23	22	21	20	19	18	17	16	15	14	13	12	11	10	9	8	7	6	5	4	3	2	1	0
Value	1	1	0	0	1	0	1	1	0	0	0	0	0	0	0	0	0	0	0	0	0	0	0	0

Hall Effect Offset ($0B)

Reserved

Standard Hall Sense (0), Reversed Hall Sense (1)

Hall Effect Type Phase (1)

Bit 23	This bit is always set to 1 to tell PMAC to turn on Hall Effect Phasing
Bit 22	Hall Effect Polarity- 0 for standard and 1 for reversed
Bits 16-21	HEZ in Hexadecimal format, see section 5 above.
Bits 0-15	Reserved

Example:

For a Geo MACRO drive on Axis 1 using Hall Effects with a HEZ of 60°e and reversed polarity the setting would be:

$$Offset = \frac{+60^o \% 360^o}{360^o} * 64 = \frac{60^o}{360^o} * 64 = 10.667 \approx 11 = \$0B\ hex$$

I181= $78420 or I181=$3440

Ixx91=$CB0000

Hex ($)	C				B				0				0				0				0			
Bit	23	22	21	20	19	18	17	16	15	14	13	12	11	10	9	8	7	6	5	4	3	2	1	0
Value	1	1	0	0	1	0	1	1	0	0	0	0	0	0	0	0	0	0	0	0	0	0	0	0

Hall Effect Offset ($0B)

Reserved

Reversed Hall Sense (1)

Hall Effect Type Phase (1)

Setting I^2T Protection

It is important to set the I^2T protection for the amplifier/motor system for Turbo PMAC2 direct PWM commutation. Normally, an amplifier has internal I^2T protection because it is closing the current loop. When Turbo PMAC2 is closing the current loop, the amplifier cannot protect itself or the motor from over heating. Either set up the I^2T protection using one of the Setup Programs or set the Ixx69, Ixx57 and Ixx58 variables manually based on the following specifications:

Parameter	Description	Notes
MAX ADC Value	Maximum Current output of amplifier relative to a value of 32767 in Ixx69	GMx012xx = 7.3 A Peak GMx032xx = 14.6A Peak GMx05xxx = 16.3A Peak GMx10xxx = 32.5A Peak GMx15xxx = 48.8A Peak GMx201xx = 65 A Peak GMx301xx = 97.6A Peak x = Position in part number is irrelevant.
Instantaneous Current Limit	The lower of the amplifier or motor system	RMS or Peak*
Continuous Current Limit	The lower of the amplifier or motor system	Usually RMS
I^2T protection time	Time at instantaneous limit	Two seconds
Magnetization Current	Ixx77 value for induction motors	Only for induction motors
Servo Update Frequency	Default is 2258 Hz.	
* If specification given in RMS, multiply with x1.41 to obtain peak current for calculations.		

Example Calculations for Direct PWM commutated motor:

MAX ADC = 32.5A

Instantaneous Current Limit = 10A Peak

Continuous Current Limit = 5A RMS

I^2T protection time = 2 seconds

Magnetization Current (Ixx77) = 0

Servo Update = 2.258 kHz

$$Ixx69 = \frac{Instantaneous\ Limit(Peak)}{MAX\ ADC} x32767xCos(30°)$$

if calculated Ix69 >32767, then Ixx69 should be set equal to 32767

$$Ixx57 = \frac{Continuous\ Limit}{Instantaneous\ Limit} xIxx69$$

$$Ixx58 = \frac{Ixx69^2 + Ixx77^2 - Ixx57^2}{32768^2} \times ServoUpdateRate(Hz) \times PermittedTime(seconds)$$

Based on the above data and equations, the following results:

Ixx69= 8731

Ixx57=4366

Ixx58=240

For details about I^2T protection, refer to the safety sections of the User Manual. Details about the variable setup can be found in the Software Reference manual.

Calculating Minimum PWM Frequency

The minimum PWM frequency requirement for a system is based on the time constant of the motor. Calculate the minimum PWM frequency to determine if the amplifier will properly close the current loop. Systems with very low time constants need the addition of chokes or in-line inductive loads to allow the PMAC to properly close the current loop of the system. In general, the lower the time constant of the system, the higher the PWM frequency must be.

Calculate the motor time constant by dividing the motor inductance by the resistance of the phases.

$$\tau_{motor} = \frac{L_{motor}}{R_{motor}}$$

The relationship used to determine the minimum PWM frequency is based on the following equation:

$$\tau > \frac{20}{2\pi \times PWM(Hz)}$$

$$\therefore PWM(Hz) > \frac{20}{2\pi\tau}$$

Example:

L_{motor} = 5.80 mH

R_{motor} = 11.50 Ω

$$\tau_{motor} = \frac{5.80mH}{11.50\Omega} = 0.504m\,sec$$

Therefore, $PWM(Hz) = \frac{20}{2\pi \times (0.504m\,sec)}$ = 6316 Hz

Based on this calculation, set the PWM frequency to at least 6.32kHz.

SETTING UP DISCRETE INPUTS AND OUTPUTS

Inputs and Outputs

For the I/O Geo MACRO drive, use the 24-bit node register of the activated node. Using the I/O is accomplished by writing to a node register to activate the desired outputs and reading the same node register to read the status of the inputs. In other words, the one 24-bit node register is used for both inputs and outputs. This is efficient because it allows the 48-bits of information to be processed using one 24-bit word and minimizes the number of nodes needed for the IO data transfers for each MACRO device. The only drawback to this technique is that the user will have to keep track of the status of the outputs (see example).

Example: If node 2 is activated at both the Master and MACRO Device, make the following definitions to read and write to the inputs and outputs.

```
M3000->X:$78420,0,24        ;Actual Input/Output Word
M980->Y:$10F0,0,24          ;Input Image Word1, free user memory space
M982->Y:$10F1,0,24          ;Output Image Word1, free user memory space
M3012->X:$78420,8,4         ;four inputs
M3013->X:$78420,12,4        ;four outputs
Open PLC1 Clear
M980=M3000                  ; Input Image Word equals Actual Input Word
```

} Process Inputs and Build image output word (M982) – User code

```
M3000=M982                  ; Set Actual Output Word equal to Output Image Word1
Close
```

If using another node, access them at the following locations:

User Node	IO Word Address
2	X:$078420,0,24
3	X:$078424,0,24
6	X:$078428,0,24
7	X:$07842C,0,24
10	X:$078430,0,24
11	X:$078434,0,24
18	X:$079420,0,24
19	X:$079424,0,24
22	X:$079428,0,24
23	X:$07942C,0,24
26	X:$079430,0,24
27	X:$079434,0,24
34	X:$078420,0,24
35	X:$07A424,0,24
38	X:$07A428,0,24
39	X:$07A42C,0,24
42	X:$07A430,0,24
43	X:$07A434,0,24
50	X:$07B420,0,24
51	X:$07B424,0,24
54	X:$07B428,0,24
55	X:$07B42C,0,24
58	X:$07B430,0,24
59	X:$07B434,0,24

Bit #	Function
Bit 00	Halls W Motor 1
Bit 01	Halls V Motor 1
Bit 02	Halls U Motor 1
Bit 03	Halls T Motor 1
Bit 04	User Flag Motor 1
Bit 05	
Bit 06	
Bit 07	
Bit 08	Input 1
Bit 09	Input 2
Bit 10	Input 3
Bit 11	Input 4
Bit 12	Output 1
Bit 13	Output 2
Bit 14	Output 3
Bit 15	Output 4
Bit 16	
Bit 17	
Bit 18	
Bit 19	User Flag Motor 2
Bit 20	Halls T Motor 2
Bit 21	Halls U Motor 2
Bit 22	Halls V Motor 2
Bit 23	Halls W Motor 2

Ring Break Output indicator MS{node},MI13

In case of a ring break error, MI13 controls the Geo MACRO output lines and only as a safety feature. Choose what the output state would be in a ring break situation, High (12-24V) or Low (GND) for each individual output, depending on sinking or sourcing setup. Default MI13 equals 0, so in case of ring break, all outputs are turned off (version 1.005 and above).

Output n is enabled (True)	MS{node},MI13 - Bit	Value	Output In Case Of Ring Break Error	
			GP OUT n COL*	GP OUT n EMT**
Output 1	1	0	12-24V	0V
		1	0V	12-24V
Output 2	2	0	12-24V	0V
		1	0V	12-24V
Output 3	3	0	12-24V	0V
		1	0V	12-24V
Output 4	4	0	12-24V	0V
		1	0V	12-24V
*COM EMT (pin10) is wired to GND and pin 9 (COM COL) is let floating **COM COL (pin 9) is wired to 12-24V and pin 10 (COM EMT) is let floating				

Setting up the Analog Inputs (X6 and X7)

The MACRO Geo Drive can be ordered with two analog to digital converters (option 3/4/5). These A/D converters are 16-bit devices that are ready to be used without any software setup. Delta Tau uses the Burr Brown ADS8343 for this circuit.

The analog signals for analog input #1 are wired in to pins 5 (ADC1+) and 9 (ADC1-) of X6, and for analog input #2 into pins 5 (ADC2+) and 9 (ADC2-) of X7.

When selected for bipolar mode, differential inputs allow the user to apply input voltages to ±10 volts (20V p-p). When selected for unipolar mode, the user can apply input voltages from 0V to +10V (the negative input ADCn- must be grounded).

To read the A/D data from the MACRO device, create the M-variable definitions to the node associated with the MACRO device. The data is transferred into the upper 16-bits of the MACRO IO node registers. For example, if the Geo MACRO Drive is associated with node 2, then make the following M-variable assignment:

Unipolar

The data received is an unsigned 16-bit number scaled from 0V to +10V (0cts to 32767cts).

```
M3004->X:$78421,8,16,u        ;ADC0 upper 16 bits of IO Node 2 word1
M3005->X:$78422,8,16,u        ;ADC1 upper 16 bits of IO Node 2 word2
```

Bipolar

The data received is a signed 16-bit number scaled from –10V to +10V (-32767cts to 32767cts).

```
M3004->X:$78421,8,16,S        ;ADC0 upper 16 bits of IO Node 2 word1
M3005->X:$78422,8,16,S        ;ADC1 upper 16 bits of IO Node 2 word2
```

This example also assumes that the IO nodes are activated at both the MACRO Peripheral Device (Slave) and at the Turbo Ultralite/UMAC (Master).

The following table lists the locations of the ADCs if using other node locations.

User Node	ADC0 (X6)	ADC1(X7)
2	X:$078421,8,16,S	X:$078422,8,16,S
3	X:$078425,8,16,S	X:$078426,8,16,S
6	X:$078429,8,16,S	X:$07842A,8,16,S
7	X:$07842D,8,16,S	X:$07842E,8,16,S
10	X:$078431,8,16,S	X:$078432,8,16,S
11	X:$078435,8,16,S	X:$078436,8,16,S
18	X:$079421,8,16,S	X:$079422,8,16,S
19	X:$079425,8,16,S	X:$079426,8,16,S
22	X:$079429,8,16,S	X:$07942A,8,16,S
23	X:$07942D,8,16,S	X:$07942E,8,16,S
26	X:$079431,8,16,S	X:$079432,8,16,S
27	X:$079435,8,16,S	X:$079436,8,16,S
34	X:$07A421,8,16,S	X:$07A422,8,16,S
35	X:$07A425,8,16,S	X:$07A426,8,16,S
38	X:$07A429,8,16,S	X:$07A42A,8,16,S
39	X:$07A42D,8,16,S	X:$07A42E,8,16,S
42	X:$07A431,8,16,S	X:$07A432,8,16,S
43	X:$07A435,8,16,S	X:$07A436,8,16,S
50	X:$07B421,8,16,S	X:$07B422,8,16,S
51	X:$07B425,8,16,S	X:$07B426,8,16,S
54	X:$07B429,8,16,S	X:$07B42A,8,16,S
55	X:$07B42D,8,16,S	X:$07B42E,8,16,S
58	X:$07B431,8,16,S	X:$07B432,8,16,S
59	X:$07B435,8,16,S	X:$07B436,8,16,S

Limit and Flag Circuit Wiring

The Geo PMAC allows the use of sinking or sourcing position limits and flags to the controller. The opto-isolator IC used is a PS2705-4NEC-ND quad phototransistor output type. This IC allows the current to flow from return to flag (sinking) or from flag to return (sourcing).

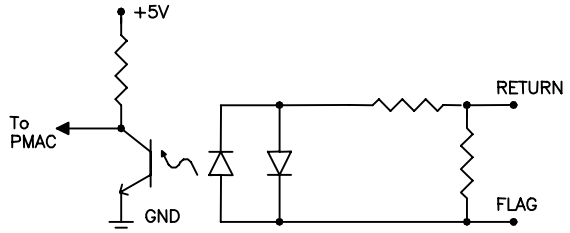

A sample of the positive limit circuit is shown below. The 4.7K resistor packs used will allow 12-24V flag inputs. If 0-5V flags are used, then a 1KΩ resistor pack (RP) can be placed in either RP7 (channel 1) or RP8 (channel 2). If these resistor packs are not added, all flags (±Limits, Home, User) will be referenced from 12-24V.

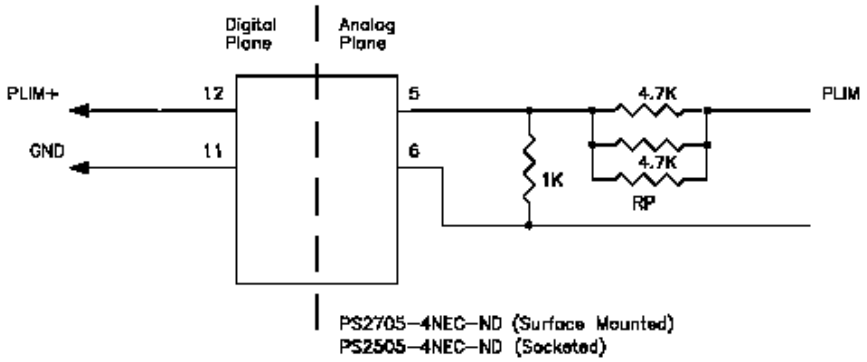

Connecting Limits/Flags to the Geo Drive

The following diagrams illustrate the sinking and sourcing connections to a Geo Drive. This example uses 12-24V flags.

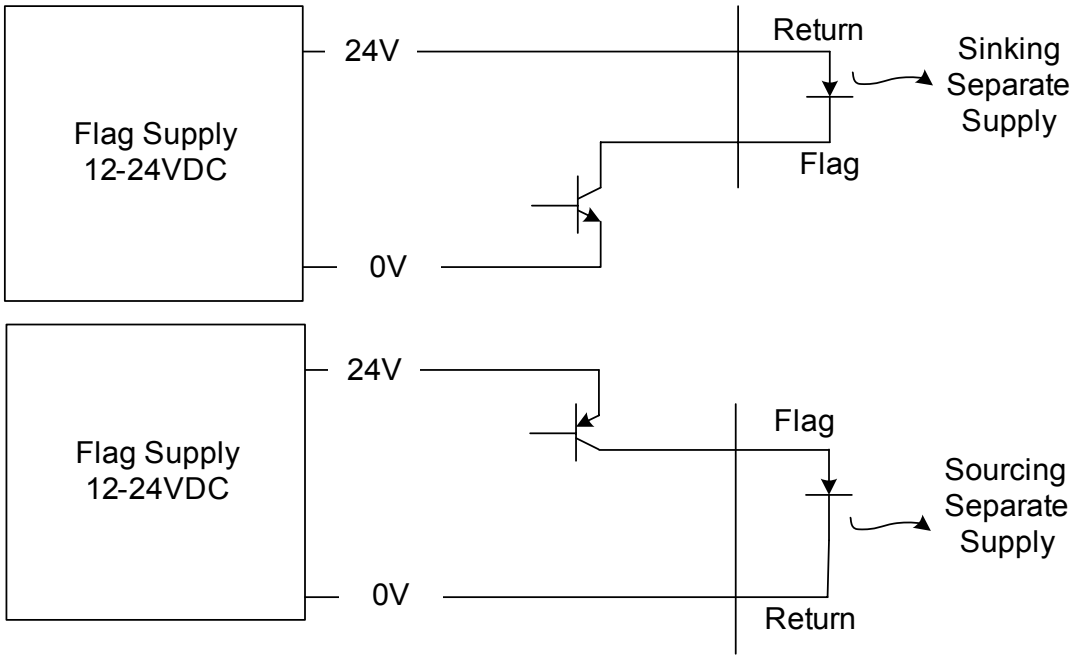

Setting up Position Compare (EQU) Outputs

The position-compare feature is a dedicated hardware circuit in the Servo ASICs that creates an output pulse when an exact encoder position is reached. Because it uses actual position, servo following errors do not affect the accuracy. Because it is a hardware feature, there are no software delays in generating the pulse.

Because it is a hardware function, it can operate asynchronously from the programmed motion sequence. For this reason, it is often managed from a PLC program if it needs to be updated more than once per programmed move.

The position-compare function works with the raw encoder position, which is referenced to the power-up/reset position because the counter is forced to zero at that time. In general, this is different from the motor zero position (home) or the axis programming zero position and it will be different every time the Turbo PMAC is powered up or reset.

To monitor the status of the actual position compare output point an M-Variable definition to bit 9 of the flag copy register (Ixx25). Using this method, the IO copy register does not need to be set up to verify the operation of the compare outputs. These data bits are updated every ring cycle.

Turbo Ultralite
`M152->X:$003440,9`
`M252->X:$003441,9`
`M352->X:$003444,9`
`M452->X:$003445,9`
`M552->X:$003448,9`
`M652->X:$003449,9`
`M752->X:$00344C,9`
`M852->X:$00344D,9`

The Position Compare Outputs (EQU Outputs) are set up using the following MACRO Node registers:

```
MS{node},MI912 Encoder n Capture Control
MS{node},MI923 Compare Auto-Increment Value
MS{node},MI925 Compare A Position Value
MS{node},MI926 Compare B Position Value
MS{node},MI928 Compare-State Write Enable
MS{node},MI929 Compare-Output Initial State
```

For Geo MACRO drives, only MS{node},MI920 was set to point to the raw ENC 24-bit counter position register (sensor counts, version 1.005 and above).

Setting up for a Single Pulse Output

If only a single compare pulse is desired (not using the auto-increment feature), the following steps should be taken:

1. Write the encoder value at the front edge into the Compare A register.
2. Write the encoder value at the back edge into the Compare B register.
3. Set the Auto-Increment register to zero.
4. Set the initial state with the direct-write feature.
5. Write a value to the initial state bit.
6. Write a 1 to the direct-write enable bit (this is self-clearing to 0).
7. Start the move that will cause the compare function.

Example: For axis 1 using node 0, with the axis sitting still at about encoder position 100 and a 1 value of position compare desired between encoder positions 1000 and 1010, the following code could be used:

```
MS0,MI925=1000              ; Set front end compare in A
```

```
MS0,MI926=1010                ; Set back end compare in B
MS0,MI923=0                   ; No auto-increment
MS0,MI929=0                   ; Prepare initial value of 0
MS0,MI928=1                   ; Enable direct write (resets immediately to zero)
{Command to start the move}
```

Setting up for Multiple Pulse Outputs

By using the auto-increment feature, it is possible to create multiple compare pulses with a single software setup operation. When the auto-increment register is a non-zero value, its value is added to or subtracted from one compare register's value automatically when the other compare value is matched. PMAC keeps track of the direction of incrementing, so only positive values should be used in the auto-increment register, even if the encoder will be counting in the negative direction.

The setup for multiple pulses is like the setup for a single pulse, except that a non-zero value must be entered into the auto-increment register and the value entered for the back edge must be that of the first back edge minus the auto-increment if the move will be positive or that of the first back edge plus the auto-increment value if the move will be negative.

In other words, the starting values to the two compare registers must "bracket" the starting position. When either compare value is matched by the encoder counter, the other compare value is incremented in the direction of movement.

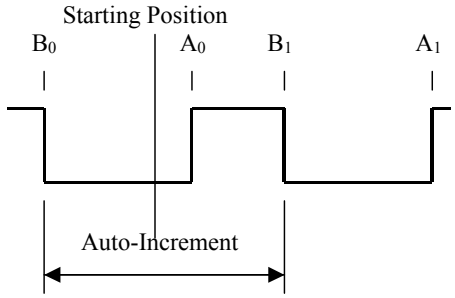

Example: Starting with the above example, the compare output should be between 1000 (A_0) and 1010 (B_1) counts, but add an auto-increment value of 2000 counts with a starting position of about 100 counts. The program code to start the sequence could be:

```
MS0,MI925=2000                ; Auto-increment of 2000 encoder counts
MS0,MI926=1000                ; First front edge (A0) at 1000 counts
MS0,MI923=(1010-1000)         ;[1010-MS0,MI926]First back edge (B1) at 1010 counts
MS0,MI929=0                   ; Prepare initial value of 0
MS0,MI928=1                   ; Enable direct write (resets immediately to zero)
```

CONNECTORS

Connector Pinouts

X1: Encoder Input 1

The main encoder input channels for the Geo Drive, supports a variety of encoder feedback types. 5V supply to power the encoder is provided and also four digital Hall sensors (UVWT) for phasing.

Quadrature Encoder Input, or SSI Absolute Encoders. Optional: Sinusoidal Encoder Input with x4096 Interpolation, Resolver Feedback, Endat and Hiperface Interfaces.

X1 Encoder Input 1 (DB-25 Female Connector)				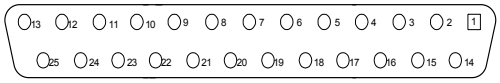
Pin #	**Digital /SSI Encoder Symbol**	**Sinusoidal Encoder Symbol***	**Resolver Symbol***	**Use for Incremental Encoder/Sinusoidal Encoder/Resolver**
1	ChA1+	Sin1+	N/A	Axis 1 Encoder A+/Encoder Sine+/Not used
2	ChB1+	Cos1+	N/A	Axis 1 Encoder B+/Encoder Cosine+/Not used
3	Index1+	Index1+	N/A	Axis 1 Encoder Index+/Encoder Index+/Not used
4	N/A	N/A	ResSin1+	Axis 1 Not used/Not used/Resolver Sine+
5	N/A	N/A	ResCos1+	Axis 1 Not used/Not used/Resolver Cosine+
6	CLK+	AltSin1+/CLK+	N/A	Axis 1 SSI Clock+/Power On Position Sine+, for Endat output CLK+/Not used
7	DAT+	AltCos1+/DAT+	N/A	Axis 1 SSI Data-/Power On Position Cosine+, for Endat input DATA+/Not used
8	ChU1+	ChU1+	ChU1+	Axis 1 U Commutation+
9	ChW1+	ChW1+	ChW1+	Axis 1 W Commutation+
10	BVREF1			Axis 1 Buffered 2.5 Volt Reference
11	N/A	N/A	ResOut1	Axis 1 Not used/Not used/Resolver Excitation Output
12	Encoder Power1	Encoder Power1	N/A	Encoder PWR/Encoder PWR/Not used. 5VDC
13	GND			Common
14	ChA1-	Sin1-	N/A	Axis 1 Encoder A-/Encoder Sine-/Not used
15	ChB1-	Cos1-	N/A	Axis 1 Encoder B-/Encoder Cosine-/Not used
16	Index1-	Index1-	N/A	Axis 1 Encoder Index-/Encoder Index-/Not used
17	N/A	N/A	ResSin1-	Axis 1 Not used/Not used/Resolver Sine-
18	N/A	N/A	ResCos1-	Axis 1 Not used/Not used/Resolver Cosine-
19	CLK-	AltSin1-/CLK-	N/A	Axis 1 SSI Clock-/Power On Position Sine-, for Endat output CLK-/Not used
20	DAT-	AltCos1-/DAT-	N/A	Axis 1 SSI Data-/Power On Position Cosine-, for Endat input DATA-/Not used
21	ChV1+	ChV1+	ChV1+	Axis 1 V Commutation+
22	ChT1+	ChT1+	ChT1+	Axis 1 T Commutation+
23	1_In_Therm_Mot			Motor 1 Thermal Input Switch
24	+5V			Axis 1, +5V Supply
25	GND			Common

X2: Encoder Input 2

The main encoder input channels for the Geo Drive, supports a variety of encoder feedback types. 5V supply to power the encoder is provided and also four digital Hall sensors (UVWT) for phasing.

Quadrature Encoder Input, or SSI Absolute Encoders. Optional: Sinusoidal Encoder Input with x4096 Interpolation, Resolver Feedback, Endat and Hiperface Interfaces.

X2 Encoder Input 2 (DB-25 Female Connector)				13 12 11 10 9 8 7 6 5 4 3 2 1 25 24 23 22 21 20 19 18 17 16 15 14
Pin #	**Digital / SSI Encoder Symbol**	**Sinusoidal Encoder Symbol***	**Resolver Symbol***	**Use for Incremental Encoder/Sinusoidal Encoder/Resolver**
1	ChA2+	Sin2+	N/A	Axis 2 Encoder A+/Encoder Sine+/Not used
2	ChB2+	Cos2+	N/A	Axis 2 Encoder B+/Encoder Cosine+/Not used
3	Index2+	Index2+	N/A	Axis 2 Encoder Index+/Encoder Index+/Not used
4	N/A	N/A	ResSin2+	Axis 2 Not used/Not used/Resolver Sine+
5	N/A	N/A	ResCos2+	Axis 2 Not used/Not used/Resolver Cosine+
6	CLK+	AltSin2+/CLK+	N/A	Axis 2 SSI Clock+/Power On Position Sine+, for Endat output CLK+/Not used
7	DAT+	AltCos2+/DAT+	N/A	Axis2 SSI Data+/Power On Position Cosine+, for Endat input DATA +/Not used
8	ChU2+	ChU2+	ChU2+	Axis 2 U Commutation+
9	ChW2+	ChW2+	ChW2+	Axis 2 W Commutation+
10	BVREF2			Axis 2 Buffered 2.5 Volt Reference
11	N/A	N/A	ResOut2	Axis 2 Not used/Not used/Resolver Excitation Output
12	Encoder Power2	Encoder Power2	N/A	Relay-Controlled Power/Relay-Controlled Power/Not used Default is Power ON, 5V
13	GND			Common
14	ChA2-	Sin2-	N/A	Axis 2 Encoder A-/Encoder Sine-/Not used
15	ChB2-	Cos2-	N/A	Axis 2 Encoder B-/Encoder Cosine-/Not used
16	Index2-	Index2-	N/A	Axis 2 Encoder Index-/Encoder Index-/Not used
17	N/A	N/A	ResSin2-	Axis 2 Not used/Not used/Resolver Sine-
18	N/A	N/A	ResCos2-	Axis 2 Not used/Not used/Resolver Cosine-
19	CLK-	AltSin2-/CLK-	N/A	Axis 2 SSI Clock-/Power On Position Sine-, for Endat output CLK-/Not used
20	DAT-	AltCos2-/DAT-	N/A	Axis 2 SSI Data -/Power On Position Cosine-, for Endat input DATA-/Not used
21	ChV2+	ChV2+	ChV2+	Axis 2 V Commutation+
22	ChT2+	ChT2+	ChT2+	Axis 2 T Commutation+
23	2_In_Therm_Mot			Motor 2 Thermal Input Switch
24	+5V			Axis 2, +5V Supply
25	GND			Common

* The Analog Feedback Option 1 or 4 is required for these functions.
** The Serial Encoder Feedback Option 2 or 5 is required for these functions

X3: General Purpose I/O

Discrete I/O is available on the Geo Drive. All I/O is electrically isolated from the drive. Outputs can be configured for sink or source applications. All I/O is 24V nominal operation. Outputs are rated 0.5A maximum current. Outputs are robust against ESD and overload. All Flag inputs are very fast acting.

X3 General Purpose I/O 24-pin Terminal Blocks
The connector is two 12-pin screw Phoenix terminals.

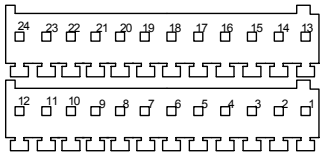

Pin #	Symbol	Function	Description
1	GP OUT 1 COL	Output	Output 1*
2	GP OUT 1 EMT	Output	Output 1**
3	GP OUT 2 COL	Output	Output 2*
4	GP OUT 2 EMT	Output	Output 2**
5	GP OUT 3 COL	Output	Output 3*
6	GP OUT 3 EMT	Output	Output 3**
7	GP OUT 4 COL	Output	Output 4*
8	GP OUT 4 EMT	Output	Output 4**
9	COM COL	Input	Common Collector
10	COM EMT	Input	Common Emitter
11	GP IN 1	Input	Input 1
12	GP IN 2	Input	Input 2
13	GP IN 3	Input	Input 3
14	GP IN 4	Input	Input 4
15	I/O RTN	Input	Return for all Inputs
16	FLG RTN	Input	Return for all Flags
17	PLIM1	Input	Positive limit 1
18	MLIM1	Input	Negative limit 1
19	HOME1	Input	Home flag 1
20	USER1	Input	User Flag 1
21	PLIM2	Input	Positive Limit 2
22	MLIM2	Input	Negative Limit 2
23	HOME2	Input	Home flag 2
24	USER2	Input	User flag 2

The Geo MACRO Drive limit and flag circuits also give the flexibility to wire in standard 12V to 24V limits and flags or wire in 5V level limits and flags on a channel basis.
The default is set for the standard 12V to 24V inputs but if the resistor pack is added to the circuit, the card can read 5V inputs. If RP7 (limits 1) and RP8 (limits 2) are installed in the unit, the voltage level of the flags can be lowered to 5V.

- RP7 and RP8 for 5V: 1Kohm Sip, 8-pin, four independent Resistors
- RP7 and RP8 for 12-24V: Empty bank

* For Sinking Outputs, connect the COM EMIT (pin10) line to Common GND (Analog Ground) and the outputs to the individual collector Output lines, e.g. GP OUT 1 COL.

** For Sourcing Outputs, connect the COM COL (pin9) line to 12-24V and the outputs to the individual emitter output lines, e.g., GP OUT 1 EMT.

Topologies cannot be mixed, i.e., all sinking or all sourcing outputs. If the common emitter is used, the common collector should be unconnected. Conversely, if the common collector is used, the common emitter should be unconnected.
Part Type: FKMC 0,5/12-ST-2,5 p/n: 18 81 42 0

X4: Safety Relay (Optional)

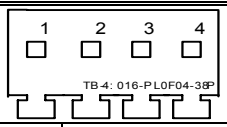

Pin #	Symbol	Function
1	RELAY WA	Safety Input 24V
2	RELAY WB	Safety Input Return
3	RELAY COM	Common
4	RELAY N/O	Relay Normally Open

If the Safety Relay option is installed, there is a dedicated Safety Input @24VDC (user supplied). When the Safety Input is asserted, then the hardware will cut the 20V power to the gate drive which will prevent all output from the power stage (the Gate Enable LED will turn off). If the user doesn't need to use the Safety Input and the drive has it installed, the user has to bypass it by wiring a 24VDC input to WA (pin 1) and the return (24VDC) to WB (pin 2).

Note:

There are no software configurable parameters to enable/disable or otherwise manipulate the Safety Input functionality.

X6: Analog IN 1 (Optional 3/4/5)

16-Bit A/D Converter

X6: Analog In (DB-9 Female Connector)			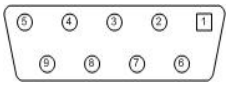	
Pin #	**Symbol**	**Function**	**Description**	**Notes**
1	AMP_FLT1-	Output	Amplifier fault	Low is fault
2	AENA1	Output	Amp enable	
3	NC		Not connected	
4	GND	Common	Common	Analog ground for A/D
5	ANALOG0+	Input	Command level	+/-10v
6	AMP FLT1+	Output	Amplifier fault	High is true
7	PMAC GND	Common	PMAC common	For AMP fault
8	N.C.		Not connected	
9	ANALOG0-	Input	Command level	+/-10v

X7: Analog IN 2 (Optional 3/4/5)

16-Bit A/D Converter

X7: Analog In (DB-9 Female Connector)			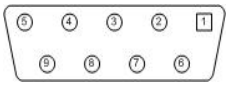	
Pin #	**Symbol**	**Function**	**Description**	**Notes**
1	AMP_FLT2-	Output	Amplifier fault	Low is fault
2	AENA2	Output	Amp enable	
3	NC		Not Connected	
4	GND	Common	Common	Analog Ground for A/D
5	ANALOG1+	Input	Command level	+/-10v
6	AMP FLT2+	Output	Amplifier fault	High is True
7	PMAC GND	Common	PMAC Common	For AMP Fault
8	N.C.		Not Connected	
9	ANALOG1-	Input	Command level	+/-10v

X8: S. Encoder 1

The Secondary Encoder channel #1 allows an external encoder to be fed back on the controller. A 5V supply is available for the encoder power at pin 4. The three differential signal channels are brought into the remaining pins as indicated. Standard for drives that use control board 603542 rev-10A and above.

X8 S. Enc. 1 (DB-9 Female Connector)			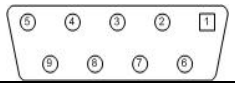
Pin #	**Symbol**	**Function**	**Notes**
1	Cha1+	Input	Secondary Encoder 1 A+
2	Chb1+	Input	Secondary Encoder 1 B+
3	Index1+	Input	Secondary Encoder 1 Index + /C+
4	5V	Out	Encoder Power
5	GND	Out	Common
6	Cha1-	Input	Secondary Encoder 1 A-
7	Chb1-	Input	Secondary Encoder 1 B-
8	Index1-	Input	Secondary Encoder 1 Index - /C-
9	N.C.		Not Connected

X9: S. Encoder 2

The Secondary Encoder channel #2 allows an external encoder to be fed back on the controller. A 5V supply is available for the encoder power at pin 4. The three differential signal channels are brought into the remaining pins as indicated. Need to enable the MACRO nodes MS{node}, I996 and the MACRO IC nodes I6841/I6891/I6941/I6991. Standard for drives that use control board 603542 rev-10A and above.

X9 S. Enc. 2 (DB-9 female Connector)			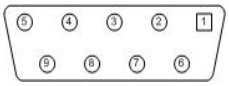
Pin #	**Symbol**	**Function**	**Notes**
1	Cha2+	Input	Secondary Encoder 2 A+
2	Chb2+	Input	Secondary Encoder 2 B+
3	Index2+	Input	Secondary Encoder 2 Index + /C+
4	5V	Out	Encoder Power
5	GND	Out	Common
6	Cha2-	Input	Secondary Encoder 2 A-
7	Chb2-	Input	Secondary Encoder 2 B-
8	Index2-	Input	Secondary Encoder 2 Index - /C-
9	N.C.		Not Connected

X13: Discrete I/O

X13: Discrete I/O, 6-pin Phoenix Terminal Block			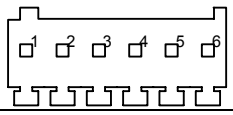
Pin#	**Symbol**	**Function**	**Notes**
1	+24V	In/Out	Interconnected with J4, 24VDC
2	24VRTN	In/Out	Interconnected with J4, 24VDC
3	+5V	Output	PMAC 5V
4	EQU1-	Output	Position Compare 1, 0V to 5V
5	EQU2-	Output	Position Compare 2, 0V to 5V
6	GND	Common	PMAC GND
Part Type: FKMC 0,5/6-ST-2,5 p/n: 18 81 36 7			

Position Compare Port Driver IC

As with the other PMAC controllers, the Geo drive has high-speed position compare outputs allowing the firing of an output based on position. This circuit will fire within 100 nsec of reaching the desired position. The position compare output port on the Geo MACRO drive has driver IC at component U1A and U1B. This IC gives a fast CMOS driver.

Part	# of Pins	Max Voltage and Current	Output Type	Max Frequency
DS75452N	8	5V, 10 mA	Totem-Pole (CMOS)	5 MHz

J1: AC Input Connector Pinout

Pin #	Symbol	Function	Description	Notes
1	L3	Input	Line Phase 3	40VAC to 480VAC
2	L2	Input	Line Phase 2	
3	L1	Input	Line Phase 1	
On Gxx201xx and Gxx301xx, there is a fourth pin for Ground connection. Connector is located at the bottom side of the unit.				

J2: Motor 1 Output Connector Pinout

Pin #	Symbol	Function	Description	Notes
1	U	Output	Axis 1 Phase1	
2	V	Output	Axis 1 Phase2	
3	W	Output	Axis 1 Phase3	
On Gxx201xx and Gxx301xx, there is a fourth pin for Ground connection. Connector is located at the top side of the unit.				

J3: Motor 2 Output Connector Pinout (Optional)

Pin #	Symbol	Function	Description	Notes
1	U	Output	Axis 2 Phase1	2- Axis drives only
2	V	Output	Axis 2 Phase2	2- Axis drives only
3	W	Output	Axis 2 Phase3	2- Axis drives only

J4: 24VDC Input Logic Supply Connector

Pin #	Symbol	Function	Description	Notes
1	24VDC RET	Common	Control power return	
2	+24VDC	Input	Control power input	24V+/-10%, 2A
Connector is located at the bottom side of the unit.				

J5: External Shunt Connector Pinout

Pin #	Symbol	Function
1	Regen+	Output
2	Regen-	Output
Connector is located at the top side of the unit		

MACRO Link Connectors

The unit can be ordered to use either RJ45 connectors with twisted pair copper wires or a fiber optic connection.

GMxxxxFx	Fiber Optic MACRO Link
GMxxxxRx	RJ-45 MACRO Link

In either case, there will be an input and an output connector and both are used to connect to the MACRO link. The input connector is tied to the MACRO output connector of the previous device on the link. The output connector connects to the input MACRO connector of the next device on the link.

X5: MACRO I/O, MACRO Fiber Optic Transceiver (Optional)

Order Geo MACRO drive GMxxxxFx (F stands for Fiber Optic Macro Link).

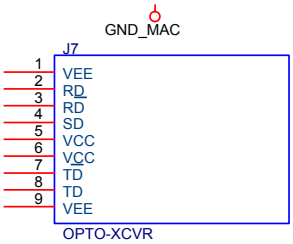

FIBER XCVR

Double SC Fiber-Optic Socket

D20 is a MACRO LED which indicates the Link Activity.

LED	Description
Green	Activity, there is link
Red	Link fault, no link. Check that the cables are correct in and out. A bad cable can be the reason also.

X10 and X11 MACRO RJ-45 Copper Connectors

Order Geo MACRO drive GMxxxxRx (R stands for RJ-45 Copper Macro Link).

X10 – MACRO Output Connector
X11 – Input Connector

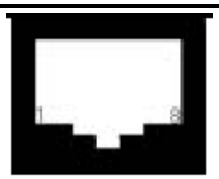

Front View

Pin #	Symbol	Function	Description
1	DATA+	Data +	Differential MACRO Signal.
2	DATA-	Data -	Differential MACRO Signal
3	Unused		Unused terminated pin
4	Unused		Unused terminated pin
5	Unused		Unused terminated pin
6	Unused		Unused terminated pin
7	Unused		Unused terminated pin
8	Unused		Unused terminated pin

The cable used for the MACRO wired connections is a CAT5 verified straight-through 8 conductor. The input connector is tied to the MACRO output connector of the previous device on the link. The output connector connects to the input MACRO connector of the next device on the link.

USB Connector

This connector is used to perform software diagnostic procedures or to download the operational firmware. This connector is used in conjunction with the Pewin32 Pro or equivalent software package.

X12: USB Universal Serial Bus Port

Pin #	Symbol	Function
1	VCC	N.C.
2	D-	DATA-
3	D+	DATA+
4	GND	GND
5	SHELL	SHIELD
6	SHELL	SHIELD

This connector is used only to change the operational firmware or to perform basic software diagnostic operations. The user can use a serial port terminal window such as Microsoft® HyperTerminal to communicate with the MACRO Device. Set the serial port communication settings as follows:

Baud Rate: 38400
Data Bits: 8
Parity: None
Stop Bits: 1
Flow Control: None

If Pewin32 Pro software is installed, then the USB device should be recognized by the operating system. If Windows does not recognize the device, contact the factory for assistance.

TROUBLESHOOTING

The Geo MACRO utilizes a scrolling single-digit 7-segment display. When control power is applied to the drive, the 7-segment display will have a blinking "." (Period)) (rate of 50% of the duty cycle) indicating that the software and hardware are running normally. This blinking period is running all of the time except if the PMAC CPU has faulted, then it stays on. When any of the drive's output sections is enabled, the display will include a "0". When all axes are not enabled and there is no Fault, the display will be blank with the blinking "." (Period).

Error Codes

In most cases, the Geo Drive communicates error to the Status Display (D1). The same message can be monitored via the MACRO Ring, Status Word and MS{node},MI4. Not all errors reflect a message back to the host. In these cases, the no-message errors communicate only to the Status Display.

The response of the Geo Drive to an error depends on the error's severity. There are two levels of severity:

1. Warnings (simply called errors and not considered faults and do not disable operation).
2. Fatal errors (fatal faults that disable almost all drive functions, including communications).

Note:

The Geo Drive automatically disables at the occurrence of a fault.

The drive will produce a 2-character scrolling display whenever a fault on any axis exists, when in ASCII mode it will produce a 3-character scrolling display starting with an A followed with the normal code. The scrolling display begins with an E followed by the specific fault code. There is a blank pause between the first code and the fault code of the scrolling display to distinguish between the beginning and the end of the scrolling codes. The table below lists the fault codes.

Note:

If in ASCII mode and an error occurs, then the display will first show an A (for ASCII), followed by the fault code, see table below.

(Added to firmware 1.006 and above)

D1: Geo MACRO Drive Status Display Codes

The 7-segment display on the current model, 16 numeric codes plus two decimal points, provides the following codes:

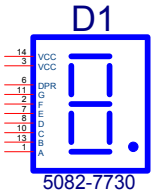

Display Fault code	Description	Notes/Cause
E1	I^2T Current Fault – Axis 1	An internal timer has noticed that Axis 1 is taking more RMS current than the drive was designed to produce. Reduce loading.
E2	Over Current Fault – Axis 1	Over current sensors have detected an excess of current through the motor leads. Typically, bad setup information (check Ix69) or overshoots in the current loop, or voltage commands from the controller through the power stage.
E3	Output Short Circuit – Axis 1	The output of the drive has been shorted together or to ground. Do not reset drive until condition has been cleared. Do not reset drive for at least 60 seconds. Check wiring if the motor cable is disconnected and the fault insists sent the drive for RMA
E4	IGBT Over Temp - Axis 1	IGBT temperature is above a factory pre-set range (approximately 85 ºC). Drawing excessive current through the amplifier, blocked airflow through the amplifier or operation in an ambient temperature above 45 ºC.

E5	Motor Over Temp - Axis 1 Warning	Normally closed input on the front of the Geo drive amplifier connector X1. Motor over Temp is detected in open circuit. With firmware 1.006 this function is not enabled default, to enable it user needs to set MS{node}, MI100. To disable this function for older firmware drives ground (pin 13/25) to pin 23 (temp input).
E6	I^2T Current Fault – Axis 2	An internal timer has noticed that Axis 1 is taking more RMS current than the drive was designed to produce. Reduce loading.
E7	Over Current Fault - Axis 2	Over current sensors have detected an excess of current through the motor leads. Typically, bad setup information (check Ix69) or overshoots in the current loop, or voltage commands from the controller through the power stage.
E8	Output Short Circuit – Axis 2	The output of the drive has been shorted together or to ground. Do not reset drive until condition has been cleared. Do not reset drive for at least 60 seconds. Check wiring if the motor cable is disconnected and the fault insists sent the drive for RMA
E9	IGBT Over Temp - Axis 2	IGBT temperature is above a factory pre-set range (approximately 85 ºC). Drawing excessive current through the amplifier, blocked airflow through the amplifier or operation in an ambient temperature above 45 ºC.
EA	Motor Over Temp - Axis 2 Warning	Normally closed input on the front of the Geo drive amplifier connector X2. Motor over Temp is detected in open circuit. With firmware 1.006 this function is not enabled default, to enable it user needs to set MS{node}, MI100. To disable this function for older firmware drives ground (pin 13/25) to pin 23 (temp input).
Eb	Over Voltage	The bus voltage has exceeded a factor pre-set threshold of 820V for 480V drives or 420V for 230V drives. Lack of ability to dump the regenerated energy from the motor. A shunt regulator or dump resistor can help GAR48 or GAR78. Another common cause can be excessively high input line voltage.
EC	Under Voltage	The DC bus internal to the Geo drive has decreased below a factory pre-set threshold of 16 to 30Vdc (no AC input power to the drive).
Ed	Shunt Regulator Fault	Excessive shunt regulator current fault. Check wiring to the shunt regulator resistor to ensure that no short across the resistor or to ground exists. Do not reset drive for at least 60 seconds.
EF	Gate Drive Power Fault	Gate power (+20V) was not detected. This fault can occur if the outputs are shorted and the mains for the DC bus are not on. Check output wiring to ensure no shorts exists from wire to wire or from any wire to ground. If safety relay option ordered, must supply 24V DC to satisfy.
Eh	Encoder Loss #1	Encoder loss for encoder #1 (quadrature or sinusoidal). Check your encoder wiring, the encoder power, and the Encoder. (added at 1.006 firmware and above)
EH	Encoder Loss #2	Encoder loss for encoder #2 (quadrature or sinusoidal). Check your encoder wiring, the encoder power, and the Encoder. (added at 1.006 firmware and above)

MACRO Network Errors

Display	Description	Notes/Cause
0	Normal Operation	Normal Operation with decimal point blinking
b	MACRO Taxi Fault	Possible break somewhere in the fiber or copper network wiring
C	MACRO Sync Fault	A node may exist that has not been enabled on the Master
d	MACRO Ring Fault	Too much, or too little data from node

Status LEDs

LED	Function	Color	Description
EN1	Enable Axis 1	Green/Red	Green when first axis enabled. Red when drive is not enabled. (Unlit does not necessarily mean fault.)
EN2	Enable Axis 2	Green/Red	Green when second axis enabled. Red when drive is not enabled. (Unlit does not necessarily mean fault.)
REG		Yellow	Lit when drive is attempting to dump power through the external shunt regulator regen resistor.
+5V		Green	Lit when 5V logic has power.
Gate Enable	Gate Enable	Green	Lit when Gate is Enabled
MACRO	MACRO Ring OK	Red/Green	Green when MACRO ring operating properly. Red when there is a MACRO ring error. Cables could be reversed
DC Bus		Red	Lit when bus is powered.

Geo MACRO Drive Ring Status Error Codes

MS{node},MI4 Geo MACRO Status Word (Read Only)

Range: $00000000 - $FFFFFFFF

Units: Bits

This variable, when queried, reports the value of the current status word bits for the Geo MACRO Station. The value reported should be broken into bits. Each bit reports the presence or absence of a particular fault on the Station. If the bit is 0, the fault has not occurred since Station faults were last cleared. If the bit is 1, the fault has occurred since Station faults were last cleared.

Bit #	Fault	Notes
0	MTR 1 Over Current	Motor #1 Over current, display “E2” or “AE2”
1	MTR 2 Over Current	Motor #2 Over current, display “E7” or “AE7”
2	MTR 1 Output Short Circuit	Motor #1 Short Circuit, display “E3” or “AE3”
3	MTR 2 Output Short Circuit	Motor #2 Short Circuit, display “E8” or “AE8”
4	MTR 1 Over Temperature	Motor #1 Over Temperature, display “E5” or “AE5”
5	MTR 2 Over Temperature	Motor #2 Over Temperature, display “EA” or “AEA”
6	MTR 1 IGBT Over Temperature	IGBT #1 Over Temperature, display “E4” or “AE4”
7	MTR 2 IGBT Over Temperature	IGBT #2 Over Temperature, display “E9” or “AE9”
8	Encoder 1 Loss	Encoder #1 Loss, display “Eh” or “AEh”, check MS{node},MI100 and MS{node},MI107
9	Encoder 2 Loss	Encoder #2 Loss, display “EH” or “AEH” check MS{node},MI100 and MS{node},I108
10-16	(Reserved for future use)	
17	Ring Fault – Taxi Error	Global Fault, Ring Break, display “b”
18	Ring Fault – Synch Packet	Global Fault, Node 15 Synch Packet Fault determined by MI10 , display “C”
19	Ring Fault – Ring Errors	Global Fault, Exceeded Ring Error in MI9, display “d”
20	Bus Under Voltage Fault	Global Fault, display “EC” or “AEC”
21	Bus Over Voltage Fault	Global Fault, display “EB” or “AEB”
22	De-saturated Shunt Fault	Global Fault, display “ED” or “AED”
23	DC to DC Power Supply Fault	Global Fault, display “EF” or “AEF”

Any of the fault bits that are set can be cleared with the **`MSCLRF{node}`** (clear fault) command, or the **`MS$$${node}`** (Station reset) command.

MS{node},MI6 Status Word Control

	Value	Function
MS{node},MI6	0	Ring Status Word
MS{node},MI6	1	Bus Voltage value

Status Word

X-register via the 3d IO node, 16-bit register

Bit	Value		Description
0	$0001	MTR1_OC	Motor #1 Over current, display “E2” or “AE2”
1	$0002	MTR2_OC	Motor #2 Over current, display “E7” or “AE7”
2	$0004	MTR1_SC	Motor #1 Short Circuit, display “E3” or “AE3”
3	$0008	MTR2_SC	Motor #2 Short Circuit, display “E8” or “AE8”
4	$0010	MTR1_OT	Motor #1 Over Temperature, display “E5” or “AE5”
5	$0020	MTR2_OT	Motor #2 Over Temperature, display “EA” or “AEA”
6	$0040	IGBT1_OT	IGBT #1 Over Temperature, display “E4” or “AE4”
7	$0080	IGBT2_OT	IGBT #2 Over Temperature, display “E9” or “AE9”
8	$0100	MTR1_ELOS	Encoder #1 Loss, display “Eh” or “AEh”
9	$0200	MTR2_ELOS	Encoder #2 Loss, display “EH” or “AEH
9	$0200	TAXI_ERR	Ring Break Violation
10	$0400	SYNC_ERR	Bad Sync Package
11	$0800	RING_ERR	Checksum Error (bad data)
12	$1000	UNDER_VOLTS	Under Voltage
13	$2000	OVER_VOLTS	Over Voltage
14	$4000	SHUNT_FAULT	Shunt Regulator Fault
15	$8000	GD_FAULT	Gate Drive Fault (DC to DC converter fault)
Note: bit 9 is two functions overlapping, it will have the value of the error that got triggered first			

TURBO PMAC2 RELATED I-VARIABLE REFERENCE

Ixx10: Motor xx Power-On Servo Position Address

Range: $000000 - $FFFFFF

Units: Turbo PMAC or Multiplexer Port Addresses

Default: $0

Ixx10 controls whether Turbo PMAC reads an absolute position sensor for Motor xx on power-up/reset and/or with the **$*** or **$$*** commands. If an absolute position read is to be done, Ixx10 specifies what register is read for that absolute position data. Ixx95 specifies how the data in this register is interpreted.

If Ixx10 is set to 0, no absolute power-on/reset position read is performed. The power-on/reset position is considered to be zero, even if an absolute sensor reporting a non-zero value is used. Ixx10 should be set to 0 when an incremental position sensor is used; a homing search move is typically then executed to establish a position reference.

If Ixx10 is set to a non-zero value, an absolute position read is performed for Motor xx at power-on/reset, from the register whose location is specified in Ixx10 (unless Bit 2 of Ixx80 is set to 1). This is either the address of a Turbo PMAC register, the multiplexed data address on the Multiplexer Port, or the number of the MACRO node on the Turbo PMAC, depending on the setting of Ixx95. The motor's position is set to the value read from the sensor location the Ixx26 home offset value.

Ixx10 is used only on power-on/reset, when the **$*** command is issued for the motor, or when the **$$*** command is issued for the coordinate system containing the motor. To get a new value of Ixx10 to take effect, either the **$*** or **$$*** command must be issued, or the value must be stored to non-volatile flash memory with the **SAVE** command, and the board must be reset.

Note:

Variable Ixx81 (with Ixx91) performs the same power-on position read function for the phasing (commutation) algorithm.

R/D Converter Read: If Ixx95 is set to a value from $000000 to $070000, or from $800000 to $870000, the address specified in Ixx10 is a Multiplexer Port address. Turbo PMAC will read the absolute position from an Acc-8D Opt 7 Resolver-to-Digital Converter board at that port address, as set by DIP switches on the board. Ixx95 specifies which R/D converter at that address is read, and whether it is treated as a signed or unsigned value.

If Ixx99 is greater than 0, the next R/D converter at that port address is also read as a second geared-down resolver, with Ixx99 setting the gear ratio. If Ixx98 is also greater than 0, the next R/D converter past that one at the same port address is read as a third geared-down resolver, with Ixx98 setting the gear ratio.

In this mode, bits 1 through 7 of Ixx10 match the settings of DIP-switches SW1-2 through SW1-8, respectively, on the Acc-8D Opt 7 R/D Converter board. A CLOSED (ON) switch represents a 0 value; an OPEN (OFF) switch represents a 1 value. Bit 0 and bits 9 through 23 of Ixx10 are always set to 0 in this mode; bit 8 is only set to 1 if all other bits are 0.

The following table shows the common Multiplexer Port addresses that can be used. Note that address 0 uses an Ixx10 value of $000100, because Ixx10=0 disables the absolute position read function.

Ixx10 for Acc-8D Option 7 Resolver/Digital Converter
(Ixx95=$000000 - $070000, $800000 - $870000) Addresses are Multiplexer Port Addresses

Board Mux. Addr.	Ixx10	Board Mux. Addr.	Ixx10	Board Mux. Addr.	Ixx10	Board Mux. Addr.	Ixx10
0	$000100	64	$000040	128	$000080	192	$0000C0
8	$000008	72	$000048	136	$000088	200	$0000C8
16	$000010	80	$000050	144	$000090	208	$0000D0
24	$000018	88	$000058	152	$000098	216	$0000D8
32	$000020	96	$000060	160	$0000A0	224	$0000E0
40	$000028	104	$000068	168	$0000A8	232	$0000E8
48	$000030	112	$000070	176	$0000B0	240	$0000F0
56	$000038	120	$000078	184	$0000B8	248	$0000F8

Parallel Word Read: If Ixx95 is set to a value from $080000 to $300000, from $480000 to $700000, from $880000 to $B00000, or from $C80000 to $F00000, the address specified in Ixx10 is a Turbo PMAC memory-I/O address, and Turbo PMAC will read the parallel word at that address. The least significant bit (count) is expected at bit 0 of the address. The bit width (8 to 48 bits), the format (signed or unsigned), and the register type (X or Y) are determined by Ixx95.

The common sources for this type of read are Acc-14 parallel I/O expansion boards, and the MLDT timer registers. The following tables show the settings of Ixx10 for these devices.

Ixx10 for PMAC2-Style MLDT Timer Registers (Ixx95=$180000)

Servo IC #	Chan. 1	Chan. 2	Chan. 3	Chan. 4	Notes
0	$078000	$078008	$078010	$078018	First IC on board PMAC2, 3U stack
1	$078100	$078108	$078010	$078018	Second IC on board PMAC2, 3U stack
2	$078200	$078208	$078210	$078218	First Acc-24E2x, first IC on first Acc-24P/V2
3	$078300	$078308	$078310	$078318	Second Acc-24E2x, second IC on first Acc-24P/V2
4	$079200	$079208	$079210	$079218	Third Acc-24E2x, first IC on second Acc-24P/V2
5	$079300	$079308	$079310	$079318	Fourth Acc-24E2x, second IC on second Acc-24P/V2
6	$07A200	$07A208	$07A210	$07A218	Fifth Acc-24E2x, first IC on third Acc-24P/V2
7	$07A300	$07A308	$07A310	$07A318	Sixth Acc-24E2x, second IC on third Acc-24P/V2
8	$07B200	$07B208	$07B210	$07B218	Seventh Acc-24E2x, first IC on fourth Acc-24P/V2
9	$07B300	$07B308	$07B310	$07B318	Eight Acc-24E2x, second IC on fourth Acc-24P/V2

It can also be used for registers in the 3U-format Acc-3E1 (for 3U Turbo Stack systems) and Acc-14E (for UMAC Turbo systems) boards. In this case, the last hex digit of Ixx91 must be set to a non-zero value to specify the byte-wide bus of these boards. The following tables show Ixx10 values for these boards.

MACRO Absolute Position Read: If Ixx95 contains a value from $720000 to $740000, or from $F20000 to $F40000, the value specified in Ixx10 is a MACRO node number, and Turbo PMAC will obtain the absolute power-on position through the MACRO ring. Ixx95 specifies what type of position data is used, and whether it is treated as a signed or unsigned value.

The MACRO node number is specified in the last two hex digits of Ixx10. The second-to-last digit specifies the MACRO IC number 0 to 3 (1, 2, and 3 exist only on Ultralite versions of the Turbo PMAC2, or a UMAC Turbo with Acc-5E). Note that the MACRO IC number on the Turbo PMAC does not necessarily match the ring master number for that IC, although it often will. The last digit specifies the MACRO node number 0 to 15 (0 to F hex) in that IC. This function is supported only in nodes 0, 1, 4, 5, 8, 9, 12 (C), and 13 (D).

The following table shows the required values of Ixx10 for all of the MACRO nodes that can be used. Note that MACRO IC 0 Node 0 uses an Ixx10 value of $000100, because Ixx10=0 disables the absolute position read function.

Ixx10 for MACRO Absolute Position Reads
(Ixx95=$720000 - $740000, $F20000 - $F40000)
Addresses are MACRO Node Numbers

MACRO Node Number	Ixx10 for MACRO IC 0	Ixx10 for MACRO IC 1	Ixx10 for MACRO IC 2	Ixx10 for MACRO IC 3
0	$000100	$000010	$000020	$000030
1	$000001	$000011	$000021	$000031
4	$000004	$000014	$000024	$000034
5	$000005	$000015	$000025	$000035
8	$000008	$000018	$000028	$000038
9	$000009	$000019	$000029	$000039
12	$00000C	$00001C	$00002C	$00003C
13	$00000D	$00001D	$00002D	$00003D

If obtaining the absolute position through a Delta Tau MACRO Station or equivalent, MACRO Station setup variable MI11x for the matching node must be set properly to obtain the type of information desired.

Ixx25, Ixx24: Flag Address and Mode

If the auxiliary functions for Node *n* of MACRO IC 0, 1, 2, or 3 have been enabled by setting Bit *n* of I70, I72, I74, or I76, respectively, to 1, the flag information in Register 3 for the node is copied automatically to and from PMAC RAM register $00347n, $00357n, $00367n, or $00377n, respectively. In this case, Ixx25 should specify the address of the RAM copy, not the actual MACRO interface register.

The following table lists the default values for Ixx25 on a Turbo PMAC2 Ultralite, which shows the address of the RAM copy register for each MACRO servo node:

Turbo PMAC2 Ultralite Ixx25 Defaults

Ixx25	Value	Register	Ixx25	Value	Register
I125	$003440	MACRO Flag Register Set 0	I1725	$003460	MACRO Flag Register Set 32
I225	$003441	MACRO Flag Register Set 1	I1825	$003461	MACRO Flag Register Set 33
I325	$003444	MACRO Flag Register Set 4	I1925	$003464	MACRO Flag Register Set 36
I425	$003445	MACRO Flag Register Set 5	I2025	$003465	MACRO Flag Register Set 37
I525	$003448	MACRO Flag Register Set 8	I2125	$003468	MACRO Flag Register Set 40
I625	$003449	MACRO Flag Register Set 9	I2225	$003469	MACRO Flag Register Set 41
I725	$00344C	MACRO Flag Register Set 12	I2325	$00346C	MACRO Flag Register Set 44
I825	$00344D	MACRO Flag Register Set 13	I2425	$00346D	MACRO Flag Register Set 45
I925	$003450	MACRO Flag Register Set 16	I2525	$003470	MACRO Flag Register Set 48
I1025	$003451	MACRO Flag Register Set 17	I2625	$003471	MACRO Flag Register Set 49
I1125	$003454	MACRO Flag Register Set 20	I2725	$003474	MACRO Flag Register Set 52
I1225	$003455	MACRO Flag Register Set 21	I2825	$003475	MACRO Flag Register Set 53
I1325	$003458	MACRO Flag Register Set 24	I2925	$003478	MACRO Flag Register Set 56
I1425	$003459	MACRO Flag Register Set 25	I3025	$003479	MACRO Flag Register Set 57
I1525	$00345C	MACRO Flag Register Set 28	I3125	$00347C	MACRO Flag Register Set 60
I1625	$00345D	MACRO Flag Register Set 29	I3225	$00347D	MACRO Flag Register Set 61

Ixx24 specifies how the address in Ixx25 is to be used. Bit 0 of Ixx24 must be set to 1 to specify PMAC2-style flag arrangements, which are used in the MACRO protocol. Bit 18 of Ixx24 must be set to 1 to specify that the flags are sent and received across MACRO. Bit 23 of Ixx24, which specifies the polarity of the amplifier/node fault bit into the Turbo PMAC2, must be set to match the polarity defined in the Station with the appropriate bit of MI18. If the bit n of MI18, and bit 23 of Ixx24 are set to 0, a low-true fault (logical 0 means fault, regardless of the input voltage) is specified. If the bit n of MI18, and bit 23 or Ixx24 are set to 1, a high-true fault (logical 1 means fault) is specified.

If no other bits of Ixx24 are set, the value of Ixx24 is $040001 or $840001. $040001 is the default value for Ixx24 on Turbo PMAC2 Ultralite boards. Refer to the detailed description of Ixx24 in the Turbo PMAC Software Reference for descriptions of the other bits.

When Bit 18 of Ixx24 is set to 1, and bit *n* of I1000 is set to 1, then the Motor xx flag information is automatically copied between the holding registers at $00344*n*, $00345*n*, $00346*n*, or $00347*n*, and the MACRO interface registers for node *n* of MACRO IC 0, 1, 2, or 3, respectively, on the Turbo PMAC2. The command flags, such as amplifier enable, are held in the Y-register of $0034x*n*. The feedback flags, such as overtravel limits and amplifier fault, are held in the X-registers of $0034x*n*. Monitoring of flag values should use these holding registers in RAM, not the actual MACRO node registers.

The following tables show the locations of the individual flags in these registers:

Motor Command Flags: Y:$0034*xn* for MACRO IC (*x*-4) Node *n*

Bit #	Function	Notes
0	Position Capture Prepare Flag	Must be set to 1 to prepare for hardware capture over ring; to 0 when done
1-7	(Not Used)	
8-10	(Reserved for future use)	
11	Position Capture Enable Flag	Must be set to 1 to prepare for hardware capture over ring; to 0 when done
12	Node Position Reset Flag	
13	(Reserved for future use)	
14	Amplifier Enabled	Command to Station
15-23	(Reserved for future use)	

Motor Status Flags: X:$0034*xn* for MACRO IC (*x*-4) Node *n*

Bit #	Function	Notes
0-7	(Not Used)	
8-10	(Reserved for future use)	
11	Position Captured Flag	Latched from selected flag
12	Power-On Reset or Node Reset Occurred	
13	Ring Break Detected Elsewhere	
14	Amplifier Enabled	Status from Station
15	Amplifier/Node Shutdown Fault	1 is treated as shutdown if Ix25 bit 23 = 1; 0 if Ix25 bit 23 = 0
16	Home Flag (HOME) Input Value	
17	Positive Limit Flag (PLIM) Value	
18	Negative Limit Flag (MLIM) Value	
19	User Flag (USER) Input Value	
20	Flag W Input Value	
21	Flag V Input Value	
22	Flag U Input Value	
23	Flag T Input Value	

Ixx70, Ixx71: Commutation Cycle Size

If the Turbo PMAC2 is performing commutation for Motor xx, providing either 2-phase current commands (sine-wave output) or 3-PWM phase voltage commands (direct PWM output), the size of the commutation cycle is equal to Ixx71/Ixx70, normally expressed in encoder counts. Because the MACRO station provides position feedback in units of 1/32 count for both servo and commutation, the value of Ixx70 and Ixx71 must be set to provide a ratio 32 times the number of true counts in the commutation cycle.

For example, if the commutation cycle has 1000 encoder counts, Ixx70 could be set to 1 and Ixx71 could be set to 32,000.

Ixx72: Commutation Phase Angle

Ixx72 controls the angular relationship between the phases of a multiphase motor. When Turbo PMAC is closing the current loop digitally for Motor xx, the proper setting of this variable is dependent on the polarity of the current measurements.

If the phase current sensors and ADCs in the amplifier are set up so that a positive PWM voltage command for a phase yields a negative current measurement value, Ixx72 must be set to a value less than 1024: 683 for a 3-phase motor, or 512 for a DC brush motor. If these are set up so that a positive PWM voltage command yields a positive current measurement value, Ixx72 must be set to a value greater than 1024: 1365 for a 3-phase motor, or 1536 for a DC brush motor. The testing described below shows how to determine the proper polarity.

The direct-PWM algorithms in the Turbo PMAC are optimized for 3-phase motors and will cause significant torque ripple when used with 2- or 4-phase motors. Delta Tau has created user-written phase algorithms for these motors; contact the factory if interested in obtaining these.

Note:

It is important to set the value of Ixx72 properly for the system. Otherwise, the current loop will have unstable positive feedback and want to saturate. This could cause damage to the motor, the drive, or both, if overcurrent shutdown features do not work properly. If unsure of the current measurement polarity in the drive, consult the Testing PWM and Current Feedback Operation section of this manual.

For commutation with digital current loops, the proper setting of Ixx72 is unrelated to the polarity of the encoder counter. This is different from commutation with an analog current loops (sine-wave control), in which the polarity of Ixx72 (less than or greater than 1024) must match the encoder counter polarity. With the digital current loop, the polarity of the encoder counter must be set for proper servo operation; with the analog current loop, once the Ixx72 polarity match has been made for commutation, the servo loop polarity match is guaranteed.

Ixx75: Absolute Phase Position Offset

If Ixx81 (see below) is set to a value greater than zero, then PMAC will read an absolute sensor for power-on phase position. In this case, it will use Ixx75 to determine the difference between the absolute sensor's zero position and the phase commutation cycle's zero position (unless Hall commutation sensors are used, in which case Ixx91 contains the initial offset information, which needs to be corrected later).

Normally, this position difference in Ixx75 is expressed in counts multiplied by Ixx70. However, when the absolute position is read from the position feedback register, as from a Yaskawa absolute encoder through an Acc-8D Option 9 and the MACRO Station, then Ixx75 is expressed in units of 1/32 of a count multiplied by Ixx70.

Ixx81: Motor xx Power-On Phase Position Address and Mode

Range: $000000 - $FFFFFF

Units: Turbo PMAC or multiplexer-port addresses

Default: 0

WARNING:

An unreliable phasing reference method can lead to a runaway condition. Test the phasing reference method carefully to make sure it works properly under all conceivable conditions. Make sure the Ixx11 fatal following error limit is active and as tight as possible so the motor will be killed quickly in the event of a serious phasing search error.

Ixx81 tells Turbo PMAC what address to read for absolute power-on phase-position information for Motor xx, if such information is present. This can be a different address from that of the ongoing phase position information, which is specified by Ixx83, but it must have the same resolution and direction sense. Ixx81 is set to zero if no special power-on phase position reading is desired, as is the case for an incremental encoder.

If Ixx81 is set to zero, a power-on phasing search routine is required for synchronous fixed-field brushless motors (permanent magnet, and switched reluctance); those that have a slip gain (Ixx78) of zero. Turbo PMAC's automatic phasing search routines based on Ixx73 and Ixx74 can be used, or a custom power-on PLC routine can be written.

Note:

Ixx81 is used for PMAC's commutation algorithms alone, to locate position within one electrical cycle of the motor. It is not used for any servo loop position information, even for power-up. Ixx10 and Ixx95 are used for that purpose.

Ixx91 tells how the data at the address specified by Ixx81 is to be interpreted. It also determines whether the location specified by Ixx81 is a multiplexer (thumbwheel) port address, an address in Turbo PMAC's own memory and I/O space or a MACRO node number.

Note:

It is easier to specify this parameter in hexadecimal form ($ prefix). If I9 is set to 2 or 3, the value of this variable will be reported back to the host in hexadecimal form.

Ixx81 for MACRO Absolute Position Reads using Geo MACRO Drive

Ixx81	Value	Register	Ixx81	Value	Register
I181	$003440	MACRO Flag Register Set 0	I1781	$003460	MACRO Flag Register Set 32
I281	$003441	MACRO Flag Register Set 1	I1881	$003461	MACRO Flag Register Set 33
I381	$003444	MACRO Flag Register Set 4	I1981	$003464	MACRO Flag Register Set 36
I481	$003445	MACRO Flag Register Set 5	I2081	$003465	MACRO Flag Register Set 37
I581	$003448	MACRO Flag Register Set 8	I2181	$003468	MACRO Flag Register Set 40
I681	$003449	MACRO Flag Register Set 9	I2281	$003469	MACRO Flag Register Set 41
I781	$00344C	MACRO Flag Register Set 12	I2381	$00346C	MACRO Flag Register Set 44
I881	$00344D	MACRO Flag Register Set 13	I2481	$00346D	MACRO Flag Register Set 45
I981	$003450	MACRO Flag Register Set 16	I2581	$003470	MACRO Flag Register Set 48
I1081	$003451	MACRO Flag Register Set 17	I2681	$003471	MACRO Flag Register Set 49
I1181	$003454	MACRO Flag Register Set 20	I2781	$003474	MACRO Flag Register Set 52
I1281	$003455	MACRO Flag Register Set 21	I2881	$003475	MACRO Flag Register Set 53
I1381	$003458	MACRO Flag Register Set 24	I2981	$003478	MACRO Flag Register Set 56
I1481	$003459	MACRO Flag Register Set 25	I3081	$003479	MACRO Flag Register Set 57
I1581	$00345C	MACRO Flag Register Set 28	I3181	$00347C	MACRO Flag Register Set 60
I1681	$00345D	MACRO Flag Register Set 29	I3281	$00347D	MACRO Flag Register Set 61

Ixx82: Current Loop Feedback Address

If the Turbo PMAC2 is being operated in direct PWM mode, Ixx82 must specify the address of the Phase B current feedback register. (If it is not being operated in direct PWM mode, Ixx82 must be set to 0.) When in direct PWM mode over MACRO, the Phase B current feedback value appears in the MACRO servo node's Register 2, so Ixx82 must contain the address of this register. The following table shows the typical values of Ixx82 in this mode, listing the address of Register 2 for each servo MACRO node.

Turbo PMAC2 Ultralite Ixx82 Typical Settings

Ixx82	Value	Register	Ixx82	Value	Register
I182	$078422	MACRO IC 0 Node 0 Reg. 2	I1782	$07A422	MACRO IC 2 Node 0 Reg. 2
I282	$078426	MACRO IC 0 Node 1 Reg. 2	I1882	$07A426	MACRO IC 2 Node 1 Reg. 2
I382	$07842A	MACRO IC 0 Node 4 Reg. 2	I1982	$07A42A	MACRO IC 2 Node 4 Reg. 2
I482	$07842E	MACRO IC 0 Node 5 Reg. 2	I2082	$07A42E	MACRO IC 2 Node 5 Reg. 2
I582	$078432	MACRO IC 0 Node 8 Reg. 2	I2182	$07A432	MACRO IC 2 Node 8 Reg. 2
I682	$078436	MACRO IC 0 Node 9 Reg. 2	I2282	$07A436	MACRO IC 2 Node 9 Reg. 2
I782	$07843A	MACRO IC 0 Node 12 Reg. 2	I2382	$07A43A	MACRO IC 2 Node 12 Reg. 2
I882	$07843E	MACRO IC 0 Node 13 Reg. 2	I2482	$07A43E	MACRO IC 2 Node 13 Reg. 2
I982	$079422	MACRO IC 1 Node 0 Reg. 2	I2582	$07B422	MACRO IC 3 Node 0 Reg. 2
I1082	$079426	MACRO IC 1 Node 1 Reg. 2	I2682	$07B426	MACRO IC 3 Node 1 Reg. 2
I1182	$07942A	MACRO IC 1 Node 4 Reg. 2	I2782	$07B42A	MACRO IC 3 Node 4 Reg. 2
I1282	$07942E	MACRO IC 1 Node 5 Reg. 2	I2882	$07B42E	MACRO IC 3 Node 5 Reg. 2
I1382	$079432	MACRO IC 1 Node 8 Reg. 2	I2982	$07B432	MACRO IC 3 Node 8 Reg. 2
I1482	$079436	MACRO IC 1 Node 9 Reg. 2	I3082	$07B436	MACRO IC 3 Node 9 Reg. 2
I1582	$07943A	MACRO IC 1 Node 12 Reg. 2	I3182	$07B43A	MACRO IC 3 Node 12 Reg. 2
I1682	$07943E	MACRO IC 1 Node 13 Reg. 2	I3282	$07B43E	MACRO IC 3 Node 13 Reg. 2

Ixx83: Commutation Feedback Address

If the Turbo PMAC2 is performing commutation for Motor xx (Ixx01 bit 0 = 1), providing either 2-phase current commands (sine-wave output) or 3-PWM phase voltage commands (direct PWM), Ixx83 must specify the address of the ongoing commutation position feedback.

When commutating over MACRO (Ixx01=3), the position feedback comes from Register 0 of the MACRO node. In this case, Ixx83 must contain the address of this MACRO node register. The following table contains the default Ixx83 values for Turbo PMAC2 Ultralite boards, listing the addresses of the position feedback registers for each MACRO servo node.

Turbo PMAC2 Ultralite Ixx83 Defaults

Ixx83	Value	Register	Ixx83	Value	Register
I183	$078420	MACRO IC 0 Node 0 Reg. 0	I1783	$07A420	MACRO IC 2 Node 0 Reg. 0
I283	$078424	MACRO IC 0 Node 1 Reg. 0	I1883	$07A424	MACRO IC 2 Node 1 Reg. 0
I383	$078428	MACRO IC 0 Node 4 Reg. 0	I1983	$07A428	MACRO IC 2 Node 4 Reg. 0
I483	$07842C	MACRO IC 0 Node 5 Reg. 0	I2083	$07A42C	MACRO IC 2 Node 5 Reg. 0
I583	$078430	MACRO IC 0 Node 8 Reg. 0	I2183	$07A430	MACRO IC 2 Node 8 Reg. 0
I683	$078434	MACRO IC 0 Node 9 Reg. 0	I2283	$07A434	MACRO IC 2 Node 9 Reg. 0
I783	$078438	MACRO IC 0 Node 12 Reg. 0	I2383	$07A438	MACRO IC 2 Node 12 Reg. 0
I883	$07843C	MACRO IC 0 Node 13 Reg. 0	I2483	$07A43C	MACRO IC 2 Node 13 Reg. 0
I983	$079420	MACRO IC 1 Node 0 Reg. 0	I2583	$07B420	MACRO IC 3 Node 0 Reg. 0
I1083	$079424	MACRO IC 1 Node 1 Reg. 0	I2683	$07B424	MACRO IC 3 Node 1 Reg. 0
I1183	$079428	MACRO IC 1 Node 4 Reg. 0	I2783	$07B428	MACRO IC 3 Node 4 Reg. 0
I1283	$07942C	MACRO IC 1 Node 5 Reg. 0	I2883	$07B42C	MACRO IC 3 Node 5 Reg. 0
I1383	$079430	MACRO IC 1 Node 8 Reg. 0	I2983	$07B430	MACRO IC 3 Node 8 Reg. 0
I1483	$079434	MACRO IC 1 Node 9 Reg. 0	I3083	$07B434	MACRO IC 3 Node 9 Reg. 0
I1583	$079438	MACRO IC 1 Node 12 Reg. 0	I3183	$07B438	MACRO IC 3 Node 12 Reg. 0
I1683	$07943C	MACRO IC 1 Node 13 Reg. 0	I3283	$07B43C	MACRO IC 3 Node 13 Reg. 0
Because these are all Y addresses, bit 1 of Ixx01 must be set to 1. With bit 0 of Ixx01 set to 1 to enable commutation, the net value of Ixx01 is 3.					

Ixx91: Motor xx Power-On Phase Position Format

Range: $000000 - $FFFFFF

Units: None

Default: 0

Ixx91 specifies how the power-on phase-position data, if any, for Motor xx is interpreted. Ixx81 specifies the address of the register containing this position data; Ixx91 controls how that data is read. This permits the use of a wide variety of absolute position sensors with the Turbo PMAC.

Ixx91 is used only on power-on/reset or on the **$*** or **$$*** on-line reset commands. To get a new value of Ixx91 to take effect, the **$*** or **$$*** command must be issued, or the value of Ixx91 must be stored to non-volatile flash memory with the **SAVE** command, and the board must be reset.

Ixx91 is a 24-bit value; currently only bits 16-23, which comprise the first two of six hex digits, are used. Ixx91 is only used if Ixx81 is set to a non-zero value.

The possible values of Ixx91 and the position sources they specify are summarized in the following table:

Ixx91 Value Range	Absolute Position Source	Ixx81 Address Type
$000000 - $070000	ACC-8D Opt 7 R/D Converter	Multiplexer Port
$080000 - $180000	Parallel Data Y-Register	Turbo PMAC Memory-I/O
$480000 - $580000	Parallel Data X-Register	Turbo PMAC Memory-I/O
$730000	MACRO Station R/D Converter	MACRO Node Number
$740000	MACRO Station Parallel Read	MACRO Node Number
$800000 - $FF0000	Hall Sensor Read	Turbo PMAC Memory-I/O

Parallel Data Read: If Ixx91 contains a value from $08000n to $18000n, or from $48000n to $58000n, Motor xx will do a parallel data read of the Turbo PMAC memory or I/O register at the address specified by Ixx81.

In this mode, bits 16 to 21 specify the number of bits to be read. If the last hex digit of Ixx91 is 0, consecutive bits will be read from the address specified by Ixx81, with the least significant bit read from bit 0. This format is used for registers and I/O devices with 24-bit interfaces.

If the last hex digit of Ixx91 is 4, 5, or 6, data will be read in byte-wide pieces, with the least significant byte at the address specified in Ixx81, the next byte at one address higher, and the next byte (if used) at one more address higher. This format is intended for getting parallel data from the Acc-3E 3U-format stack I/O board or the Acc-14E 3U-format pack (UMAC) I/O board, which have byte-wide interfaces. For this format, the last hex digit of Ixx91 determines which byte of the 24-bit word is used, according to the following table:

Ixx91 Last Digit	Byte	Bits
4	Low	0 – 7
5	Middle	8 – 15
6	High	16 – 23

In this mode, bit 22 of Ixx91 specifies whether a Y-register is to be read, or an X-register. A value of 0 in this bit, yielding Ixx91 values from $080000 to $180000, specifies a Y-register; a value of 1, yielding Ixx91 values from $480000 to $580000, specifies an X-register.

For the Acc-8D Option 9 Yaskawa Absolute Encoder Converter, Turbo PMAC's 24-bit encoder phase position register, an X-register, is read, so Ixx91 is set to $580000 ($180000 + $400000).

For the Acc-49 Sanyo Absolute Encoder Converter, the encoder provides a 13-bit value within one motor revolution, and the data is read from a Y-register, so Ixx91 is set to $0D0000.

Example 1: If Ixx81=$078D01 and Ixx91=$140000, Turbo PMAC would read 20 bits (bits 0 – 19) from Y:$078D01.

Example 2: If Ixx81=$078C00 and Ixx91=$100004, Turbo PMAC would read 16 bits, with the low eight bits from the low byte of Y:$078C00, and the high eight bits from the low byte of Y:$078C01.

Example 3: If Ixx81=$079E03 and Ixx91=$120005, Turbo PMAC would read 18 bits, with the low eight bits from the middle byte of Y:$079E03, and the next eight bits from the middle byte of Y:$079E04, and the high two bits from the first two bits of the middle byte of Y:$079E05.

MACRO R/D Read: If Ixx91 contains a value of $730000, Motor xx will read the absolute phase position from an Acc-8D Option 7 Resolver-to-Digital Converter through a MACRO Station or compatible device.

In this mode, Ixx81 specifies the MACRO node number. MACRO Station setup variable MI11x for the matching node must be set to read the R/D converter.

MACRO Parallel Read: If Ixx91 contains a value of $740000, Motor xx will read the absolute phase position from a parallel data source through a MACRO Station or compatible device.

In this mode, Ixx81 specifies the MACRO node number. MACRO Station setup variable MI11x for the matching node must be set to read the parallel data source.

Hall Sensor Read: If Ixx91 contains a value from $800000 to $FF0000 (bit 23 set to 1), Motor xx will read bits 20 through 22 of the Turbo PMAC memory or I/O register at the address specified by Ixx81. It will expect these three bits to be encoded as the U, V, and W Hall Effect commutation signals with 120°e spacing for the absolute power-on phase position. Usually in this mode, the address specified in Ixx81 is that of a flag register.

Note:

Hall-style commutation sensors give only an approximate phase position, with a +/-30°e error. Generally, it is necessary to correct the phase position value at a known position such as the encoder's index pulse, either using the **SETPHASE** command or by writing directly into the phase position register (suggested M-variable Mxx71).

If the flag register is in a PMAC-style Servo IC, the flag inputs for bits 20, 21, and 22, representing W, V, and U, are +LIMn, -LIMn, and HMFLn, respectively. In a typical application, Ixx81 specifies that these inputs be used from the spare flag register matching the second DAC channel used for commutation.

If the flag register is in a PMAC2-style Servo IC, the input flags for bits 20, 21, and 22, representing W, V, and U, are CHWn, CHVn, and CHUn, respectively. In a typical application, these inputs are used from the same flag register addressed by Ixx25 for the main flags.

In this mode, bit 22 of Ixx91 allows for reversal of the sense of the hall-effect sensors. If W (bit 20 of the register; HMFLn or CHWn) leads V (bit 21; -LIMn or CHVn), and V leads U (bit 22; +LIMn or CHUn) as the commutation cycle counts up, then bit 22 of Ixx91 should be set to 0. If U leads V and V leads W as the commutation cycle counts up, then bit 22 of Ixx91 should be set to 1.

In this mode, bits 16 to 21 of Ixx91 together form an offset value from 0 to 63 representing the difference between PMAC's commutation cycle zero and the hall-effect sensor zero position, which is defined as the transition of the V signal when U is low. This offset has units of 1/64 of a commutation cycle, or 5.625°e. Typically, one of the transitions will be at PMAC's commutation zero point, so the desired offset values will be 0°, 60°, 120°, 180°, 240°, and 300°, approximated by values of 0, 11($0B), 21($15), 32($20), 43($2B), and 53($35).

This operation can handle hall-effect sensors separated by 120°e. The following table gives the Ixx91 settings for bits 16 to 23 for all of the common cases of hall-effect settings as they relate to the PMAC commutation cycle.

Ixx91 Values for UVW Hall States (120°e Spacing)

0 to 60 deg	60 to 120deg	120 to 180 deg	180 to -120 deg	-120 to -60 deg	-60 to 0 deg	Ixx91
011	010	110	100	101	001	$800000
001	011	010	110	100	101	$8B0000
101	001	011	010	110	100	$950000
100	101	001	011	010	110	$A00000
110	100	101	001	011	010	$AB0000
010	110	100	101	001	011	$B50000
001	101	100	110	010	011	$C00000
011	001	101	100	110	010	$CB0000
010	011	001	101	100	110	$D50000
110	010	011	001	101	100	$E00000
100	110	010	011	001	101	$EB0000
101	100	110	010	011	001	$F50000

The following table shows the values of Ixx81 used here.

Turbo PMAC2 Ixx81 Typical Hall Phasing Settings
(Ix91=$800000 - $FF0000)

Servo IC #	Chan. 1	Chan. 2	Chan. 3	Chan. 4	Notes
0	$078000	$078008	$078010	$078018	First IC on board PMAC2, 3U stack
1	$078100	$078108	$078010	$078018	Second IC on board PMAC2, 3U stack
2	$078200	$078208	$078210	$078218	First Acc-24E2x, first IC on first Acc-24P/V2
3	$078300	$078308	$078310	$078318	Second Acc-24E2x, second IC on first Acc-24P/V2
4	$079200	$079208	$079210	$079218	Third Acc-24E2x, first IC on second Acc-24P/V2
5	$079300	$079308	$079310	$079318	Fourth Acc-24E2x, second IC on second Acc-24P/V2
6	$07A200	$07A208	$07A210	$07A218	Fifth Acc-24E2x, first IC on third Acc-24P/V2
7	$07A300	$07A308	$07A310	$07A318	Sixth Acc-24E2x, second IC on third Acc-24P/V2
8	$07B200	$07B208	$07B210	$07B218	Seventh Acc-24E2x, first IC on fourth Acc-24P/V2
9	$07B300	$07B308	$07B310	$07B318	Eighth Acc-24E2x, second IC on fourth Acc-24P/V2

If the flag register is obtained through the MACRO ring, Ixx81 will contain the address of a MACRO auxiliary image register in RAM. The following table shows the typical values of Ixx81 used here.

Turbo PMAC2 Ultralite Ixx81 Typical Hall Phasing Settings
(Ixx91=$800000 - $FF0000)

Ixx81	Value	Register	Ixx81	Value	Register
I181	$003440	MACRO Flag Register Set 0	I1781	$003460	MACRO Flag Register Set 32
I281	$003441	MACRO Flag Register Set 1	I1881	$003461	MACRO Flag Register Set 33
I381	$003444	MACRO Flag Register Set 4	I1981	$003464	MACRO Flag Register Set 36
I481	$003445	MACRO Flag Register Set 5	I2081	$003465	MACRO Flag Register Set 37
I581	$003448	MACRO Flag Register Set 8	I2181	$003468	MACRO Flag Register Set 40
I681	$003449	MACRO Flag Register Set 9	I2281	$003469	MACRO Flag Register Set 41
I781	$00344C	MACRO Flag Register Set 12	I2381	$00346C	MACRO Flag Register Set 44
I881	$00344D	MACRO Flag Register Set 13	I2481	$00346D	MACRO Flag Register Set 45
I981	$003450	MACRO Flag Register Set 16	I2581	$003470	MACRO Flag Register Set 48
I1081	$003451	MACRO Flag Register Set 17	I2681	$003471	MACRO Flag Register Set 49
I1181	$003454	MACRO Flag Register Set 20	I2781	$003474	MACRO Flag Register Set 52
I1281	$003455	MACRO Flag Register Set 21	I2881	$003475	MACRO Flag Register Set 53
I1381	$003458	MACRO Flag Register Set 24	I2981	$003478	MACRO Flag Register Set 56
I1481	$003459	MACRO Flag Register Set 25	I3081	$003479	MACRO Flag Register Set 57
I1581	$00345C	MACRO Flag Register Set 28	I3181	$00347C	MACRO Flag Register Set 60
I1681	$00345D	MACRO Flag Register Set 29	I3281	$00347D	MACRO Flag Register Set 61

Because phase position needs only to be known within a single revolution, any geared-down secondary absolute sensors are not relevant for this purpose. They may still be used for power-on position information for the servo loop, with Ixx10, Ixx99, and Ixx98

In general, the zero position of the absolute sensor will not be the same as the zero position of the commutation cycle. Parameter Ixx75 is used to hold the offset between these two reference positions.

Ixx95: Motor xx Power-On Servo Position Format

Range: $000000 - $FFFFFF

Units: none

Default: $000000

Ixx95 specifies how the absolute power-on servo-position data, if any, for Motor xx is interpreted. Ixx10 specifies the address of the register containing this position data; Ixx95 controls how that data is read. This permits the use of a wide variety of absolute position sensors with the Turbo PMAC.

Ixx95 is used only on power-on/reset or on the **$*** or **$$*** command. To get a new value of Ixx95 to take effect, either the **$*** or **$$*** command must be issued, or the value must be stored to non-volatile flash memory with the **SAVE** command, and the board must be reset.

Ixx95 is a 24-bit value; currently bits 16-23, which comprise the first two of six hex digits, are used. Ixx95 is only used if Ixx10 is set to a non-zero value.

The possible values of Ixx95 and the absolute position feedback devices they reference are summarized in the following table:

Ixx95 Value Range	Absolute Position Source	Ixx10 Address Type	Format
$000000 - $070000	ACC-8D Opt 7 R/D Converter	Multiplexer Port	Unsigned
$080000 - $300000	Parallel Data Y-Register	Turbo PMAC Memory-I/O	Unsigned
$310000	ACC-28 A/D Converter	Turbo PMAC Memory-I/O	Unsigned
$320000	ACC-49 Sanyo Abs. Encoder	Turbo PMAC Memory-I/O	Unsigned
$480000 - $700000	Parallel Data X-Register	Turbo PMAC Memory-I/O	Unsigned
$710000	ACC-8D Opt 9 Yaskawa Abs. Enc.	Multiplexer Port	Unsigned
$720000	MACRO Station Yaskawa Abs. Enc.	MACRO Node Number	Unsigned
$730000	MACRO Station R/D Converter	MACRO Node Number	Unsigned
$740000	MACRO Station Parallel Read	MACRO Node Number	Unsigned
$800000 - $870000	Acc-8D Opt 7 R/D Converter	Multiplexer Port	Signed
$880000 - $B00000	Parallel Data Y-Register	Turbo PMAC Memory-I/O	Signed
$B10000	ACC-28 A/D Converter	Turbo PMAC Memory-I/O	Signed
$B20000	ACC-49 Sanyo Abs. Encoder	Turbo PMAC Memory-I/O	Signed
$C80000 - $F00000	Parallel Data X-Register	Turbo PMAC Memory-I/O	Signed
$F10000	ACC-8D Opt 9 Yaskawa Abs. Enc.	Multiplexer Port	Signed
$F20000	MACRO Station Yaskawa Abs. Enc.	MACRO Node Number	Signed
$F30000	MACRO Station R/D Converter	MACRO Node Number	Signed
$F40000	MACRO Station Parallel Read	MACRO Node Number	Signed

The following section provides details for Geo Macro Drive:

Parallel Data Read: If Ixx95 contains a value from $080000 to $300000, from $480000 to $700000, from $880000 to $B00000, or from $C80000 to $F00000, Motor xx will do a parallel data read of the Turbo PMAC memory or I/O register at the address specified by Ixx10. It expects to find the least significant bit of the feedback in Bit 0 of this register.

In this mode, bits 16 to 21 specify the number of bits to be read. If the last hex digit of Ixx95 is 0, consecutive bits will be read from the address specified by Ixx81, with the least significant bit read from bit 0. If the number of bits is greater than 24, the high bits are read from the register at the next higher-numbered address. This format is used for registers and I/O devices with 24-bit interfaces.

If the last hex digit of Ixx95 is 4, 5, or 6, data will be read in byte-wide pieces, with the least significant byte at the address specified in Ixx81, the next byte at one address higher, and so on, up to a possible 6 consecutive addresses. This format is intended for getting parallel data from the Acc-3E 3U-format stack I/O board or the Acc-14E 3U-format pack (UMAC) I/O board, which have byte-wide interfaces. For this format, the last hex digit of Ixx95 determines which byte of the 24-bit word is used, according to the following table:

Ixx95 Last Digit	Byte	Bits
4	Low	0 – 7
5	Middle	8 – 15
6	High	16 – 23

In this mode, bits 16 to 21 of Ixx95 specify the number of bits to be read, starting with bit 0 at the specified address. In this mode, they can take a value from $08 to $30 (8 to 48). If the number of bits is greater than 24, the high bits are read from the register at the next higher-numbered address.

In this mode, bit 22 of Ixx95 specifies whether a Y-register is to be read, or an X-register. A value of 0 in this bit specifies a Y-register; a value of 1 specifies an X-register. Almost all-common sources of absolute position information are located in Y-registers, so this digit is usually 0.

In this mode, bit 23 of Ixx95 specifies whether the position is interpreted as an unsigned or a signed value. If the bit is set to 0, it is interpreted as an unsigned value, if the bit is 1, it is interpreted as a signed value.

Combining these components, Ixx95 values in this mode can be summarized as:

$08000n - $30000n:	Parallel Y-register read, unsigned value, 8 to 48 bits
$48000n - $70000n:	Parallel X-register read, unsigned value, 8 to 48 bits
$88000n - $B0000n:	Parallel Y-register read, signed value, 8 to 48 bits
$C8000n - $F0000n:	Parallel X-register read, signed value, 8 to 48 bits

Example 1: If Ixx10=$078D00 and Ixx95=$200000, Turbo PMAC would read 32 bits, the low 24 bits from Y:$078D00, and the high eight bits from the low eight bits of Y:$078D01.

Example 2: If Ixx10=$078C00 and Ixx95=$100004, Turbo PMAC would read 16 bits, with the low eight bits from the low byte of Y:$078C00, and the high eight bits from the low byte of Y:$078C01.

Example 3: If Ixx10=$079E03 and Ixx95=$120005, Turbo PMAC would read 18 bits, with the low eight bits from the middle byte of Y:$079E03, and the next eight bits from the middle byte of Y:$079E04, and the high two bits from the first two bits of the middle byte of Y:$079E05.

Geo MACRO Drive Example for Absolute Position Data

If there are two Geo MACRO drives, the first one has two axis and axis 2 uses Resolver. The other Geo MACRO drive has only one axis, quadrature encoder feedback.

```
I210=$3508
I295=$5B0000                    ; Turbo PMAC would read 19 bits X-register
```

Turbo Ultralite ECT

```
I8000=$2F8420                    ; $3501
I8001=$18000                     ; $3502
I8002=$2F8424                    ; $3503  Resolver
I8003=$18000                     ; $3504
I8004=$2F8428                    ; $3505
I8005=$18000                     ; $3506
I8006=$603503                    ; $3507 Read Y/X word-parallel, no filtering
                                 ; (2 line entry)
I8007=$01301D                    ; $3508 Uses 19 bits ($013) parallel data,
                                 ; shifted by 5-bits ($01D)

MS0,MI101=0                      ;Geo1-ch1 quadrature
MS1,MI102=5                      ;Geo1-ch2 resolver
MS4,MI101=0                      ;Geo2-ch1 quadrature
```

Ixx97 Motor xx Position Capture and Trigger Mode

Range: 0 - 3

Units: none

Default: 0

Ixx97 controls the triggering function and the position capture function for triggered moves on Motor xx. These triggered moves include homing search moves, on-line jog-until-trigger moves, and motion program **RAPID**-mode move-until-trigger. Ixx97 is a 2-bit value: bit 0 controls the how the capture of the trigger position is done (the post-trigger move is relative to the trigger position), and bit 1 specifies what the trigger condition is.

Hardware Capture: If Ixx97 is set to 0 or 2 (bit 0 = 0), Turbo PMAC will use the hardware-captured position in the Servo IC as the trigger position. This is the "flag-capture" register associated with the flag set used for the motor, as specified for Ixx25. In order for this to work properly, the position-loop

feedback for Motor xx, as specified by Ixx03, and the conversion table, must be received through the encoder counter of the same hardware interface channel as used for the flag set (e.g. if flag set 2 is used, encoder 2 must be used for position-loop feedback). The advantage of the hardware position capture is that it is immediate, and accurate to the exact count at any speed.

Software Capture: If Ixx97 is set to 1 or 3 (bit 0 = 1), Turbo PMAC will use a software-captured position for the trigger position. In this case, Turbo PMAC uses the register whose address is specified by Ixx03, usually a register in the encoder conversion table, for the trigger position. The advantage of software capture is that it can be used with any type of feedback, or when the position encoder channel is not the same as the flag channel. The disadvantage is that the software capture can have up to 1 background cycle delay (typically 2-3 msec), which limits the accuracy of the capture.

Input Trigger: If Ixx97 is set to 0 or 1, (bit 1 = 0), Turbo PMAC will use the input capture trigger flag in the Servo IC flag register addressed by Ixx25 as the trigger for the move. This input trigger is created by an edge of the index input and a flag input for the channel as specified by I6mn2 and I6mn3 for the selected Channel n of Servo IC m, or if a MACRO flag register is selected by Ixx25, with bit 18 of Ixx25 set to 1, the input trigger condition is set by MI-variables on the MACRO station.

Error Trigger: If Ixx97 is set to 2 or 3, (bit 1 = 1), Turbo PMAC will use the "warning following error" status bit in the motor status word as the trigger for the move. When this bit changes from 0 to 1 because the magnitude of the following error for the motor has exceeded the warning limit in Ixx11, Turbo PMAC will consider this the trigger condition for the triggered move. Because there is nothing in this mode that can create a hardware capture, only software capture should be used with error trigger (Ixx97 = 3).

Summarizing the values of Ixx97, and their effect:

- Ixx97 = 0: Input trigger, hardware position capture
- Ixx97 = 1: Input trigger, software position capture
- Ixx97 = 2: Error trigger, hardware position capture (not useful!)
- Ixx97 = 3: Error trigger, software position capture

GEO MACRO DRIVE MI-VARIABLE REFERENCE

The Geo MACRO Station is set up through its own set of initialization I-variables, which are distinct from the I-variables on PMAC. Usually, they are referenced as MI-variables (e.g. MI900) to distinguish them from the PMAC's own I-variables, although they can be referenced just as I-variables.

These MI-variables can be accessed from the Turbo PMAC2 Ultralite/UMAC MACRO through the on-line **MS{node#},MI{variable#}** read and **MS{node#},MI{variable#}={constant}** write commands, or the **MSR{node#},MI{variable#},{PMAC variable}** read-copy and **MSW{node#},MI{variable#},{PMAC variable}** write-copy commands (either on-line or background PLC), where **{node#}** specifies the MACRO node number (0 to 15), **{variable#}** specifies the number of the Station MI-variable (0 - 999), {constant} represents the numerical value to be written to the Station MI-variable, or **{PMAC variable}** specifies the value to be copied to or from the Station MI-variable.

For most Station MI-variables, the **{node#}** specifier can take the number of any active node on the station (usually the lowest-numbered active node). These variables have **MS{node}** in the header of their descriptions below.

However, there are several node-specific MI-variables. These variables are in the range MI910 to MI939. For these variables, the node specifier must contain the specific node number for the MACRO node they affect. These variables have **MS{node}** in the header of their descriptions below.

Global MI-Variables

MS{node},MI0 Geo MACRO drive Firmware Version (Read Only)

Range: 1.000 - 9.999

Units: Revision numbers

This variable when queried, reports the revision number of the firmware installed in the Geo MACRO drive

Example:

```
MS0,MI0
1.006
```

MS{node},MI1 Geo MACRO drive Firmware Date (Read Only)

Range: 01/01/00 – 12/31/99

Units: MM/DD/YY

This variable, when queried, reports the date of implementation of the firmware on the Geo MACRO drive. The date is reported in the North American style of month/day/year with two decimal digits for each.

The PMAC command MSDATE, which polls this value, turns the year into a 4-digit value before reporting the value to the host computer.

MS{node},MI2 and MI3 (Reserved for future use)

Range: 0

Units: none

Default: 0

MS{node},MI4 Geo MACRO drive Status Word (Read Only)

Range: $00000000 - $FFFFFFFF

Units: Bits

This variable, when queried, reports the value of the current status word bits for the Geo MACRO Station. The value reported should be broken into bits. Each bit reports the presence or absence of a particular fault on the Station. If the bit is 0, the fault has not occurred since Station faults were last cleared. If the bit is 1, the fault has occurred since Station faults were last cleared.

Bit #	Fault	Notes
0	MTR 1 Over Current	Motor #1 Over current, display "E2" or "AE2"
1	MTR 2 Over Current	Motor #2 Over current, display "E7" or "AE7"
2	MTR 1 Output Short Circuit	Motor #1 Short Circuit, display "E3" or "AE3"
3	MTR 2 Output Short Circuit	Motor #2 Short Circuit, display "E8" or "AE8"
4	MTR 1 Over Temperature	Motor #1 Over Temperature, display "E5" or "AE5"
5	MTR 2 Over Temperature	Motor #2 Over Temperature, display "EA" or "AEA"
6	MTR 1 IGBT Over Temperature	IGBT #1 Over Temperature, display "E4" or "AE4"
7	MTR 2 IGBT Over Temperature	IGBT #2 Over Temperature, display "E9" or "AE9"
8	Encoder 1 Loss	Encoder #1 Loss, display "Eh" or "AEh", check MS{node},MI100 and MS{node},MI107
9	Encoder 2 Loss	Encoder #2 Loss, display "EH" or "AEH" check MS{node},MI100 and MS{node},I108
10-16	(Reserved for future use)	
17	Ring Fault – Taxi Error	Global Fault, Ring Break, display "b"
18	Ring Fault – Synch Packet	Global Fault, Node 15 Synch Packet Fault determined by MI10 , display "C"
19	Ring Fault – Ring Errors	Global Fault, Exceeded Ring Error in MI9, display "d"
20	Bus Under Voltage Fault	Global Fault, display "EC" or "AEC"
21	Bus Over Voltage Fault	Global Fault, display "EB" or "AEB"
22	De-saturated Shunt Fault	Global Fault, display "ED" or "AED"
23	DC to DC Power Supply Fault	Global Fault, display "EF" or "AEF"

Any of the fault bits that are set can be cleared with the **`MSCLRF{node}`** (clear fault) command, or the **`MS$$${node}`** (Station reset) command.

Also look **MI6**

MS{node},MI5 Ring Error Counter

Range: $000000 - $FFFFFF

Units: Error Count

This variable, when queried, reports the number of ring communications errors detected by the Geo MACRO Station since the most recent power-up/reset.

MS{node},MI6 Status Word Control

Range: 0 – $F

Units: none

Default: 1

MI6 controls what information is returned when the Geo MACRO drive status word (MI4) is queried with

	Value	Function
MS{node},MI6	0	Ring Status Word
MS{node},MI6	1	Bus Voltage value

MS{node},MI7 Geo MACRO Error Counter

Range: $000000 - $FFFFFF

Units: Error Count

This variable, when queried, reports the total number of any errors detected by the Geo MACRO Station since the most recent power-up/reset (MS$$${node}) or value reset by the user, at any time.

MS{node},MI8 Geo MACRO Ring Check Period

Range: 0 - 255

Units: Station phase cycles

Default: 2

MI8 determines the period, in phase cycles, for the Geo MACRO Station to evaluate whether there has been a Geo MACRO ring failure or not. Every phase cycle, the Station checks the ring communications status. In MI8 phase cycles (or Geo MACRO ring cycles), the Station must receive at least MI10 "sync packets" and detect fewer than MI9 ring communications errors, to conclude that the ring is operating correctly. Otherwise, it will conclude that the ring is not operating properly, set its servo command output values to zero, set its amplifier enable outputs to the "disable" state, and force all of its digital outputs to their "shutdown" state as defined by MS{node},MI13, and report a ring fault.

If MI8 is set to 0 at power-on/reset, the Geo MACRO Station will automatically set it to 8.

MS{node},MI9 Geo MACRO Ring Error Shutdown Count

Range: 0 - 255

Units: none

Default: 2

MI9 determines the number of Geo MACRO communications errors detected that will cause a shutdown fault of the Geo MACRO Station. If the Station detects MI9 or greater Geo MACRO communications errors in MI8 phase (Geo MACRO Ring) cycles, it will shut down on a Geo MACRO communications fault, turning off all outputs.

The Station can detect one ring communications error per phase cycle (even if more than one error has occurred). Setting MI9 greater than MI8 means that the Station will never shut down for ring communications error.

The Station can detect four types of communications errors: byte "violation" errors, packet checksum errors, packet overrun errors, and packet under run errors. If MI9 errors have occurred in the MI8 check period, and at least half of these errors are byte "violation" errors, the Station will conclude that there is a ring break immediately upstream of it (if there are no ring input communications to the Station, there will be continual byte violation errors). In this case, not only will it set its servo command output values to zero, set its amplifier enable outputs to the "disable" state, and force all of its digital outputs to their "shutdown" state as defined by MS{node},MI13, but it will also turn itself into a master so it can report to other devices downstream on the ring.

If MI9 is set to 0 at power-on/reset, the Geo MACRO Station will automatically set it to 4.

MS{node},MI10 Geo MACRO Sync Packet Shutdown Count

Range: 0 – 65,535

Units: none

Default: 8

MI10 determines the number of Geo MACRO Ring "sync packets" that must be received during a check period for the Station to consider the ring to be working properly. If the Station detects fewer than MI10 sync packets in MI8 phase (Geo MACRO Ring) cycles, it will shut down on a Geo MACRO communications fault, setting its servo command output values to zero, setting its amplifier enable outputs to the "disable" state, and forcing all of its digital outputs to their "shutdown" state as defined by MS{node},MI13.

The node number (0-15) of the sync packet is determined by bits 16-19 of Station variable MI996. On the Geo MACRO Station, this is always node 15 ($F), because this node is always active for Geo MACRO Type 1 auxiliary communications.

The Station checks each phase cycle to see if a sync packet has been received or not. Setting MI10 to 0 means the Station will never shut down for lack of sync packets. Setting MI10 greater than MI8 means that the Station will always shut down for lack of sync packets.

If MI10 is set to 0 at power-on/reset, the Geo MACRO Station will automatically set it to 4.

MS{node},MI11 Station Order Number

Range: 0 – 254

Units: none

Default: 0

MI11 contains the "station-order" number of the Geo MACRO Station on the ring. This permits it to respond to auxiliary MACROSTASCIIn commands from a Turbo PMAC ring controller, regardless of the Geo MACRO Station's binding to a MACRO Master.

The station ordering scheme permits the ring controller to isolate each master or slave station on the ring in sequence and communicate with it, without knowing in advance how the ring is configured or whether there are any conflicts in the regular addressing scheme. This is very useful for the initial setup and debugging of the ring configuration.

Normally, station order numbers of devices on the ring are assigned in numerical order, with the station downstream of the ring controller getting station-order number 1. This does not have to be the case, however.

"Unordered" stations have the station-order number 0. When the ring controller executes a

MACROSTASCII255 command, the first "unordered" station in the ring will respond.

MI11 can also be set with the ASCII command **`STN={constant}`**. The value of MI11 can also be queried with the ASCII command **`STN`**.

MS{node},MI12 Card Identification (Read Only)

Range: 0 – $FFFFFF

Units: none

Default: $93596 (603542)

This returns the card part number. The same as the CID ASCII command.

MS{node},MI13 Ring Break Output indicator

Range: **0 – $F**

Units: **none**

Default: **0**

In case of a ring break error, MI13 controls the Geo MACRO output lines and only as a safety feature. Choose what the output state would be in a ring break situation, High (12-24V) or Low (GND) for each individual output, depending on sinking or sourcing setup. Default MI13 equals 0, so in case of ring break, all outputs are turned off.

Output n is enabled (True)	**MS{node},MI13 - Bit**	**Value**	**Output In Case Of Ring Break Error**	
			GP OUT n COL*	GP OUT n EMT**
Output 1	1	0	12-24V	0V
		1	0V	12-24V
Output 2	2	0	12-24V	0V
		1	0V	12-24V
Output 3	3	0	12-24V	0V
		1	0V	12-24V
Output 4	4	0	12-24V	0V
		1	0V	12-24V
*COM EMT (pin10) is wired to GND and pin 9 (COM COL) is let floating **COM COL (pin 9) is wired to 12-24V and pin 10 (COM EMT) is let floating				

Note:

MS{node},MI13 was added in Geo MACRO firmware versions 1.005 and above.

MS{node},MI100 Motor Activation Control word

Range: 0 – $F

Units: none

Default: 0

MI100 controls which axis functions are enabled on the Geo MACRO drive.

If bit 0 (value of 1) is set to 1, this would indicate that the user wants to use only one motor node with his Geo MACRO drive. This is always the case with **single axis** Geo MACRO Drives. If bit 0 is set to 0, then both nodes are enabled (default).

Bit 1 is reserved for future use

If bit 2 (value of 4) is set to 1,then Motor #1 over-temperature function is enabled and Geo MACRO Drive expects the Motor #1 Over-temperature input to be wired into pin 23 of the X1. If the over temperature for motor #1 is triggered then the seven segment display will show the fault code "E5" or "AE5" if in ASCII mode. If bit 2 is set to 0, Motor #1 over-temperature function is disabled (default).

If bit 3 (value of 8) is set to 1, then Motor #2 over-temperature function is enabled and Geo MACRO Drive expects the Motor #2 Over-temperature input to be wired into pin 23 of the X2. If the over temperature for motor #2 is triggered then the seven segment display will show the fault code "EA" or "AEA" if in ASCII mode. If bit 3 is set to 0, Motor #2 over-temperature function is disabled.

This MI-variable is used at power-up/reset only, so to change its value and have the change take effect, the user will change the value, issue an "MSSAVEn" command, and reset the Geo MACRO drive ("MS$$$n" / power cycle).

For example, if we have a single axis Geo MACRO drive and we do not want to waste a motor node and we want to have the Motor#1 over-temperature input enabled, then MS{node}, MI100=5

Note:

MS{node},MI100 was added in Geo MACRO firmware versions 1.006 and above.

MS{node},MI101-102 Primary Feedback Selection

MI101 determines what feedback device is used for primary feedback for Axis 1 on the Geo MACRO drive. It defines what feedback register is copied into Feedback Register 0 for the main servo node for the axis. MI102 performs the same function for Axis 2, if present and activated.

The following table shows the possible values for MI101 and MI102 and the feedback devices they select for feedback.

Encoder #1	Encoder #2	Value	Decode Function
MS{node},MI101	MS{node},MI102	0	Quadrature Encoder, Normal Shifting (1/T) (5-bits)
MS{node},MI101	MS{node},MI102	1	Quadrature Encoder, No shifting
MS{node},MI101	MS{node},MI102	2	SSI encoder, CW
MS{node},MI101	MS{node},MI102	3	SSI encoder, CCW
MS{node},MI101	MS{node},MI102	4	Resolver CW
MS{node},MI101	MS{node},MI102	5	Resolver CCW
MS{node},MI101	MS{node},MI102	6	Sinusoidal Encoder x4096
MS{node},MI101	MS{node},MI102	12	Write the arctangent value of the Sin and Cos to the MACRO IO node (Resolver CCW +8)

MS{node},MI101	MS{node},MI102	13	Write the arctangent value of the Sin and Cos to the MACRO IO node (Resolver CW +8)
MS{node},MI101	MS{node},MI102	14	Write the Sin and Cos values to the MACRO IO node (Sin enc.) For troubleshooting

Check in the manual section "Setting up Encoders" for more details.

MS{node},MI103 Sin Encoder/ Resolver #1 bias

Range: -32768 - 32767

Units: bits

Default: 0

This variable sets the value of the bias that is added to the Sine ADC reading for the first channel before arctangent calculations are done to calculate position. It is generally set to the negative average of the maximum and minimum ADC readings across the cycle.

MS{node},MI104 Sin Encoder/ Resolver #2 bias

Range: -32768 - 32767

Units: bits

Default: 0

This variable sets the value of the bias that is added to the Sine ADC reading for the second channel before arctangent calculations are done to calculate position. It is generally set to the negative average of the maximum and minimum ADC readings across the cycle.

MS{node},MI105 Cosine Encoder/ Resolver #1 bias

Range: -32768 - 32767

Units: bits

Default: 0

This variable sets the value of the bias that is added to the Cosine ADC reading for the first channel before arctangent calculations are done to calculate position. It is generally set to the negative average of the maximum and minimum ADC readings across the cycle.

MS{node},MI106 Cosine Encoder/ Resolver #2 bias

Range: -32768 - 32767

Units: bits

Default: 0

This variable sets the value of the bias that is added to the Cosine ADC reading for the second channel before arctangent calculations are done to calculate position. It is generally set to the negative average of the maximum and minimum ADC readings across the cycle.

MS{node},MI107 Motor 1 Encoder-Loss Mask

Range: $0 - $F

Units: none

Default: $0

MI107 specifies which encoder-loss condition(s) will cause a shutdown fault on the first motor of the Geo MACRO drive. MI107 consists of 4 bits, each of which permits a shutdown fault on a specific encoder-loss condition.

If bit 0 (value of 1) is set to 1, then if the digital quadrature encoder-loss detection circuit for the encoder wired into X1 ("Encoder 1") reports a loss, the first motor will be shut down. If bit 0 is set to 0, there will be no reaction to this circuit reporting a loss.

If bit 1 (value of 2) is set to 1, then if the digital quadrature encoder-loss detection circuit for the encoder wired into X2 ("Encoder 2") reports a loss, the first motor will be shut down. If bit 1 is set to 0, there will be no reaction to this circuit reporting a loss.

If bit 2 (value of 4) is set to 1, then if the analog sinusoidal encoder-loss detection circuit for the encoder wired into X1 ("Encoder 1") reports a loss, the first motor will be shut down. If bit 2 is set to 0, there will be no reaction to this circuit reporting a loss.

If bit 3 (value of 8) is set to 1, then if the analog sinusoidal encoder-loss detection circuit for the encoder wired into X2 ("Encoder 2") reports a loss, the first motor will be shut down. If bit 3 is set to 0, there will be no reaction to this circuit reporting a loss.

As only one type of encoder can be wired into a given connector, at most one of the bits for that connector should be set to 1.

Encoder-loss faults are reported back to the Turbo PMAC over the MACRO ring as "amplifier fault" conditions. The Turbo PMAC motor controlling this Geo MACRO motor must be set to react to amplifier fault conditions (bit 20 of Ixx24 must be set to the default of 0) in order for Turbo PMAC to react to these encoder-loss conditions. Bits 21 and 22 of Ixx24 on the Turbo PMAC will control the effect on other motors of a detected encoder loss on this motor.

Examples:

- For no encoder-loss shutdown: MI107=0
- For Motor 1 shutdown on loss of digital quadrature on Encoder 1: MI107=1
- For Motor 1 shutdown on loss of analog sinusoid on Encoder 1: MI107=4
- For Motor 1 shutdown on loss of digital quadrature on Encoder 1 or Encoder 2 (dual feedback): MI107=3.

MS{node},MI108 Motor 2 Encoder-Loss Mask

Range: $0 - $F

Units: none

Default: $0

MI108 specifies which encoder-loss condition(s) will cause a shutdown fault on the second motor of the Geo MACRO drive. MI108 consists of 4 bits, each of which permits a shutdown fault on a specific encoder-loss condition.

If bit 0 (value of 1) is set to 1, then if the digital quadrature encoder-loss detection circuit for the encoder wired into X1 ("Encoder 1") reports a loss, the second motor will be shut down. If bit 0 is set to 0, there will be no reaction to this circuit reporting a loss.

If bit 1 (value of 2) is set to 1, then if the digital quadrature encoder-loss detection circuit for the encoder wired into X2 ("Encoder 2") reports a loss, the second motor will be shut down. If bit 1 is set to 0, there will be no reaction to this circuit reporting a loss.

If bit 2 (value of 4) is set to 1, then if the analog sinusoidal encoder-loss detection circuit for the encoder wired into X1 ("Encoder 1") reports a loss, the second motor will be shut down. If bit 2 is set to 0, there will be no reaction to this circuit reporting a loss.

If bit 3 (value of 8) is set to 1, then if the analog sinusoidal encoder-loss detection circuit for the encoder wired into X2 ("Encoder 2") reports a loss, the second motor will be shut down. If bit 3 is set to 0, there will be no reaction to this circuit reporting a loss.

As only one type of encoder can be wired into a given connector, at most one of the bits for that connector should be set to 1.

Encoder-loss faults are reported back to the Turbo PMAC over the MACRO ring as "amplifier fault" conditions. The Turbo PMAC motor controlling this Geo MACRO motor must be set to react to amplifier fault conditions (bit 20 of Ixx24 must be set to the default of 0) in order for Turbo PMAC to react to these encoder-loss conditions. Bits 21 and 22 of Ixx24 on the Turbo PMAC will control the effect on other motors of a detected encoder loss on this motor.

Examples:

- For no encoder-loss shutdown: MI108=0
- For Motor 2 shutdown on loss of digital quadrature on Encoder 2: MI108=2
- For Motor 2 shutdown on loss of analog sinusoid on Encoder 2: MI108=8

Note:

MS{node},MI107 and MI108 were added in Geo MACRO firmware versions 1.006 and above.

Primary Channel Node-Specific Gate Array MI-variables

MI-variables MI910 through MI929 on the Geo MACRO Station control the hardware setup of the hardware interface channel on the station associated a Geo MACRO Node. The matching of hardware interface channels to Geo MACRO Nodes is determined by the setting of the Station Number via the MACRO ring method.

These variables are accessed using the "MS{node}" station auxiliary read and write commands. The number immediately after the "MS" specifies the node number, and therefore the channel number mapped to that node by the MACRO ring method.

MS{node},MI910 Primary Encoder/Timer n Decode Control

Range: 0 - 15

Units: None

Default: 7

MI910 controls how the input signal for the encoder mapped to the specified node is decoded into counts. As such, this defines the sign and magnitude of a "count". The following settings may be used to decode an input signal.

0: Pulse and direction CW
1: x1 quadrature decode CW
2: x2 quadrature decode CW
3: x4 quadrature decode CW
4: Pulse and direction CCW
5: x1 quadrature decode CCW
6: x2 quadrature decode CCW
7: x4 quadrature decode CCW
8: Internal pulse and direction
9: Not used
10: Not used
11: x6 hall format decode CW
12: MLDT pulse timer control ;(internal pulse resets timer; external pulse latches timer)
13: Not used
14: Not used
15: x6 hall format decode CCW

In any of the quadrature decode modes; PMAC is expecting two input waveforms on CHAn and CHBn, each with approximately 50% duty cycle, and approximately one-quarter of a cycle out of phase with each other. "Times-one" (x1) decode provides one count per cycle; x2 provides two counts per cycle; and x4 provides four counts per cycle. The vast majority of users select x4 decode to get maximum resolution.

The "clockwise" (CW) and "counterclockwise" (CCW) options simply control which direction counts up. If you get the wrong direction sense, simply change to the other option (e.g. from 7 to 3 or vice versa).

Note:

If you change the direction sense of an encoder with a properly working servo without also changing the direction sense of the output, you can get destabilizing positive feedback to your servo and a dangerous runaway condition.

In the pulse-and-direction decode mode, PMAC is expecting the pulse train on CHAn, and the direction

(sign) signal on CHBn. If the signal is unidirectional, the CHBn line can be allowed to pull up to a high state, or it can be hardwired to a high or low state.

If MI910 is set to 8, the decoder inputs the pulse and direction signal generated by Channel n's pulse frequency modulator (PFM) output circuitry. This permits the GEO MACRO Station to create a phantom closed loop when driving an open-loop stepper system. *No jumpers or cables are needed to do this; the connection is entirely within the ASIC.* The counter polarity automatically matches the PFM output polarity.

If MI910 is set to 12, the timer circuitry is set up to read magneto-strictive linear displacement transducers (MLDTs) such as Temposonics™. In this mode, the timer is cleared when the PFM circuitry sends out the excitation pulse to the sensor on PULSEn, and it is latched into the memory-mapped register when the excitation pulse is received on CHAn.

If MI910 is set to 11 or 15, the channel is set up to accept 3-phase "hall-effect" style inputs on the A, B, and C inputs, decoding 6 states per cycle.

MS{node},MI911 Primary Enc. Position Compare n Channel Select

Range: 0 - 1

Units: None

Default: 0

0: Use channel n encoder counter for position compare function

1: Use first encoder counter on IC (encoder 1 for channels 1 to 4; encoder 5 for channels 5 to 8) for position compare function

MI911 determines which encoder input that the position compare circuitry for the machine interface channel mapped to the specified node uses.

When MI911 is set to 0, the channel's position compare register is tied to the channel's own encoder counter, and the position compare signal appears only on the EQUn output.

When MI911 is set to 1, the channel's position compare register is tied to the first encoder counter on the ASIC -- Encoder 1 for channels 1-4, Encoder 5 for channels 5-8, or Encoder 9 for channels 9-10 -- and the position compare signal appears both on EQUn, and combined into the EQU output for the first channel on the IC (EQU1 or EQU5); executed as a logical OR.

MI911 for the first channel on an ASIC performs no effective function, so is always 1. It cannot be set to 0.

MS{node},MI912 Primary Encoder n Capture Control

Range: 0 - 15

Units: none

Default: 1

This parameter determines which signal or combination of signals, and which polarity, triggers a position capture of the counter for the encoder mapped to the specified node. If a flag input (home, limit, or user) is used, MI913 for the node determines which flag. Proper setup of this variable is essential for a successful home search, which depends on the position-capture function. The following settings may be used:

0: Immediate capture
1: Capture on Index (CHCn) high
2: Capture on Flag high
3: Capture on (Index high AND Flag high)
4: Immediate capture
5: Capture on Index (CHCn) low
6: Capture on Flag high
7: Capture on (Index low AND Flag high)
8: Immediate capture
9: Capture on Index (CHCn) high
10: Capture on Flag low
11: Capture on (Index high AND Flag low)
12: Immediate capture
13: Capture on Index (CHCn) low
14: Capture on Flag low
15: Capture on (Index low AND Flag low)

The trigger is armed when the position capture register is read. After this, as soon as the GEO MACRO Station sees that the specified input lines are in the specified states, the trigger will occur -- it is level-trigger, not edge-triggered.

MS{node},MI913 Primary Encoder Capture n Flag Select Control

Range: 0 - 3

Units: 0 = HMFLn (Home Flag n)
1 = PLIMn (Positive End Limit Flag n)
2 = MLIMn (Negative End Limit Flag n)
3 = USERn (User Flag n)

Default: 0

This parameter determines which of the "Flag" inputs will be used for position capture (if one is used -- see MI912):

This parameter is typically set to 0 or 3, because in actual use, the LIMn flags create other effects that usually interfere with what is trying to be accomplished by the position capture. If you wish to capture on the LIMn flags, you probably will want to disable their normal functions with Ixx25, or use a channel n where none of the flags is used for the normal axis functions.

MS{node},MI914 Primary Encoder n Gated Index Select

Range: 0 - 1

Units: none

0 = Use ungated index for encoder position capture

1 = Use index gated by quadrature channels for position capture

Default: 0

When MI914 is set to 0, the index channel input (CHCn) for the encoder mapped to the specified GEO MACRO Node is passed directly into the position capture circuitry.

When MI914 is set to 1, the encoder index channel input (CHCn) is logically combined with ("gated by") the quadrature signals of Encoder n before going to the position capture circuitry. The intent is to get a "gated index" signal exactly one quadrature state wide. This provides a more accurate and repeatable capture, and makes the use of the capture function to confirm the proper number of counts per revolution very straightforward.

In order for the gated index capture to work reliably, the index pulse must reliably span one, but only one, "high-high" or "low-low" AB quadrature state of the encoder. MI915 allows you to select which of these two possibilities is used.

MS{node},MI915 Primary Encoder Index Gate State/Demux Control

Range: 0 - 3

Units: 0 = Gate index with "high-high" quadrature state (GI = A & B & C)

1 = Gate index with "low-low" quadrature state (GI = A/ & B/ & C)

2 or 3 = De-multiplex hall and index from third channel, gating irrelevant

Default: 0

MI915 is a 2-bit variable that controls two functions for the index channel of the encoder.

When using the gated index feature of a PMAC2-style Servo IC for more accurate position capture (MI914=1), bit 0 of MI915 specifies whether the raw index-channel signal fed into the Encoder is passed through to the position capture signal only on the high-high quadrature state (bit 0 = 0), or only on the low-low quadrature state (bit 0 = 1).

Bit 1 of MI915 controls whether the Servo IC de-multiplexes the index pulse and the three hall-style commutation states from the third channel based on the quadrature state, as with Yaskawa incremental encoders. If bit 1 is set to 0, this de-multiplexing function is not performed, and the signal on the C channel of the encoder is used as the index only. If bit 1 is set to 1, the Servo IC breaks out the third-channel signal into four separate values, one for each of the four possible AB-quadrature states. The de-multiplexed hall commutation states can be used to provide power-on phase position using Ixx81 and Ixx91.

The following table shows what hall or index state is broken out for each of the four quadrature states:

A	B	C
1	1	Z
1	0	U
0	0	V
0	1	W

See also: MI943

Secondary encoder Channel Node-Specific Gate Array MI-variables

MS{node},MI910 Secondary Encoder Decode Control

Range: 0 - 15

Units: None

Default: 0

MI910 controls how the input signal for the secondary encoder mapped to the specified node is decoded into counts. As such, this defines the sign and magnitude of a "count". The following settings may be used to decode an input signal.

0: x4 quadrature decode
1: x1 quadrature decode

In any of the quadrature decode modes, PMAC is expecting two input waveforms on CHAn and CHBn, each with approximately 50% duty cycle, and approximately one-quarter of a cycle out of phase with each other. "Times-one" (x1) decode provides one count per cycle; and x4 provides four counts per cycle. The vast majority of users select x4 decode to get maximum resolution.

MS{node},MI911 Secondary Encoder counter Direction

Range: 0 - 1

Units: None

Default: 0

MI911 controls the direction sense for the secondary encoder mapped into the specified node. It ca take the following settings:

0: Clock-Wise (CW)

1: Counter-Clock-Wise (CCW)

The "clockwise" (CW) and "counterclockwise" (CCW) options simply control which direction counts up. If you get the wrong direction sense, simply change to the other option (e.g. from 1 to 0 or vice versa).

Note:

If you change the direction sense of an encoder with a properly working servo without also changing the direction sense of the output, you can get destabilizing positive feedback to your servo and a dangerous runaway condition.

MS{node},MI912 Secondary Encoder Index Capture Control

Range: 0 - 15

Units: none

Default: 0

This parameter determines for the index flag which polarity, triggers a position capture of the counter for the secondary encoder mapped to the specified node. If a flag input (home or index) is used, MI915 for the node determines which flag. Proper setup of this variable is essential for a successful home search, which depends on the position-capture function. The following settings may be used:

0: Capture on Index (CHCn) rising edge
1: Capture on Index (CHCn) falling edge

The trigger is armed when the position capture register is read. After this, as soon as the Geo MACRO Station sees that the specified input lines are in the specified states, the trigger will occur -- it is edge-trigger, not level-triggered.

MS{node},MI913 Secondary Encoder Home Flag Capture Control

Range: 0 - 15

Units: none

Default: 0

This parameter determines for the Home flag which polarity, triggers a position capture of the counter for the secondary encoder mapped to the specified node. If a flag input (index or Home flag) is used, MI915 for the node determines which flag. Proper setup of this variable is essential for a successful home search, which depends on the position-capture function. The following settings may be used:

0: Capture on HOME flag rising edge
1: Capture on HOME flag falling edge

The trigger is armed when the position capture register is read. After this, as soon as the Geo MACRO Station sees that the specified input lines are in the specified states, the trigger will occur -- it is edge-trigger, not level-triggered.

MS{node},MI914 Secondary Encoder Filter Control

Range: 0 - 256

Units: 40Mhz Clock Cycles

Default: 0

MI914 controls the rate at which the input signals of the secondary encoder for the specified node are sampled. The inputs are sampled every (MI914+1) clock cycles, where each clock cycle is 25nanoseconds. Higher values of MI914 can filter out longer noise spikes, but permit lower count rates, as only one quadrature edge per sample period can be accepted

MS{node},MI915 Secondary Encoder Capture Flag Select Control

Range: 0 - 3

Units: $00C0: Capture on Index
$6000: Capture on Home Flag
$40C0: Capture on Home Flag AND Index

Default: 0

This parameter determines which of the "Flag" inputs will be used for position capture (if one is used -- see MI912 and MI913 for secondary encoders)

Note:

Immediately after power-up, the Yaskawa encoder automatically cycles its AB outputs forward and back through a full quadrature cycle to ensure that all of the hall commutation states are available to the controller before any movement is started. However, if the encoder is powered up at the same time as the Turbo PMAC, this will happen before the Servo IC is ready to accept these signals. Bit 2 of the channel's status word, Invalid De-multiplex, will be set to 1 if the Servo IC has not seen all of these states when it was ready for them. To use this feature, it is recommended that the power to the encoder be provided through a software-controlled relay to ensure that valid readings of all states have been read before using these signals for power-on phasing.

MS{node},MI916 Output n Mode Select

Range: 0 - 3

Units: none

0 = Outputs A & B are PWM; Output C is PWM

1 = Outputs A & B are DAC; Output C is PWM

2 = Outputs A & B are PWM; Output C is PFM

3 = Outputs A & B are DAC; Output C is PFM

Default: 3

MI916 controls what output formats are used on the command output signal lines for machine interface channel n. If a three-phase direct PWM command format is desired, MI916 should be set to 0. If signal outputs for (external) digital-to-analog converters are desired, MI916 should be set to 1 or 3. In this case, the C output can be used as a supplemental (non-servo) output in either PWM or PFM form. For example, it can be used to excite an MLDT sensor (e.g. Temposonics™) in PFM form.

Geo MACRO drives require PWM signals so MI916=0

MS{node},MI917 Output n Invert Control

Range: 0 - 3

Units: none

0 = Do not invert Outputs A & B; Do not invert Output C

1 = Invert Outputs A & B; Do not invert Output C

2 = Do not invert Outputs A & B; Invert Output C

3 = Invert Outputs A & B; Invert Output C

Default: 0

MI917 controls the polarity of the command output signals for Channel n. The default non-inverted outputs are high true. For PWM signals on Outputs A, B, and C, this means that the transistor-on signal is high. Delta Tau PWM-input amplifiers, and most other PWM-input amplifiers, expect this non-inverted output format. For such a 3-phase motor drive, MI917 should be set to 0.

For PFM signals on Output C, non-inverted means that the pulse-on signal is high (direction polarity is controlled by MI918). During a change of direction, the direction bit will change synchronously with the leading edge of the pulse, which in the non-inverted form is the rising edge. If the drive requires a set-up time on the direction line before the rising edge of the pulse, the pulse output can be inverted so that the rising edge is the trailing edge, and the pulse width (established by MI904 or MI908) is the set-up time.

For DAC signals on Outputs A and B, non-inverted means that a 1 value to the DAC is high. DACs used on Delta Tau accessory boards, as well as all other known DACs always expect non-inverted inputs, so MI917 should always be set to 0 or 2 when using DACs on Channel n.

MS{node},MI918 Output n PFM Direction Signal Invert Control

Range: 0 - 1

Units: none

0 = Do not invert direction signal (+ = low; - = high)

1 = Invert direction signal (- = low; + = high)

Default: 0

MI918 controls the polarity of the direction output signal in the pulse-and-direction format for Channel n. It is only active if MI916 has been set to 2 or 3 to use Output C as a pulse-frequency-modulated (PFM) output.

If MI918 is set to the default value of 0, a positive direction command provides a low output; if MI918 is set to 1, a positive direction command provides a high output.

MS{node},MI919 Hardware 1/T

Range: 0 - 1

Units: 0 = Do not use hardware 1/T

1 = Use hardware 1/T

Default: 0

MI919 controls whether the hardware-1/T functionality is enabled for Channel n of a PMAC2-style Servo IC m. If MI919 is set to the default value of 0, the hardware-1/T functionality is disabled, permitting the use of the software-1/T position extension that is calculated by default with encoder conversion method $0. If MI919 is set to 1, the hardware-1/T functionality is enabled (if present on the IC), and the software-1/T cannot be used.

The hardware-1/T functionality is present only on Revision D and newer of the PMAC2-style DSPGATE1 IC, released at the beginning of the year 2002. Setting MI919 to 1 on an older revision IC

does nothing – software-1/T functions can still be used. However, it is strongly recommended that MI919 be left at 0 in this case, to prevent possible problems when copying a configuration to newer hardware.

When the hardware-1/T functionality is enabled, the IC computes a new fractional-count position estimate based on timers every SCLK (encoder sample clock) cycle. This permits the fractional count data to be used for hardware capture and compare functions, enhancing their resolution. The sub-count position-capture data can be used automatically in Turbo PMAC triggered-move functions if bit 12 of Ixx24 is set to 1. This is particularly useful when the IC is used with a high-resolution analog-encoder interpolator option. However, it replaces the timer registers at the first two "Y" addresses for the channel with fractional count position data, so the traditional software-1/T method of the conversion table cannot work if this is enabled.

If the hardware-1/T functionality is enabled and to be able to use 1/T interpolation in the servo loop, use the hardware-1/T extension method ($C method digit with the mode switch bit set to 1) in the encoder conversion table.

MS{node},MI921 Flag Capture Position (Read Only)

Range: $0 - $FFFFFF

Units: counts

Default: 0

This variable, when queried, reports the value of the captured position for the machine interface channel mapped to the specified Geo MACRO Node. Refer to the Motor command/status flag registers for their relationship to this value.

MS{node},MI922 ADC A Input Value (Read Only)

Range: $000000 - $FFFFFF

Units: Bits of a 24-bit ADC

MI922 reports the value of the serial ADC input register A for the machine interface channel mapped to the specified Geo MACRO Node number. The value is reported as a 24-bit number, even though there are a maximum of 18 real bits in the register (the most significant bits) and existing hardware provides 12 or 16 bits of true input.

MS{node},MI923 Compare Auto-Increment Value

Range: -8,388,608 - 8,388,607

Units: Encoder counts

Default: 0

MI923 specifies the value of the position-compare auto-increment register for the machine interface channel mapped to the specified Geo MACRO Node number.

MS{node},MI924 ADC B Input Value (Read Only)

Range: -8,388,608 - 8,388,607

Units: Bits of a 24-bit ADC

MI924 reports the value of the serial ADC input register B for the machine interface channel mapped to

the specified Geo MACRO Node number. The value is reported as a 24-bit number, even though there are a maximum of 18 real bits in the register (the most significant bits) and existing hardware provides 12 or 16 bits of true input.

MS{node},MI925 Compare A Position Value

Range: -8,388,608 - 8,388,607

Units: Encoder counts

Default: 0

MI925 specifies the value of the 'A' compare register of the position compare function for the machine interface channel mapped to the specified Geo MACRO Node number. The units are encoder counts, referenced to the position at the latest power-on or reset.

MS{node},MI926 Compare B Position Value

Range: -8,388,608 - 8,388,607

Units: Encoder counts

Default: 0

MI926 specifies the value of the 'B' compare register of the position compare function for the machine interface channel mapped to the specified Geo MACRO Node number. The units are encoder counts, referenced to the position at the latest power-on or reset.

MS{node},MI927 (Reserved for future use)

Range: **0**

Units: **0**

Default: 0

MS{node},MI928 Compare-State Write Enable

Range: 0 – 1

Units: none

Default: 0

When MI928 is set to 1, the value of MI929 if forced onto the position-compare output for the channel associated with the specified node. MI928 is automatically reset to 0 immediately after this occurs.

MS{node},MI929 Compare-Output Initial State

Range: 0 – 1

Units: none

Default: 0

The value of MI929 is forced onto the position-compare output for the channel associated with the specified node when MI928 is set to 1. After this, each time the channel's encoder-counter position matches the value of MI925 or MI926, the output state is toggled.

General Hardware Setup MI-variables

MS{anynode}, MI930 SSI Channel 1 Control Word

Range: $0- $F

Units: none

Default: 0

MI930 specifies the mode for interpreting data from the first SSI-encoder interface. In addition, it specifies the word length in bits from the first SSI-encoder interface. The following table lists the possible values of MI930 and the data formats they cause the Geo MACRO to expect:

MI930	Description	MI930	Description
$0	Reserved for future use	$8	Reserved for future use
$1	Reserved for future use	$9	Reserved for future use
$2	12-bit numeric binary	$A	20-bit numeric binary
$3	12-bit Gray code	$B	20-bit Gray code
$4	Reserved for future use	$C	Reserved for future use
$5	Reserved for future use	$D	Reserved for future use
$6	16-bit numeric binary	$E	24-bit numeric binary
$7	16-bit Gray code	$F	24-bit Gray code

MS{anynode}, MI931 SSI Channel 2 Control Word

Range: $0- $F

Units: none

Default: 0

MI931 specifies the mode for interpreting data from the second SSI-encoder interface. In addition, it specifies the word length in bits from the second SSI-encoder interface.

The following table lists the possible values of MI931 and the data formats they cause the Geo MACRO to expect:

MI931	Description	MI931	Description
$0	Reserved for future use	$8	Reserved for future use
$1	Reserved for future use	$9	Reserved for future use
$2	12-bit numeric binary	$A	20-bit numeric binary
$3	12-bit Gray code	$B	20-bit Gray code
$4	Reserved for future use	$C	Reserved for future use
$5	Reserved for future use	$D	Reserved for future use
$6	16-bit numeric binary	$E	24-bit numeric binary
$7	16-bit Gray code	$F	24-bit Gray code

MS{anynode}, MI932 Resolver Excitation Frequency Divider

Range: 0 – 3
Units: none
Default: 0

MI932 specifies the frequency of the AC excitation output created by the Geo MACRO for resolvers as a function of the phase clock frequency set by I7m00 and I7m01. The following table lists the possible values of MI932 and the excitation frequencies they produce:

MI932	Excitation Freq.
0	PhaseFreq
1	PhaseFreq/2
2	PhaseFreq/4
3	PhaseFreq/6

MS{anynode}, MI933 SSI Clock Frequency Divider

Range: 0 – 3

Units: none

Default: 0

MI933 specifies the frequency of the digital clock output for the SSI-encoder interface. The following table lists the possible values of MI933 and the clock frequencies they produce:

MI933	SSI Clock Freq.
0	153.6 kHz
1	307.2 kHz
2	614.4 kHz
3	1.2288 MHz

MS{anynode},MI934-MI939 (Reserved for future use)

Range: 0

Units: none

Default: 0

MS{anynode}, MI940 Resolver Excitation Gain

Range: 0 – 3
Units: Gain-1
Default: 0

MI940 specifies the gain of the AC excitation output created by the Geo MACRO for resolvers, with the gain equal to (MI940 - 1). With a gain of 1, the nominal AC output has peak voltages of +/-2.5V. The following table lists the possible values of MI940 and the nominal output magnitudes they produce:

MI940	Excitation Gain
0	+/-2.5V
1	+/-5.0V
2	+/-7.5V
3	+/-10.0V

MS{anynode}, MI941 Resolver Excitation Phase Offset

Range: 0 – 255
Units: 1/256 cycle
Default: 0

MI941 specifies the phase (time) offset for the AC excitation created by the Geo MACRO for resolvers. The optimum setting of MI941 depends on the L/R time constant of the resolver circuit. MI941 should be set interactively to maximize the magnitudes of the feedback ADC values. The Turbo setup takes care of this.

MS{anynode},MI942 ADC Strobe Word Channel 1* & 2*

Range: $000000 - $FFFFFF

Units: Serial Data Stream (MSB first, starting on rising edge of phase clock)

Default: $3FFFFF

MI942 controls the ADC strobe signal for machine interface channels on Servo IC m. The 24-bit word set by MI942 is shifted out serially on the ADC_STROB lines, MSB first, one bit per DAC_CLK cycle starting on the rising edge of the phase clock. The value in the LSB is held until the next phase clock cycle.

The first 1 creates a rising edge on the ADC_STROB output that is typically used as a start-convert signal. Some A/D converters just need this rising edge for the conversion; others need the signal to stay high all of the way through the conversion. The MSB of MI942 should always be set to 0 so that a rising edge is created on the next cycle. The default MI942 value of $3FFFFF is suitable for virtually all A/D converters.

MS{node},MI943 Encoder Power control bit

Range: **0-3**

Units: **0**

Default: 3

MI943 was implemented in the Geo MACRO firmware 1.007 and above. It controls the 5V encoder power line (pin 12) of the primary encoder feedback connectors (X1 and X2). When MI915 is set equal to 1 the Servo IC de-multiplexes the index pulse and the three hall-style commutation states from the third channel based on the quadrature state, as with Yaskawa and Sanyo incremental encoders. The Servo IC breaks out the third-channel signal into four separate values, one for each of the four possible AB-quadrature states. These encoders need to be power cycled so as to send the Hall sensor signals, and that is what MI943 does so the user does not have to power cycle the whole Geo MACRO drive, 24VDC.

If MI943 is set equal to 0, both ENCPWR (#1 and #2) would be turned off (0V), if the value is equal to 1 then ENCPWR#1 is turned on (ENCPWR#2 is off). When MI943 is set equal to 2 then ENCPWR#2 is turned on (ENCPWR#1 is off), if MI943 is set equal to 3 (default) then both ENCPWR (#1 and #2) are turned on.

MS{node},MI944-MI949 (Reserved for future use)

Range: 0

Units: none

Default: 0

Global & 2-Axis Board I-Variables

MI-Variables numbered in the MI990s control hardware aspects of the “DSPGATE2” ASIC. This IC controls operation of the Geo MACRO Ring on all Geo MACRO Stations. This IC also controls the frequency of the clock signals for the 2-axis piggyback board (machine interface channels 1 & 2).

MS{node},MI992 MaxPhase Frequency Control

Range: 0 - 32767

Units: MaxPhase Frequency = 117,964.8 kHz / [2*MI992+3]
PWM Frequency = 117,964.8 kHz / [4*MI992+6]

Default: 6527
MaxPhase Frequency = 117,964.8 / 13057 = 9.0346 kHz
PWM Frequency = 117,964.8 / 26114 = 4.5173 kHz

MI992 controls the "maximum phase" clock frequency for the Geo MACRO Station, and the PWM frequency for supplementary handwheel interface channels 1 and 2. It does this by setting the limits of the PWM up-down counter, which increments and decrements at the PWMCLK frequency of 117,964.8 kHz (117.9648 MHz).

The actual phase clock frequency is divided down from the maximum phase clock according to the setting of MI997. The phase clock frequency must be the same as the ring update frequency as set by the ring controller - usually a Turbo PMAC2. If the ring controller is a PMAC2 Ultralite, MI992 and MI997 on the 16-Axis MACRO Station should be set to the same values as MI992 and MI997 on the PMAC2 Ultralite.

To set MI992 for a desired "maximum phase" clock frequency, the following formula can be used:

MI992 = (117,964.8 kHz / [2*MaxPhase (kHz)]) - 1 (rounded down)

Examples:
To set a PWM frequency of 10 kHz and therefore a MaxPhase clock frequency of 20 kHz:
MI992 = (117,964.8 kHz / [4*10 kHz]) - 1 = 2948

To set a PWM frequency of 7.5 kHz and therefore a MaxPhase clock frequency of 15 kHz:
MI992 = (117,964.8 kHz / [4*7.5 kHz]) - 1 = 3931

MS{node},MI993 Hardware Clock Control Handwheel Channels

Range: 0 - 4095

Units: MI993 = Encoder SCLK Divider
+ 8 * PFM_CLK Divider
+ 64 * DAC_CLK Divider
+ 512 * ADC_CLK Divider

where:
Encoder SCLK Frequency = 39.3216 MHz / (2 ^ Encoder SCLK Divider)
PFM_CLK Frequency = 39.3216 MHz / (2 ^ PFM_CLK Divider)
DAC_CLK Frequency = 39.3216 MHz / (2 ^ DAC_CLK Divider)
ADC_CLK Frequency = 39.3216 MHz / (2 ^ ADC_CLK Divider)

Default: 2258 = 2 + (8 * 2) + (64 * 3) + (512 * 4)
Encoder SCLK Frequency = 39.3216 MHz / (2 ^ 2) = 9.8304 MHz
PFM_CLK Frequency = 39.3216 MHz / (2 ^ 2) = 9.8304 MHz

DAC_CLK Frequency = 39.3216 MHz / (2 ^ 3) = 4.9152 MHz
ADC_CLK Frequency = 39.3216 MHz / (2 ^ 4) = 2.4576 MHz

MI993 controls the frequency of three hardware clock frequencies -- SCLK, PFM_CLK, DAC_CLK and ADC_CLK -- for the handwheel interface channels 1 and 2. It is a 12-bit variable consisting of four independent 3-bit controls, one for each of the clocks. Each of these clock frequencies can be divided down from a starting 39.3216 MHz frequency by powers of 2, 2^N, from 1 to 128 times (N=0 to 7). This means that the possible frequency settings for each of these clocks are:

Frequency	Divide by	Divider N in $1/2^N$
39.3216 MHz	1	0
19.6608 MHz	2	1
9.8304 MHz	4	2
4.9152 MHz	8	3
2.4576 MHz	16	4
1.2288 MHz	32	5
611.44 kHz	64	6
305.72 kHz	128	7

Very few Geo MACRO Station users will be required to change the setting of MI993 from the default value.

The encoder sample clock signal SCLK controls how often 2-axis board's digital hardware looks at the encoder inputs. PMAC2 can take at most one count per SCLK cycle, so the SCLK frequency is the absolute maximum encoder count frequency. SCLK also controls the signal propagation through the digital delay filters for the encoders and flags; the lower the SCLK frequency, the greater the noise pulse that can be filtered out. The SCLK frequency should optimally be set to the lowest value that can accept encoder counts at the maximum possible rate.

The pulse-frequency-modulation clock PFM_CLK controls the PFM circuitry on the 2-axis board that can create pulse and direction outputs. The maximum pulse frequency possible is 1/4 of the PFM_CLK frequency. The PFM_CLK frequency should optimally be set to the lowest value that can generate pulses at the maximum frequency required.

The ADC_CLK controls the serial data frequency from A/D converters, either for digital current loop closure, or from the A/D converter options.

The DAC-CLK controls the serial data frequency to D/A converters which are optional. To determine the clock frequencies set by a given value of MI993, use the following procedure:

1. Divide MI993 by 512 and round down to the nearest integer. This value N1 is the ADC_CLK divider.
2. Multiply N1 by 512 and subtract the product from MI993 to get MI993'. Divide MI993' by 64 and round down to the nearest integer. This value N2 is the DAC_CLK divider (not relevant here).
3. Multiply N2 by 64 and subtract the product from MI993' to get MI993". Divide MI993" by 8 and round down to the nearest integer. This value N3 is the PFM_CLK divider.
4. Multiply N3 by 8 and subtract the product from MI993". The resulting value N4 is the SCLK divider.

Examples:
The maximum encoder count frequency in the application is 800 kHz, so the 1.2288 MHz SCLK frequency is chosen. A pulse train up to 500 kHz needs to be generated, so the 2.4576 MHz PFM_CLK frequency is chosen. ADCs and DACs are not used, so the default DAC_CLK frequency of 4.9152 MHz and the default ADC_CLK frequency of 2.4576 MHz are chosen. From the table:

SCLK Divider N: 5
PFM_CLK Divider N: 4
DAC_CLK Divider N: 3
ADC_CLK Divider N: 4
MI993 = 5 + (8 * 4) + (64 * 3) + (512 * 4) = 5 + 32 + 192 + 2048 = 2277

MI993 has been set to 3429. What clock frequencies does this set?

N1 = INT (3429/512) = 6	ADC_CLK = 611.44 kHz
MI993' = 3429 - (512*6) = 357	
N2 = INT (357/64) = 5	DAC_CLK = 1.2288 MHz
MI993" = 357 - (64*5) = 37	
N3 = INT (37/8) = 4	PFM_CLK = 2.4576 MHz
N4 = 37 - (8*4) = 5	SCLK = 1.2288 MHz

MS{node},MI994 PWM Deadtime

Range: 0 - 255

Units: PWM Deadtime = [16 / PWM_CLK (MHz)] * MI994 = 0.135 µsec * MI994
PFM Pulse Width = [1 / PFM_CLK (MHz)] * MI994
= PFM_CLK_period (µsec) * MI994

Default: 15
PWM Deadtime = 0.135 µsec * 15 = 2.03 µsec
PFM Pulse Width = [1 / 9.8304 MHz] * 15 = 1.526 µsec (with default MI993)

MI994 controls the deadtime period between top and bottom on-times in the Geo MACRO Station's automatic PWM generation for machine interface handwheel channels 19 and 2. In conjunction with MI993, it also controls the pulse width for PMAC2's automatic pulse-frequency modulation generation for these machine interface channels.

The PWM deadtime, which is the delay between the top signal turning off and the bottom signal turning on and vice versa, is specified in units of 16 PWM_CLK cycles. This means that the deadtime can be specified in increments of 0.135 µsec. The equation for MI994 as a function of PWM deadtime is:

MI994 = Deadtime (µsec) / 0.135 µsec

The PFM pulse width is specified in PFM_CLK cycles, as defined by MI993. The equation for MI994 as a function of PFM pulse width and PFM_CLK frequency is:

MI994 = PFM_CLK Freq (MHz) / PFM pulse width (µsec)

In PFM pulse generation, the minimum off time between pulses is equal to the pulse width. This means that the maximum PFM output frequency is

PFM Max_Freq (MHz) = PFM_CLK Freq / (2 * MI994)

Examples:
A PWM deadtime of approximately 1 microsecond is desired:

MI994 ≅ 1 µsec / 0.135 µsec ≅ 7

With a 2.4576 MHz PFM_CLK frequency, a pulse width of 0.4 µsec is desired:

MI994 ≅ 2.4576 MHz * 0.4 µsec ≅ 1

MS{node},MI995 MACRO Ring Configuration/Status

Range: $0000 - $FFFF (0 - 65,535)

Units: none

Default: $0080

MI995 contains configuration and status bits for MACRO ring operation of the Geo MACRO Station. There are 11 configuration bits and 5 status bits, as follows:

Bit #	Value	Type	Function
0	1($1)	Status	Data Overrun Error (cleared when read)
1	2($2)	Status	Byte Violation Error (cleared when read)
2	4($4)	Status	Packet Parity Error (cleared when read)
3	8($8)	Status	Packet Underrun Error (cleared when read)
4	16($10)	Config	Master Station Enable
5	32($20)	Config	Synchronizing Master Station Enable
6	64($40)	Status	Sync Node Packet Received (cleared when read)
7	128($80)	Config	Sync Node Phase Lock Enable
8	256($100)	Config	Node 8 Master Address Check Disable
9	512($200)	Config	Node 9 Master Address Check Disable
10	1024($400)	Config	Node 10 Master Address Check Disable
11	2048($800)	Config	Node 11 Master Address Check Disable
12	4096($1000)	Config	Node 12 Master Address Check Disable
13	8192($2000)	Config	Node 13 Master Address Check Disable
14	16384($4000)	Config	Node 14 Master Address Check Disable
15	32768($8000)	Config	Node 15 Master Address Check Disable

A Geo MACRO Station is a slave on the ring in all normal operation, so configuration bits 4 and 5 are set to 0. It should synchronize itself to the sync node, so configuration bit 7 should be set to 1. In most applications, it will only accept packets from its own master so bits 8 to 15 are all set to 0. All other bits are status bits that are normally 0. This makes the usual setting of MI995 equal to $0080.

MS{node},MI996 MACRO Node Activate Control

Range: $000000 to $FFFFFF (0 to 8,388,607)

Units: none

Default: $0

MI996 controls which of the MACRO nodes on the Geo MACRO Station are activated. It also controls the master station number, and the node number of the packet that creates a synchronization signal.

On a power-up or reset of the Geo MACRO Station, MI996 for MACRO IC 0 is set automatically by Station firmware as a function of SW1 and SW2 switch settings, plus the saved values of MI975 and MI976.

The bits of MI996 are arranged as follows:

Bit #	Value	Type	Function
0	1($1)	Config	Node 0 Activate
1	2($2)	Config	Node 1 Activate
2	4($4)	Config	Node 2 Activate
3	8($8)	Config	Node 3 Activate
4	16($10)	Config	Node 4 Activate
5	32($20)	Config	Node 5 Activate
6	64($40)	Config	Node 6 Activate
7	128($80)	Config	Node 7 Activate
8	256($100)	Config	Node 8 Activate
9	512($200)	Config	Node 9 Activate
10	1024($400)	Config	Node 10 Activate
11	2048($800)	Config	Node 11 Activate

12	4096($1000)	Config	Node 12 Activate
13	8192($2000)	Config	Node 13 Activate
14	16384($4000)	Config	Node 14 Activate
15	32768($8000)	Config	Node 15 Activate
16-19	$X0000	Config	Packet Sync Node Slave Address (0 - 15)
20-23	$X00000	Config	Master Station Number (0-15)

Bits 0 to 15 are individual control bits for the matching node number 0 to 15. If the bit is set to 1, the node is activated; if the bit is set to 0, the node is de-activated. On power-up reset, these bits are set as defined by the SW1 setting, with some motor nodes possibly disabled by MI976, and some I/O nodes possibly enabled by MI975. Node 15 should always be activated to support the Type 1 auxiliary communications.

Bits 16-19 specify the slave number of the packet which will generate the "sync pulse" on the Geo MACRO Station. This is always set to 15 ($F) on the Geo MACRO Station.

Bits 20-23 specify the master number (0-15) for the Geo MACRO Station. At power-up/reset, these bits get the value set by SW2. The number must be specified whether the card is a master station or a slave station.

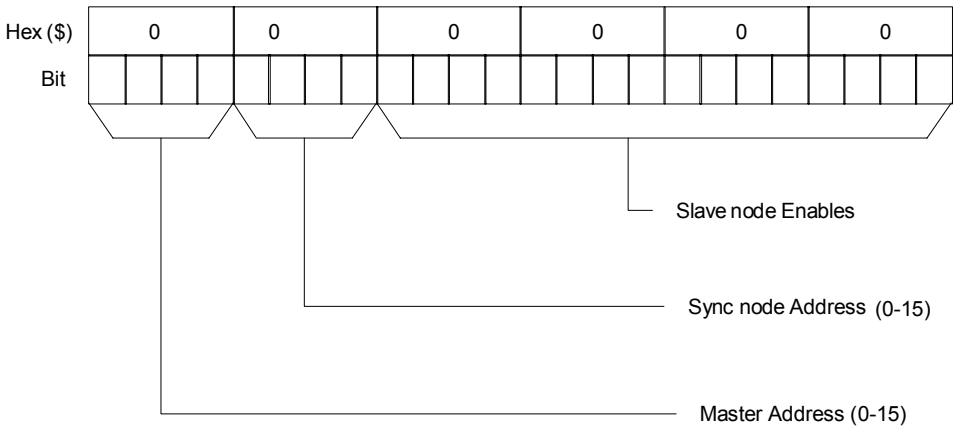

MS{node},MI997 Phase Clock Frequency Control

Range: 0 - 15

Units: PHASE Clock Frequency = MaxPhase Frequency / (MI997+1)

Default: 0
PHASE Clock Frequency = 9.0346 kHz / 1 = 9.0346 kHz
(with default value of MI992)

MI997, in conjunction with MI992, determines the frequency of the PHASE clock on a Geo MACRO Station. Each cycle of the PHASE clock, a set of MACRO ring information is expected, and any data transfers between MACRO nodes and interface circuitry are performed. The PHASE clock cycle on the Geo MACRO Station should match that of the PMAC commanding it as closely as possible.

Specifically, MI997 controls how many times the PHASE clock frequency is divided down from the "maximum phase" clock, whose frequency is set by MI992. The PHASE clock frequency is equal to the "maximum phase" clock frequency divided by (MI997+1). MI997 has a range of 0 to 15, so the frequency division can be by a factor of 1 to 16. The equation for MI997 is:

MI997 = (MaxPhase Freq / PHASE Clock Freq) - 1

The ratio of MaxPhase Freq. to PHASE Clock Freq. must be an integer.

Example:

With a 20 kHz MaxPhase Clock frequency established by MI992, and a desired 6.67 kHz PHASE clock frequency, the ratio between MaxPhase and PHASE is 3:

MI997 = (20 / 6.67) - 1 = 3 -1 = 2

MS{node},MI998 Servo Clock Frequency Control

Range: 0 - 15

Units: Servo Clock Frequency = PHASE Clock Frequency / (MI998+1)

Default: 0
PHASE Clock Frequency = 9.0346 kHz / (0+1) = 9.0346 kHz
(with default values of MI992 and MI997)

Note:

There is currently no software use of the SERVO clock on the Geo MACRO Station. However, it is needed to capture certain encoder values in the DSPGATEx Servo ICs.

MI998, in conjunction with MI997 and MI992, determines the frequency of the SERVO clock on the Geo MACRO Station.

Specifically, MI998 controls how many times the SERVO clock frequency is divided down from the PHASE clock, whose frequency is set by MI992 and MI997. The SERVO clock frequency is equal to the PHASE clock frequency divided by (MI998+1). MI998 has a range of 0 to 15, so the frequency division can be by a factor of 1 to 16. The equation for MI998 is:

MI998 = (PHASE Clock Freq. / SERVO Clock Freq) - 1

The ratio of PHASE Clock Freq. to SERVO Clock Freq. must be an integer. On the 16-Axis MACRO Station, MI998 should always be set to 0 so the servo clock frequency is equal to the phase clock frequency.

ABSOLUTE POWER ON ONLINE COMMANDS

$$*

Function: Read motor absolute positions

Scope: Coordinate system specific

Syntax: **$$***

The **$$*** command causes PMAC to perform a read of the absolute positions for all motors in the addressed coordinate system that require an absolute position read (Ixx10 > 0), as defined by Ixx10 and Ixx95 for the motor. This command performs the same actions in reading the absolute position data that are normally performed during the board's power-up/reset cycle if Ixx80 bit 2 is set to the default of 0.

The action of this command is equivalent to that of a motor-specific **$*** command to each motor in the coordinate system. Refer to the **$*** command description for the exact actions of this command.

$*

Function: Read motor absolute position

Scope: Motor specific

Syntax: **$***

The **$*** command causes PMAC to perform a read of the absolute position for the addressed motor, as defined by Ixx10 and Ixx95 for the motor. It performs the same actions that are normally performed during the board's power-up/reset cycle.

The **$*** command performs the following actions on the addressed motor:

The motor is killed (servo loop open, zero command, amplifier disabled).

If the motor is set up for local hardware encoder position capture by input flags, with bit 0 of Ixx97 set to 0 to specify hardware capture and bit 18 of Ixx24 set to 0 to specify local not MACRO flag operation (these are default values), the hardware encoder counter for the same channel as the flag register specified by Ixx25 is set to 0 (e.g. if Ixx25 specifies flags from channel 3, then encoder counter 3 is cleared).

The motor home complete status bit is cleared.

The motor position bias register, which contains the difference between motor and axis zero positions, is set to 0.

If Ixx10 for the motor is greater than 0, specifying an absolute position read, the sensor is read as specified by Ixx10 and Ixx95 to set the motor actual position. The actual position value is set to the sum of the sensor value and the Ixx26 home offset parameter. Unless the read is determined to be unsuccessful, the motor home complete status bit is set to 1.

If Ixx10 for the motor is set to 0, specifying no absolute position read, the motor actual position register is set to 0.

Because the motor is killed, the actual position value is automatically copied into the command position register for the motor.

There are several things to note with regard to this command:

The motor is left in the killed state at the end of execution of this command. To enable the motor, a **$** command should be used if this is a PMAC-commutated motor and a phase reference must be established; otherwise a **J/**, **A**, or **<CTRL-A>** command should be used to enable the motor and close the loop.

If bit 2 of Ixx80 is set to 1, PMAC will not attempt an absolute position read at the board power-on/reset; in this case, the **$*** command must be used to establish the absolute sensor. If bit 2 of Ixx80 is set to 0 (the default), PMAC will attempt an absolute position read at the board power-on/reset.

With Ixx10 set to 0, the action of **$*** is very similar to that of the **HOMEZ** command. There are a few significant differences, however:

$* always kills the motor; **HOMEZ** leaves the servo in its existing state.

$* sets the present actual position to be zero; **HOMEZ** sets the present commanded position to be zero.

$* zeros the hardware encoder counter in most cases; **HOMEZ** does not change the hardware encoder counter.

All of the motors in a single coordinate system that require an absolute position read can be commanded at once with the coordinate-system specific **$$*** command.

See Also:
I-variables Ixx03, Ixx10, Ixx24, Ixx25, Ixx80, Ixx81
On-line commands **$**, **$$$**, **$$***, **HOMEZ**

APPENDIX A

Fiber Optic Cable Ordering Information

CABFBR-1	20 cm terminated glass optical fiber cable	3A3-A042P2-OPT
CABFBR-2	1.5m (5ft) terminated glass optical fiber cable	3A3-0042P2-OPT
CABFBR-3	5m (15ft) terminated glass optical fiber cable	3B3-0042P2-OPT
CABFBR-4	8m (28ft) terminated glass optical fiber cable	3C3-0042P2-OPT
CABFBR-5	Custom length terminated glass optical fiber cable (per meter)	3D3-0042P2-OPT

Mating Connector and Cable Kits

Geo Drives do not come with any connectors for the AC input, 24VDC input, Regen Resistor Output, or Motor Outputs. The user should purchase the appropriate Mating Connector and Cable Kits from Delta Tau Data Systems, Inc., or they can obtain the connectors and pins from other sources.

Cable sets can be purchased directly from Delta Tau to make the wiring of the system easier. Available cable kits (CABKITxx) are listed below.

For those manufacturing their own cable sets, the table below provides Connector Kits to use with each drive. Connector Kits (CONKITxx) include the MOLEX connectors and pins for the AC input, 24VDC power supply and the motor outputs.

Note:

Due to the variety and wide availability of D-type connectors and back shells for the encoders, CABKITs and CONKITs do not provide these parts.

For correct installation of the connector kit to the Cables, proper crimping tools are required. Check the Molex website to find the correct tool for the appropriate pin.

Cable kits have terminated cables on the drive end and flying leads on the other.

Mating Connector and Cable Kits

Connector Kit	Description
CONKIT1A	Mating Connector Kit for dual axis drives up to 5-amp continuous rating (Gxx012xx, Gxx032xx, Gxx052xx, GxL102xx): Includes Molex Connectors kits for two motors, AC input connection, and 24V power connection. Requires Molex Crimp tools for proper installation.
CABKIT1B	Includes Molex mating connectors pre-crimped for dual axis drives up to 5-amp continuous rated (Gxx012xx, Gxx032xx, Gxx052xx,GxL102). • 3 ft. AC Input Cable • 3 ft. 24VDC Power Cable • 10 ft. shielded Motor Cables
CONKIT1C	Mating Connector Kit for single axis drives up to 5-amp continuous rating (Gxx051xx): Includes Molex Connectors kits for two motors, AC input connection, and 24V power connection. Requires Molex Crimp tools for proper installation.

CABKIT1C	Includes Molex mating connectors pre-crimped for single axis drives up to 5-amp continuous rated (Gxx051xx). • 3 ft. AC Input Cable • 3 ft. 24VDC Power Cable • 10 ft. shielded Motor Cables
CONKIT2A	Mating Connector Kit for dual axis drives up to 15 amp continuous rating (GxH102xx, Gxx152xx): Includes Molex Connectors kits for: two motors, AC input connection, and 24V power connection. Requires Molex Crimp Tools for proper installation.
CABKIT2B	Includes Molex mating connectors pre-crimped for dual axis drives (double width) up to 15 amp continuous rated (GxH102xx, Gxx152xx). • 3 ft. AC Input Cable • 3 ft. 24VDC Power Cable • 10 ft. shielded Motor Cables
CONKIT2C	Mating Connector Kit for single axis drives, up to 15 amp continuous rating (Gxx101xx, Gxx151xx): Includes Molex Connectors kits for one motor, AC input connection, and 24V power connection. Requires Molex Crimp tools for proper installation.
CABKIT2D	Includes Molex mating connectors pre-crimped for single axis drives up to 15 amp continuous rated (Gxx101xx, Gxx151xx). • 3 ft. AC Input Cable • 3 ft. 24VDC Power Cable 10 ft. shielded Motor Cables
CONKIT4A	Mating Connector Kit for single axis drives up to 30 amp continuous rating (Gxx201xx, Gxx301xx): Includes Molex Connectors kits for one motor (4pin), AC input connection (4 pin), and 24V power connection. Requires Molex Crimp Tools for proper installation.
CABKIT4B	Includes Molex mating connectors pre-crimped for single axis drives up to 30 amp continuous rated (Gxx201xx, Gxx301xx). • 3 ft. AC Input Cable (4pin) • 3 ft. 24VDC Power Cable 10 ft. shielded Motor Cables (4 pin)
G14AWG	Motor Power Cables. Extended cable length. Per foot per cable for the CABKITs. Customer must specify length. For drives up to 15 amp continuous rating.(Gxx051xx, Gxx101xx, Gxx151xx, Gxx012xx, Gxx032xx, Gxx052xx, Gxx102xx, Gxx152xx)

Connector and pins Part numbers

CONKIT1A

Connector	D/T part number	D/T part number individuals	Molex part number
24VDC & Shunt Resistor	200-000F02-HSG	Housing: 014-000F02-HSG Pins: 014-043375-001	44441-2002 43375-0001
Motor (x2) 3pins	200-000F03-HSG	Housing: 014-000F03-HSG Pins: 014-043375-001	44441-2003 43375-0001
AC Input	200-H00F03-049	Housing: 014-H00F03-049 Pins: 014-042815-0031	42816-0312 42815-0031

CONKIT1C

Connector	D/T part number	D/T part number individuals	Molex part number
24VDC & Shunt Resistor	200-000F02-HSG	Housing: 014-000F02-HSG Pins: 014-043375-001	44441-2002 43375-0001
Motor (x1) 3pins	200-000F03-HSG	Housing: 014-000F03-HSG Pins: 014-043375-001	44441-2003 43375-0001
AC Input	200-H00F03-049	Housing: 014-H00F03-049 Pins: 014-042815-0031	42816-0312 42815-0031

CONKIT2A

Connector	D/T part number	D/T part number individuals	Molex part number
24VDC & Shunt Resistor	200-000F02-HSG	Housing: 014-000F02-HSG Pins: 014-043375-001	44441-2002 43375-0001
Motor (x2) 3pins	200-H00F03-049	Housing: 014-H00F03-049 Pins: 014-042815-0031	42816-0312 42815-0031
AC Input	200-H00F03-049	Housing: 014-H00F03-049 Pins: 014-042815-0031	42816-0312 42815-0031

CONKIT2C

Connector	D/T part number	D/T part number individuals	Molex part number
24VDC & Shunt Resistor	200-000F02-HSG	Housing: 014-000F02-HSG Pins: 014-043375-001	44441-2002 43375-0001
Motor (x1) 3pins	200-H00F03-049	Housing: 014-H00F03-049 Pins: 014-042815-0031	42816-0312 42815-0031
AC Input	200-H00F03-049	Housing: 014-H00F03-049 Pins: 014-042815-0031	42816-0312 42815-0031

CONKIT4A

Connector	**D/T part number**	**D/T part number individuals**	**Molex part number**
24VDC	200-000F02-HSG	Housing: 014-000F02-HSG Pins: 014-043375-001	44441-2002 43375-0001
Shunt Resistor	200-H00F03-049	Housing: 014-H00F03-049 Pins: 014-042815-0031	42816-0312 42815-0031
Motor (x1) 4pins	200-H00F04-049	Housing: 014-H00F04-049 Pins: 014-042815-0031	42816-0412 42815-0031
AC Input	200-H00F04-049	Housing: 014-H00F04-049 Pins: 014-042815-0031	42816-0412 42815-0031

Cable Drawings

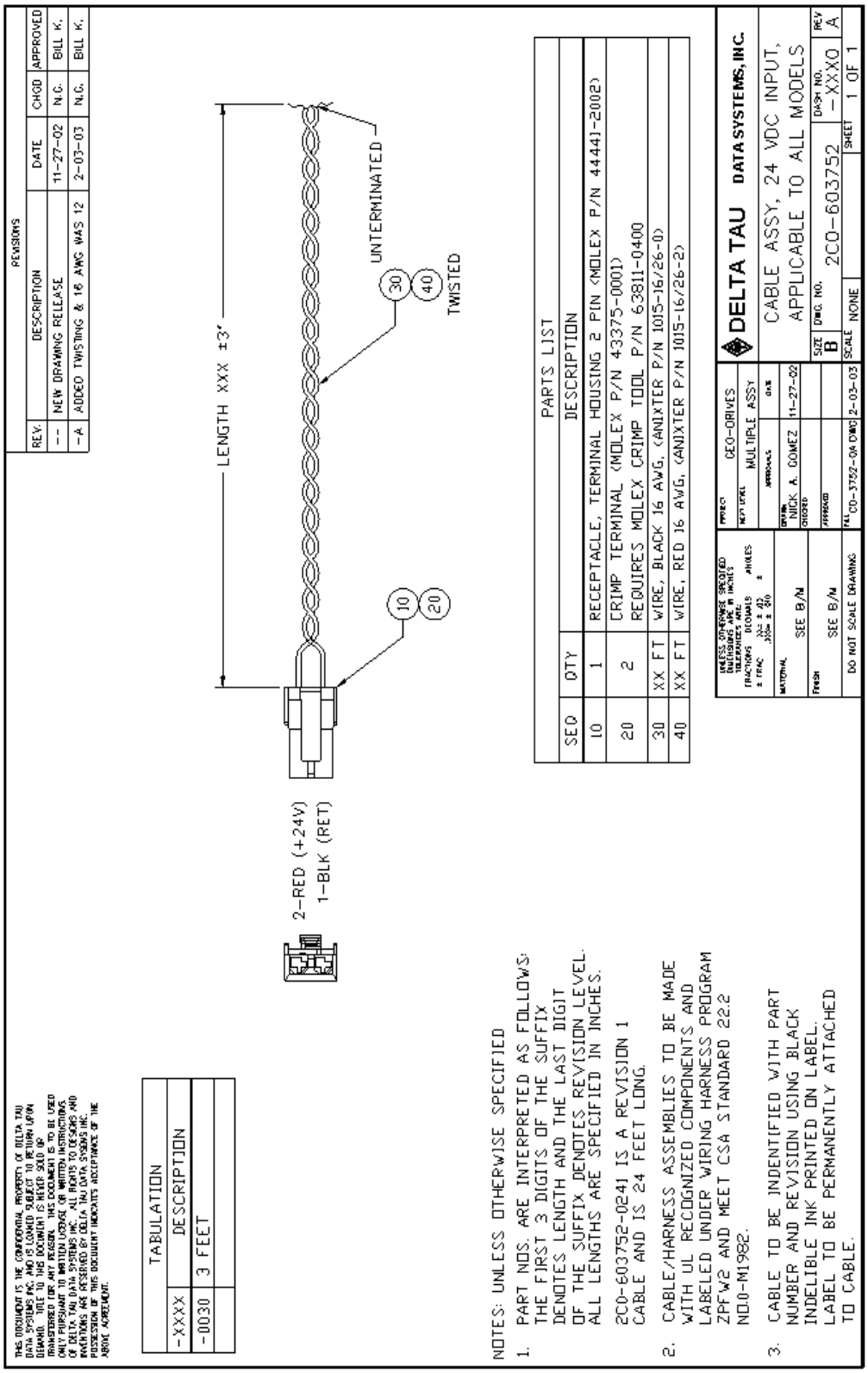

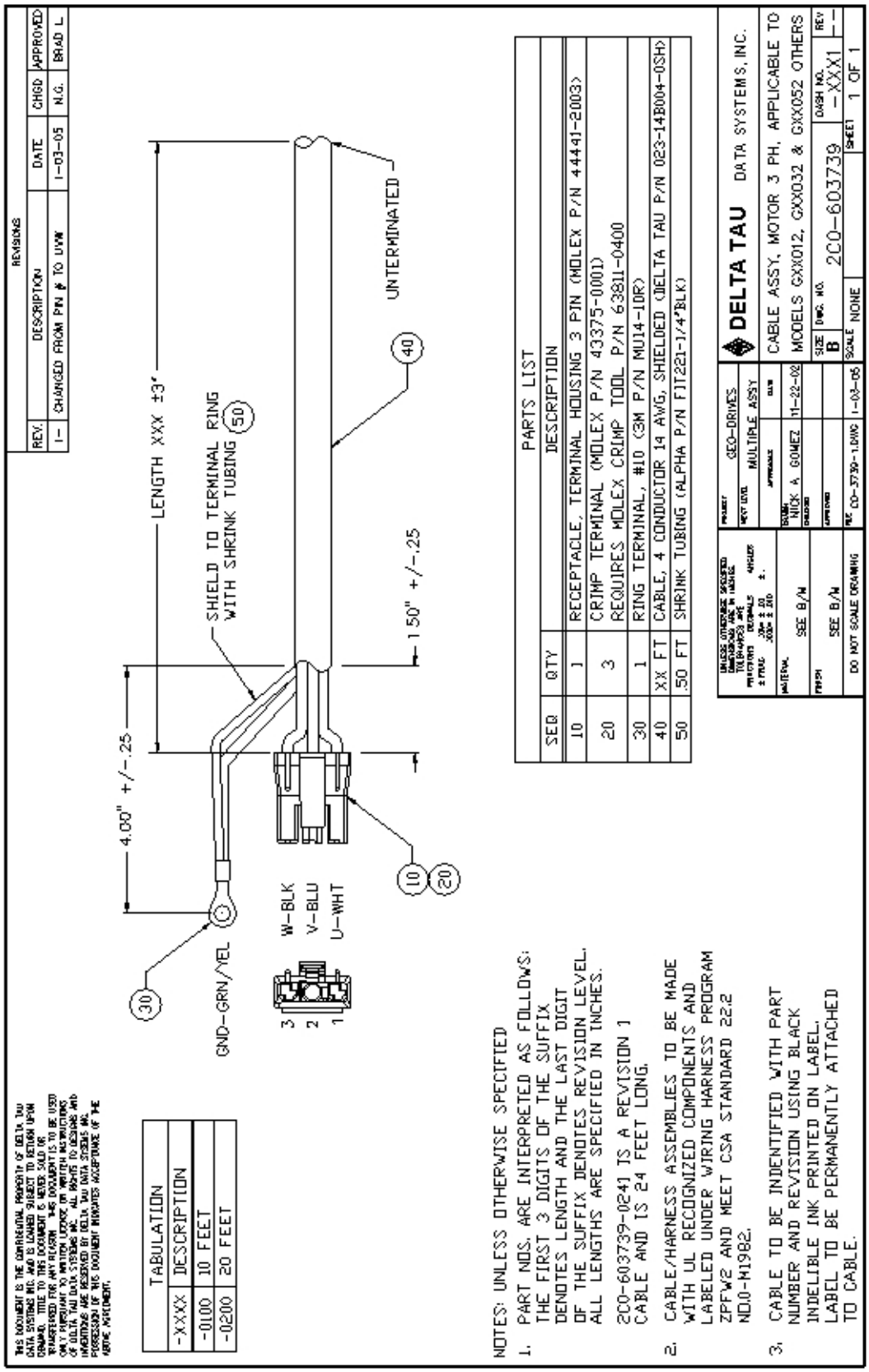
REVISIONS
REV. DESCRIPTION DATE CHGD APPROVED
1- CHANGED FROM PIN # TO UVW 1-03-05 N.G. BRAD L
LENGTH XXX ±3"
SHIELD TO TERMINAL RING WITH SHRINK TUBING
UNTERMINATED
4.00" +/-.25
1.50" +/-.25
GND-GRN/YEL
W-BLK
V-BLU
U-WHT
3
2
1
30
50
40
10
20
TABULATION
-XXXX DESCRIPTION
-0100 10 FEET
-0200 20 FEET
PARTS LIST
SEQ QTY DESCRIPTION
10 1 RECEPTACLE, TERMINAL HOUSING 3 PIN (MOLEX P/N 44441-2003)
20 3 CRIMP TERMINAL (MOLEX P/N 43375-0001) REQUIRES MOLEX CRIMP TOOL P/N 63811-0400
30 1 RING TERMINAL, #10 (3M P/N MU14-10R)
40 XX FT CABLE, 4 CONDUCTOR 14 AWG, SHIELDED (DELTA TAU P/N 023-14B004-0SH)
50 .50 FT SHRINK TUBING (ALPHA P/N FIT221-1/4"BLK)
NOTES: UNLESS OTHERWISE SPECIFIED
1. PART NOS. ARE INTERPRETED AS FOLLOWS: THE FIRST 3 DIGITS OF THE SUFFIX DENOTES LENGTH AND THE LAST DIGIT OF THE SUFFIX DENOTES REVISION LEVEL. ALL LENGTHS ARE SPECIFIED IN INCHES. 2C0-603739-0241 IS A REVISION 1 CABLE AND IS 24 FEET LONG.
2. CABLE/HARNESS ASSEMBLIES TO BE MADE WITH UL RECOGNIZED COMPONENTS AND LABELED UNDER WIRING HARNESS PROGRAM ZPFW2 AND MEET CSA STANDARD 22.2 NO.0-M1982.
3. CABLE TO BE INDENTIFIED WITH PART NUMBER AND REVISION USING BLACK INDELIBLE INK PRINTED ON LABEL. LABEL TO BE PERMANENTLY ATTACHED TO CABLE.
DELTA TAU DATA SYSTEMS, INC.
CABLE ASSY, MOTOR 3 PH, APPLICABLE TO MODELS GXX012, GXX032 & GXX052 OTHERS
2C0-603739 -XXX1
SIZE B
SCALE NONE
SHEET 1 OF 1
DO NOT SCALE DRAWING

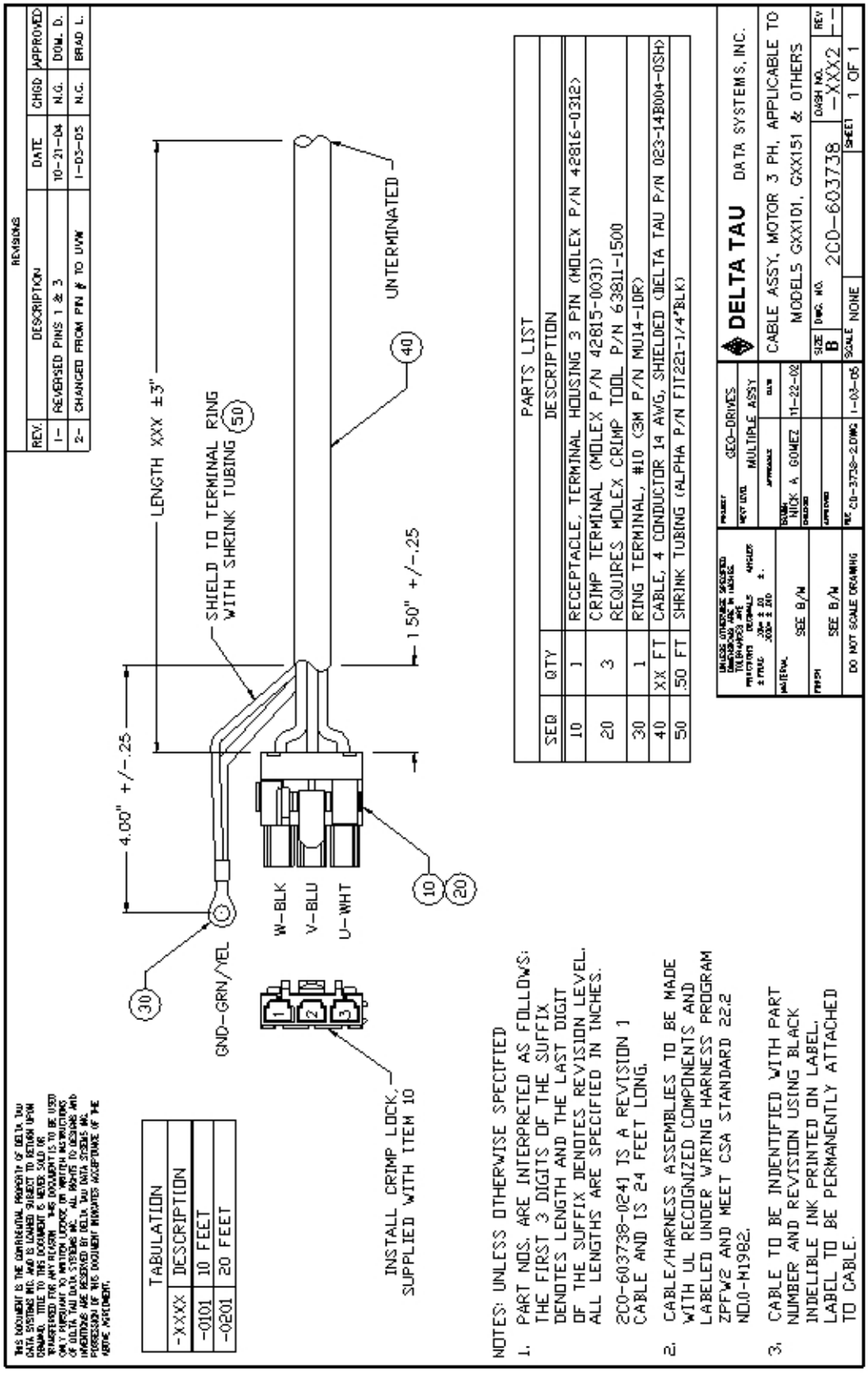
REVISIONS
REV. DESCRIPTION DATE CHGD APPROVED
1- REVERSED PINS 1 & 3 10-21-04 N.G. DOW. D.
2- CHANGED FROM PIN # TO UVW 1-03-05 N.C. BRAD L.
LENGTH XXX ±3"
SHIELD TO TERMINAL RING
WITH SHRINK TUBING
50
UNTERMINATED
40
4.00" +/-.25
1.50" +/-.25
30
GND-GRN/YEL
W-BLK
V-BLU
U-WHT
10
20
1
2
3
INSTALL CRIMP LOCK,
SUPPLIED WITH ITEM 10
TABULATION
-XXXX DESCRIPTION
-0101 10 FEET
-0201 20 FEET
PARTS LIST
SEQ QTY DESCRIPTION
10 1 RECEPTACLE, TERMINAL HOUSING 3 PIN (MOLEX P/N 42816-0312)
20 3 CRIMP TERMINAL (MOLEX P/N 42815-0031)
REQUIRES MOLEX CRIMP TOOL P/N 63811-1500
30 1 RING TERMINAL, #10 (3M P/N MU14-10R)
40 XX FT CABLE, 4 CONDUCTOR 14 AWG, SHIELDED (DELTA TAU P/N 023-14B004-0SH)
50 .50 FT SHRINK TUBING (ALPHA P/N FIT221-1/4"BLK)
NOTES: UNLESS OTHERWISE SPECIFIED
1. PART NOS. ARE INTERPRETED AS FOLLOWS:
THE FIRST 3 DIGITS OF THE SUFFIX
DENOTES LENGTH AND THE LAST DIGIT
OF THE SUFFIX DENOTES REVISION LEVEL.
ALL LENGTHS ARE SPECIFIED IN INCHES.
2CO-603738-0241 IS A REVISION 1
CABLE AND IS 24 FEET LONG.
2. CABLE/HARNESS ASSEMBLIES TO BE MADE
WITH UL RECOGNIZED COMPONENTS AND
LABELED UNDER WIRING HARNESS PROGRAM
ZPFW2 AND MEET CSA STANDARD 22.2
NO.0-M1982.
3. CABLE TO BE INDENTIFIED WITH PART
NUMBER AND REVISION USING BLACK
INDELIBLE INK PRINTED ON LABEL.
LABEL TO BE PERMANENTLY ATTACHED
TO CABLE.
DELTA TAU DATA SYSTEMS, INC.
GEO-DRIVES
MULTIPLE ASSY
NICK A. GOMEZ 11-22-02
CABLE ASSY, MOTOR 3 PH, APPLICABLE TO
MODELS GXX101, GXX151 & OTHERS
SEE B/W
SEE B/W
B
2CO-603738
-XXX2
SHEET 1 OF 1
DO NOT SCALE DRAWING
2CO-3738-2.DWG 1-03-05
NONE

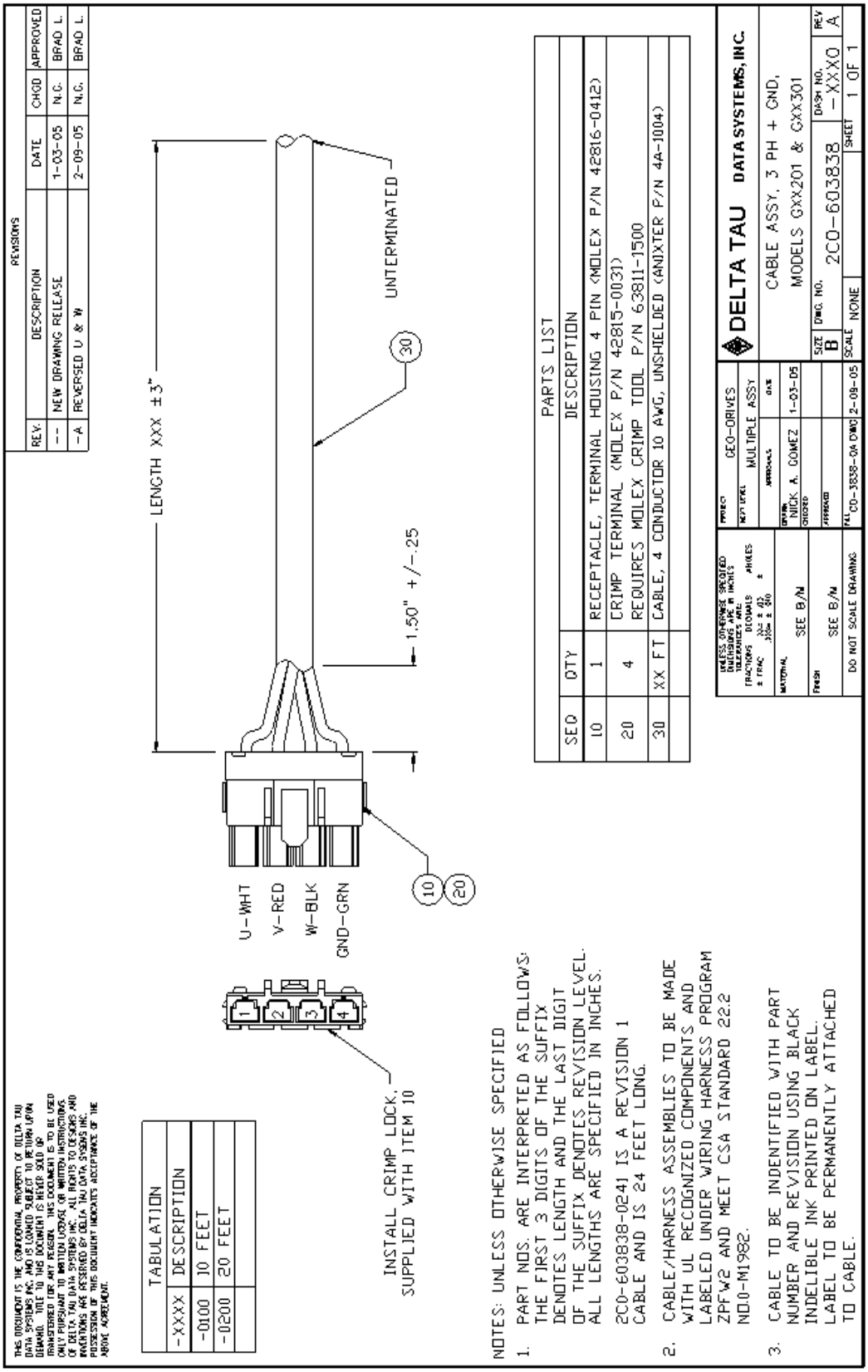
REVISIONS
REV. DESCRIPTION DATE CHKD APPROVED
-- NEW DRAWING RELEASE 1-03-05 N.C. BRAD L.
-A REVERSED U & W 2-09-05 N.C. BRAD L.
LENGTH XXX ±3"
UNTERMINATED
1.50" +/-.25
U-WHT
V-RED
W-BLK
GND-GRN
INSTALL CRIMP LOCK, SUPPLIED WITH ITEM 10
TABULATION
-XXXX DESCRIPTION
-0100 10 FEET
-0200 20 FEET
PARTS LIST
SEQ QTY DESCRIPTION
10 1 RECEPTACLE, TERMINAL HOUSING 4 PIN (MOLEX P/N 42816-0412)
20 4 CRIMP TERMINAL (MOLEX P/N 42815-0031) REQUIRES MOLEX CRIMP TOOL P/N 63811-1500
30 XX FT CABLE, 4 CONDUCTOR 10 AWG, UNSHIELDED (ANIXTER P/N 4A-1004)
NOTES: UNLESS OTHERWISE SPECIFIED
1. PART NOS. ARE INTERPRETED AS FOLLOWS: THE FIRST 3 DIGITS OF THE SUFFIX DENOTES LENGTH AND THE LAST DIGIT OF THE SUFFIX DENOTES REVISION LEVEL. ALL LENGTHS ARE SPECIFIED IN INCHES.
2CO-603838-0241 IS A REVISION 1 CABLE AND IS 24 FEET LONG.
2. CABLE/HARNESS ASSEMBLIES TO BE MADE WITH UL RECOGNIZED COMPONENTS AND LABELED UNDER WIRING HARNESS PROGRAM ZPFW2 AND MEET CSA STANDARD 22.2 NO.0-M1982.
3. CABLE TO BE INDENTIFIED WITH PART NUMBER AND REVISION USING BLACK INDELIBLE INK PRINTED ON LABEL. LABEL TO BE PERMANENTLY ATTACHED TO CABLE.
DELTA TAU DATA SYSTEMS, INC.
CABLE ASSY, 3 PH + GND, MODELS GXX201 & GXX301
2CO-603838 -XXXO
SIZE B
SCALE NONE
SHEET 1 OF 1
DO NOT SCALE DRAWING
NICK A. GOMEZ 1-03-05
SEE B/M
GEO-DRIVES
MULTIPLE ASSY

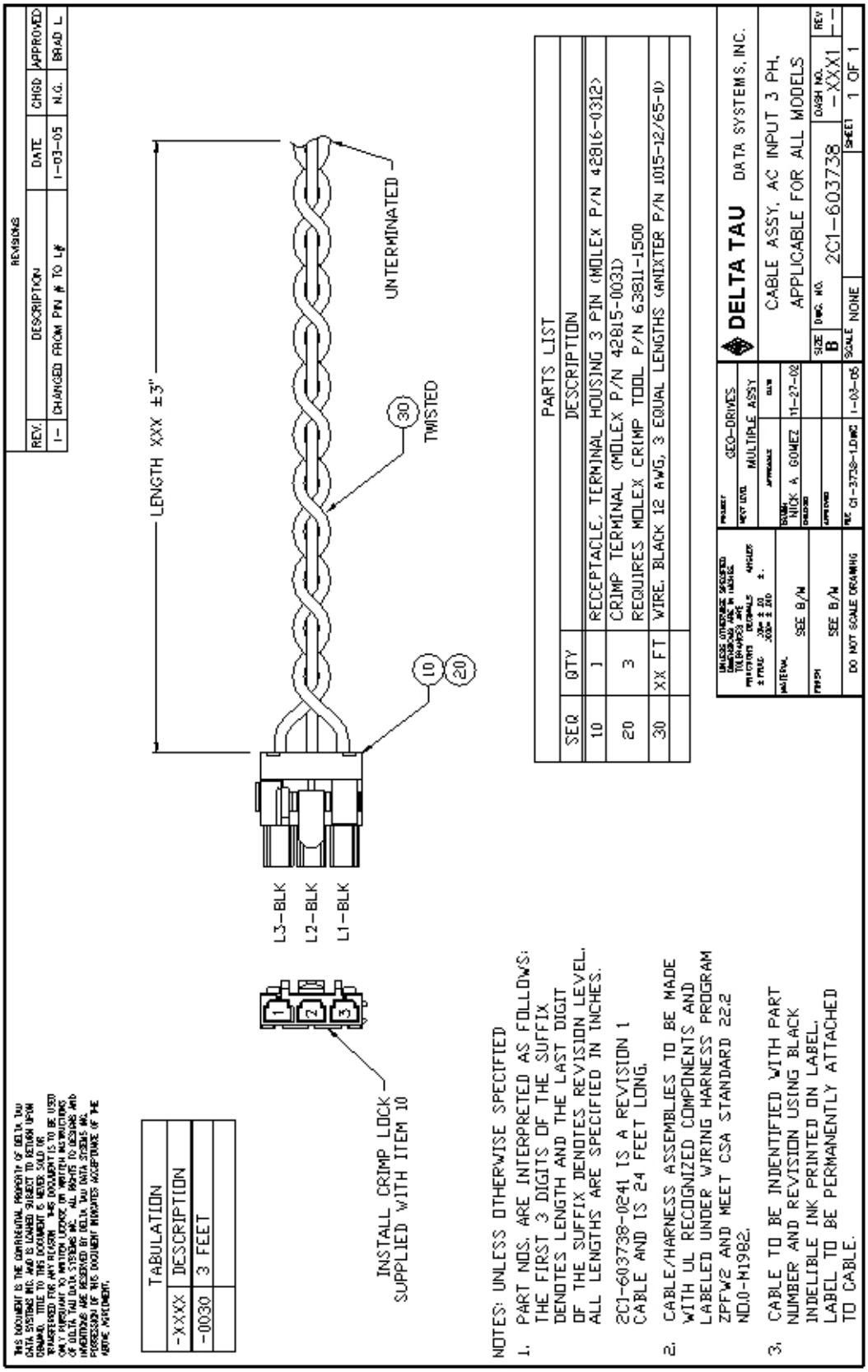
REVISIONS
REV. DESCRIPTION DATE CHGD APPROVED
1- CHANGED FROM PIN # TO L# 1-03-05 N.G. BRAD L
LENGTH XXX ±3"
UNTERMINATED
30
TWISTED
10
20
L3-BLK
L2-BLK
L1-BLK
1
2
3
INSTALL CRIMP LOCK
SUPPLIED WITH ITEM 10
PARTS LIST
SEQ QTY DESCRIPTION
10 1 RECEPTACLE, TERMINAL HOUSING 3 PIN (MOLEX P/N 42816-0312)
20 3 CRIMP TERMINAL (MOLEX P/N 42815-0031)
REQUIRES MOLEX CRIMP TOOL P/N 63811-1500
30 XX FT WIRE, BLACK 12 AWG, 3 EQUAL LENGTHS (AMIXTER P/N 1015-12/65-0)
TABULATION
-XXXX DESCRIPTION
-0030 3 FEET
NOTES: UNLESS OTHERWISE SPECIFIED
1. PART NOS. ARE INTERPRETED AS FOLLOWS:
THE FIRST 3 DIGITS OF THE SUFFIX
DENOTES LENGTH AND THE LAST DIGIT
OF THE SUFFIX DENOTES REVISION LEVEL.
ALL LENGTHS ARE SPECIFIED IN INCHES.
2C1-603738-0241 IS A REVISION 1
CABLE AND IS 24 FEET LONG.
2. CABLE/HARNESS ASSEMBLIES TO BE MADE
WITH UL RECOGNIZED COMPONENTS AND
LABELED UNDER WIRING HARNESS PROGRAM
ZPFW2 AND MEET CSA STANDARD 22.2
NO.0-M1982.
3. CABLE TO BE INDENTIFIED WITH PART
NUMBER AND REVISION USING BLACK
INDELIBLE INK PRINTED ON LABEL.
LABEL TO BE PERMANENTLY ATTACHED
TO CABLE.
DO NOT SCALE DRAWING
MATERIAL SEE B/W
FINISH SEE B/W
PROJECT GEO-DRIVES
NEXT LEVEL MULTIPLE ASSY
NICK A GOMEZ 11-27-02
G1-3738-1.DWG 1-03-05
DELTA TAU DATA SYSTEMS, INC.
CABLE ASSY, AC INPUT 3 PH,
APPLICABLE FOR ALL MODELS
SIZE B DWG. NO. 2C1-603738 DASH NO. -XXX1 REV --
SCALE NONE SHEET 1 OF 1

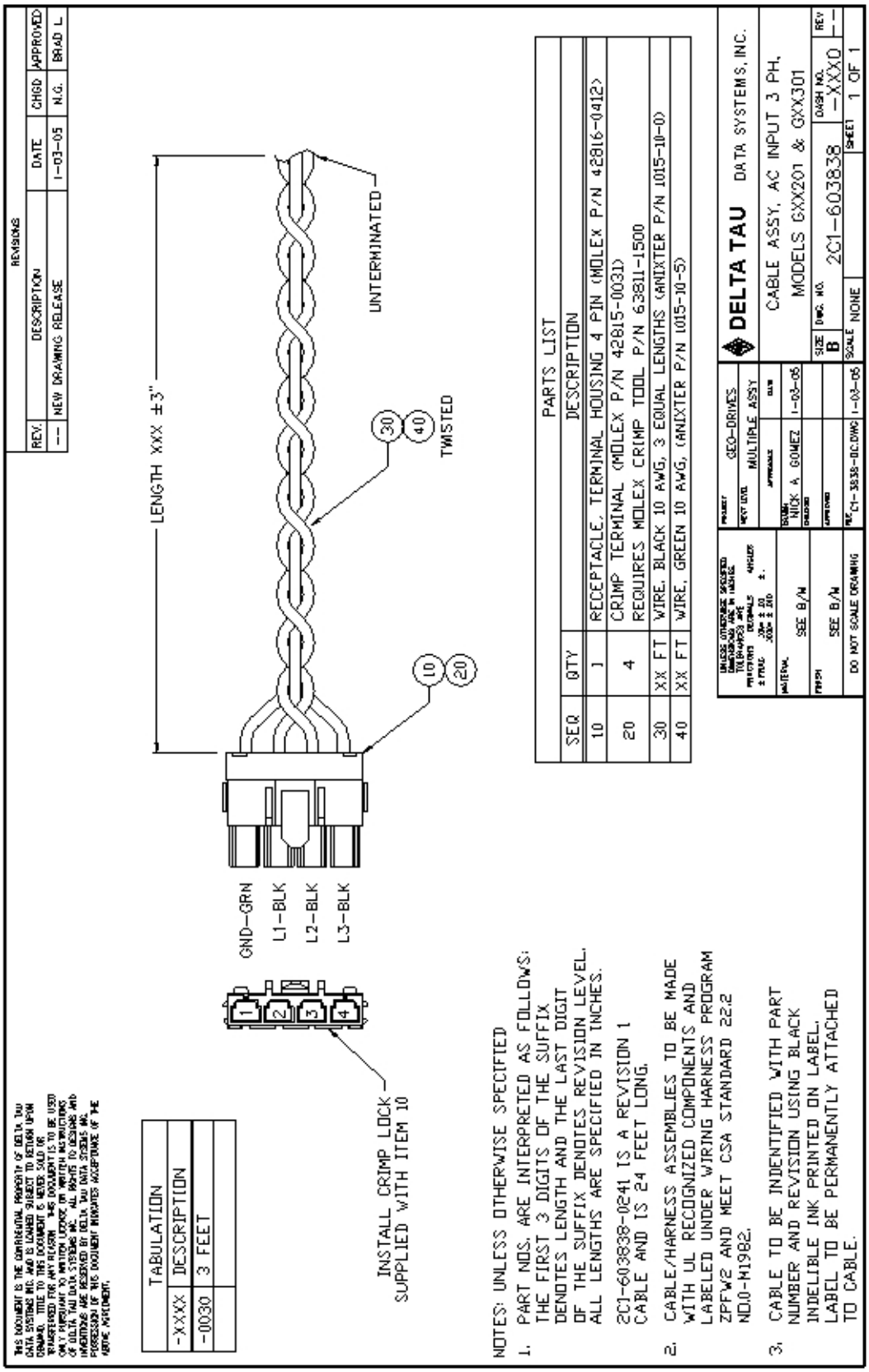
REVISIONS
REV. DESCRIPTION DATE CHGD APPROVED
-- NEW DRAWING RELEASE 1-03-05 N.G. BRAD L
LENGTH XXX ±3"
UNTERMINATED
TWISTED
30
40
10
20
GND-GRN
L1-BLK
L2-BLK
L3-BLK
1
2
3
4
INSTALL CRIMP LOCK SUPPLIED WITH ITEM 10
TABULATION
-XXXX DESCRIPTION
-0030 3 FEET
PARTS LIST
SEQ QTY DESCRIPTION
10 1 RECEPTACLE, TERMINAL HOUSING 4 PIN (MOLEX P/N 42816-0412)
20 4 CRIMP TERMINAL (MOLEX P/N 42815-0031)
REQUIRES MOLEX CRIMP TOOL P/N 63811-1500
30 XX FT WIRE, BLACK 10 AWG, 3 EQUAL LENGTHS (ANIXTER P/N 1015-10-0)
40 XX FT WIRE, GREEN 10 AWG, (ANIXTER P/N 1015-10-5)
NOTES: UNLESS OTHERWISE SPECIFIED
1. PART NOS. ARE INTERPRETED AS FOLLOWS: THE FIRST 3 DIGITS OF THE SUFFIX DENOTES LENGTH AND THE LAST DIGIT OF THE SUFFIX DENOTES REVISION LEVEL. ALL LENGTHS ARE SPECIFIED IN INCHES.
2C1-603838-0241 IS A REVISION 1 CABLE AND IS 24 FEET LONG.
2. CABLE/HARNESS ASSEMBLIES TO BE MADE WITH UL RECOGNIZED COMPONENTS AND LABELED UNDER WIRING HARNESS PROGRAM ZPFW2 AND MEET CSA STANDARD 22.2 NO.0-M1982.
3. CABLE TO BE INDENTIFIED WITH PART NUMBER AND REVISION USING BLACK INDELIBLE INK PRINTED ON LABEL. LABEL TO BE PERMANENTLY ATTACHED TO CABLE.
DO NOT SCALE DRAWING
MATERIAL SEE B/M
FINISH SEE B/M
PROJECT GEO-DRIVES
NEXT LEVEL MULTIPLE ASSY
DRAWN NICK A GOMEZ 1-03-05
SIZE B
SCALE NONE
DELTA TAU DATA SYSTEMS, INC.
CABLE ASSY, AC INPUT 3 PH, MODELS GXX201 & GXX301
DWG. NO. 2C1-603838
DASH NO. -XXX0
REV --
SHEET 1 OF 1

Regenerative Resistor: GAR78/48

Model	Description	1.5/4.5A	3/9A	5/10A	10/20A	15/30A	20/40A	30/60A
GAR78	300W 78 OHM regenerative resistor with Thermostat protection. Includes 18 inch wire cable, single or dual axis	√	√	√				
GAR48	300W 48 OHM regenerative resistor with Thermostat protection. Includes 18 inch wire cable, single or dual axis				√	√		
GAR48-3	300W 48 OHM regenerative resistor with Thermostat protection. Includes 18 inch wire cable.						√	√

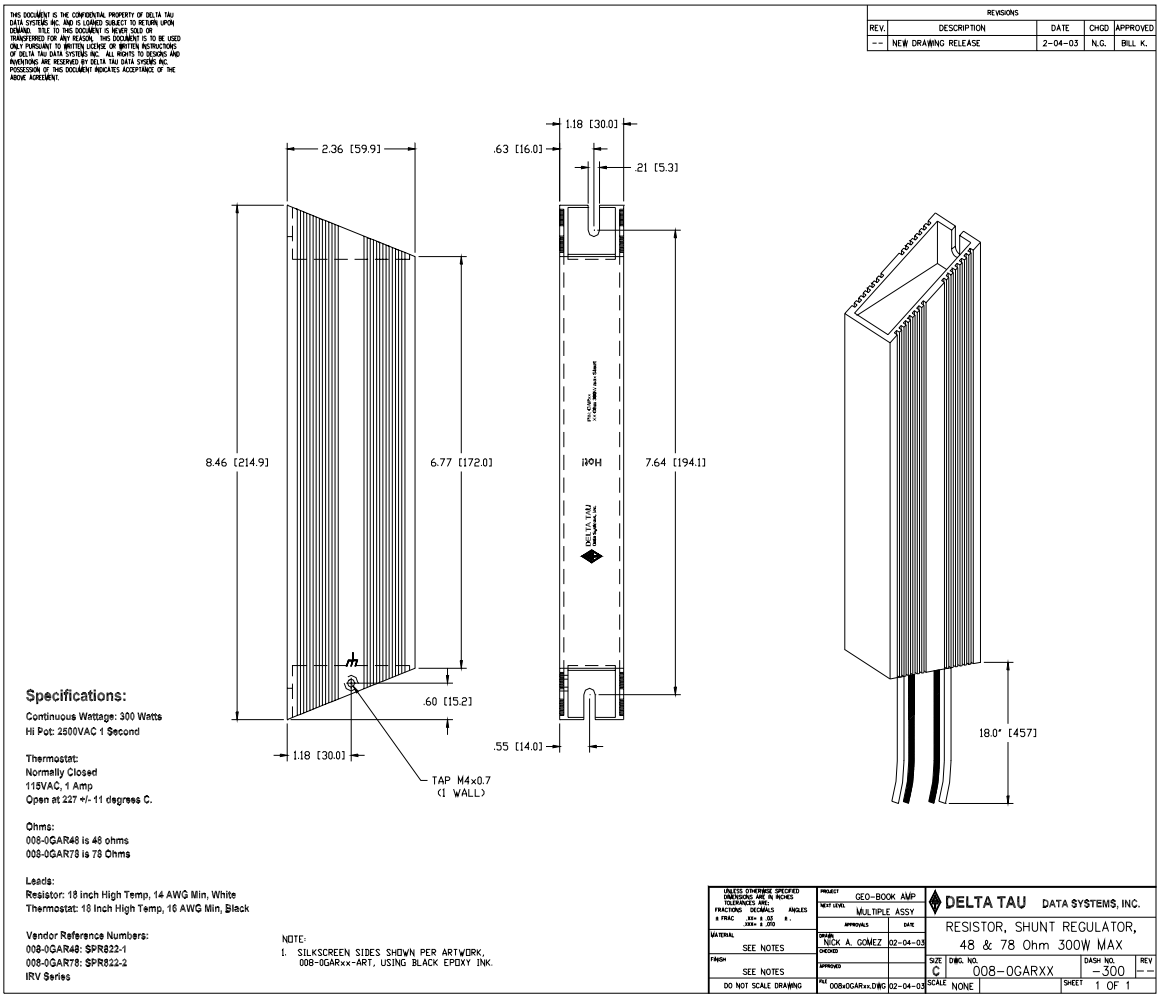

Type of Cable for Encoder Wiring

Low capacitance shielded twisted pair cable is ideal for wiring differential encoders. The better the shield wires, the better the noise immunity to the external equipment wiring. Wiring practice for shielded cables is not an exact science. Different applications will present different sources of noise, and experimentation may be required to achieve the desired results. Therefore, the following recommendations are based upon some experiences that we at Delta Tau Data Systems have acquired.

If possible, the best cabling to use is a double-shielded twisted pair cable. Typically, there are four pairs used in a differential encoder's wiring. The picture below shows how the wiring may be implemented for a typical differential sinusoidal encoder using double shielded twisted pair cable.

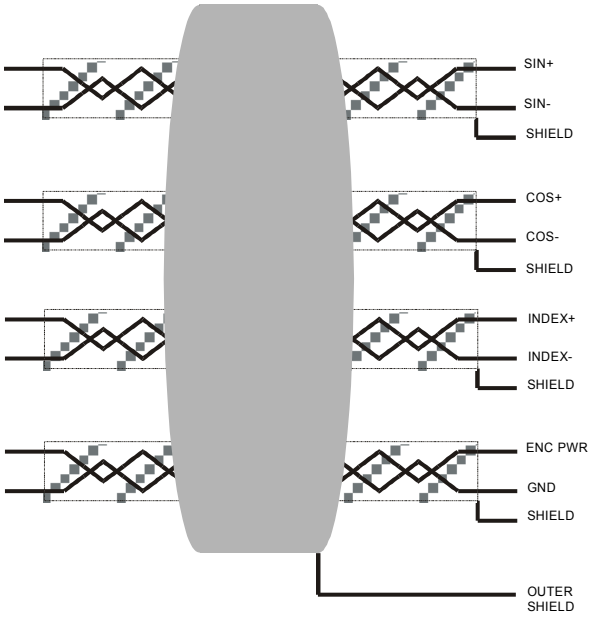

EXAMPLE OF DOUBLE SHIELDED
4 TWISTED PAIR CABLE

The shield wires should be tied to ground (Vcc return) at the interpolator end. It is acceptable to tie the shield wires together if there are not enough terminals available. Keep the exposed wire lengths as close as possible to the terminals on the interpolator.

Note:

It has been observed that there is an inconsistency in the shielding styles that are used by different encoder manufacturers.

Be sure to check pre-wired encoders to ensure that the shield wires are not connected at the encoder's side. Shield wires should be connected only on one side of the cable.

If the encoder has shield wires that are connected to the case ground of the encoder, ensure that the encoder and motor cases are sufficiently grounded. Do not connect the shield at the interpolator end.

If the encoder has pre-wired double shielded cable that has only the outer shield connected at the encoder, then connect only the inner shield wires to the interpolator. Be sure not to mix the shield interconnections.

One possible cable type for encoders is Belden 8164 or ALPHA 6318. This is a 4-pair individually shielded cable that has an overall shield. This double-shielded cable has a relatively low capacitance and is a 100Ω impedance cable.

Cables for single-ended encoders should be shielded for the best noise immunity. Single-ended encoder types cannot take advantage of the differential noise immunity that comes with twisted pair cables.

Note:

If noise is a problem in the application, careful attention must be given to the method of grounding that is used in the system. Amplifier and motor grounding can play a significant role in how noise is generated in a machine.

Noise may be reduced in a motor-based system by the use of inductors placed between the motor and the amplifier.

APPENDIX B

Schematics

X3: Discrete I/O

Channel #1 Flags

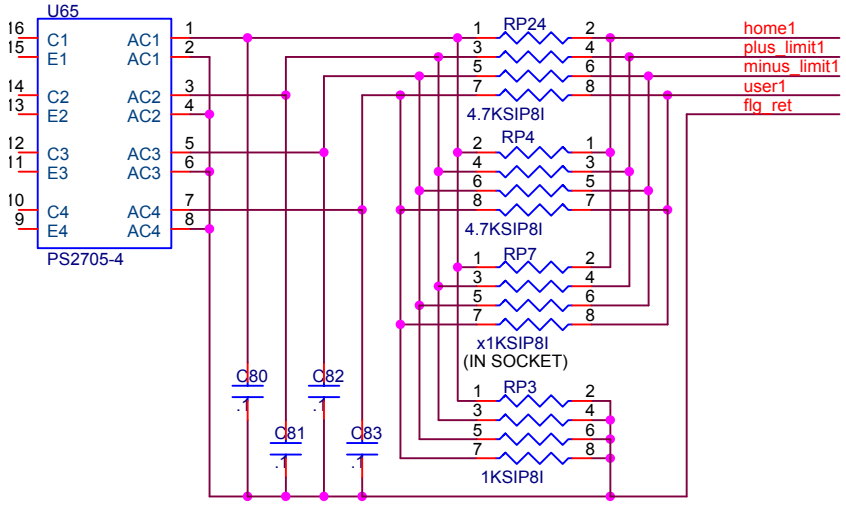

Channel #2 Flags

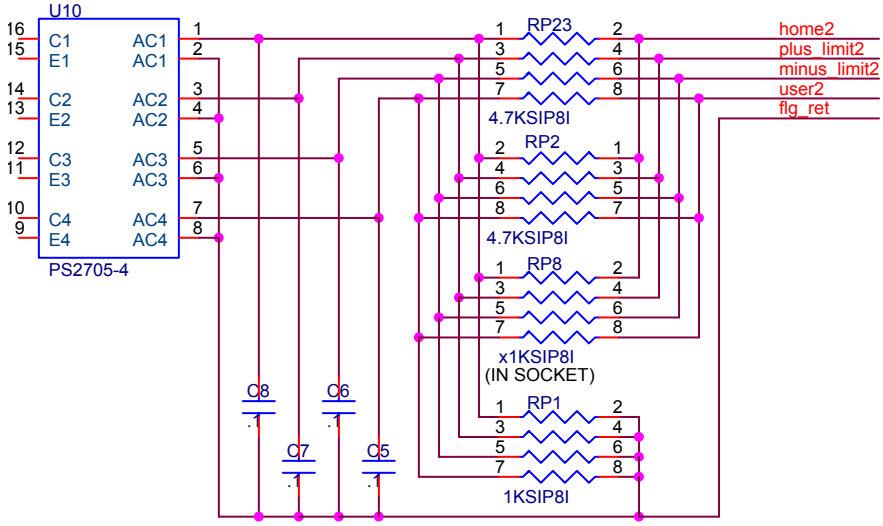

General Purpose Inputs 1-4

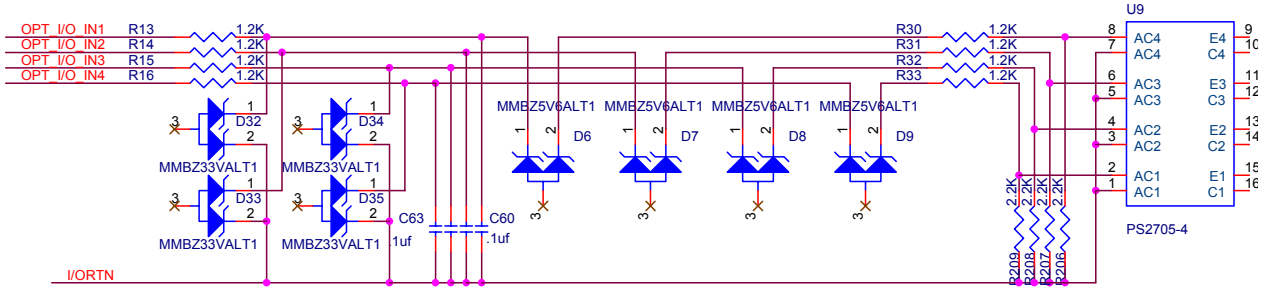

General Purpose Outputs 1-4

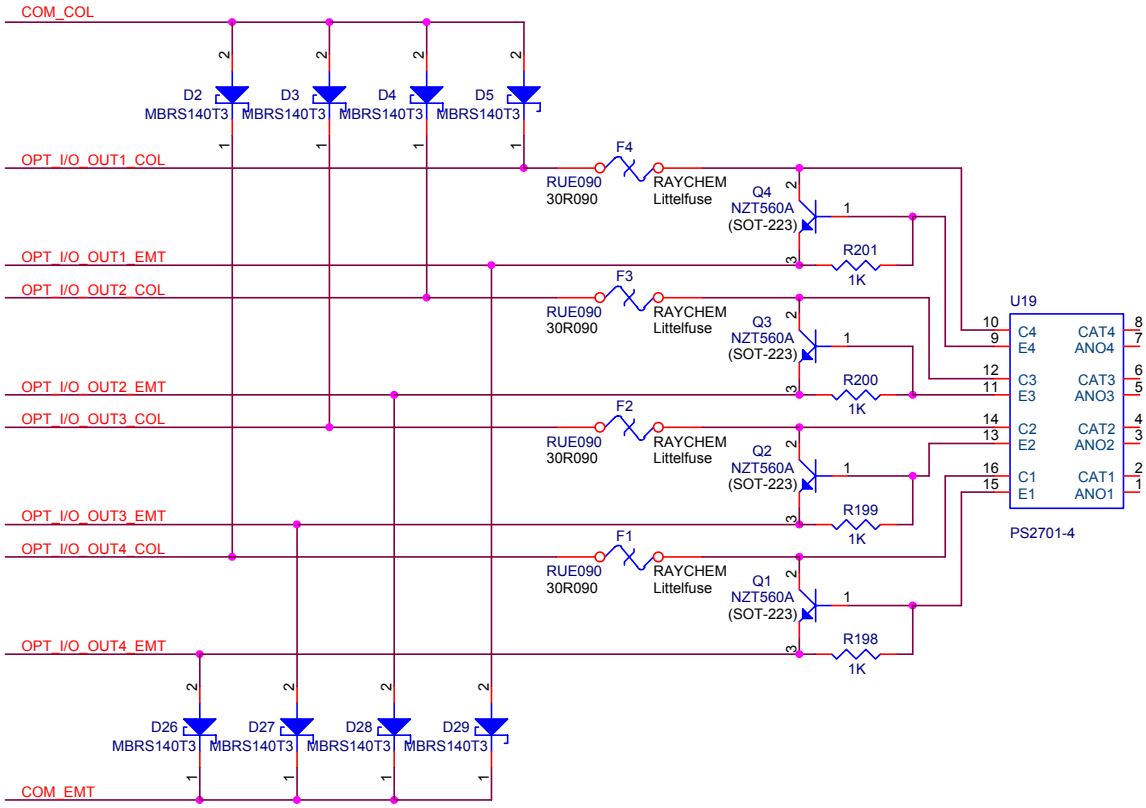

X6 and X7: Analog Inputs

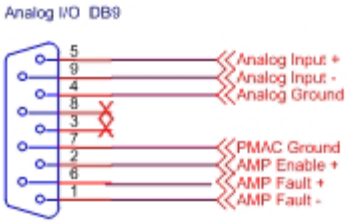

Notes:
1.) Analog Input is 20K-Ohm Differential +/- 5V, Single Ended is +/- 10Vdc
2.) Absolute maximum Input voltage is +/- 6V, Single Ended is +/- 12Vdc
3.) For Single Ended Inputs, wire reference to Analog Input -

Equivalent Circuits

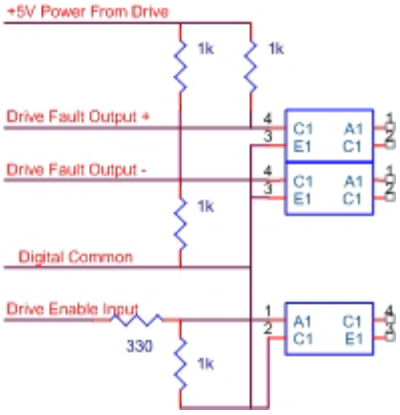

Analog Input 1

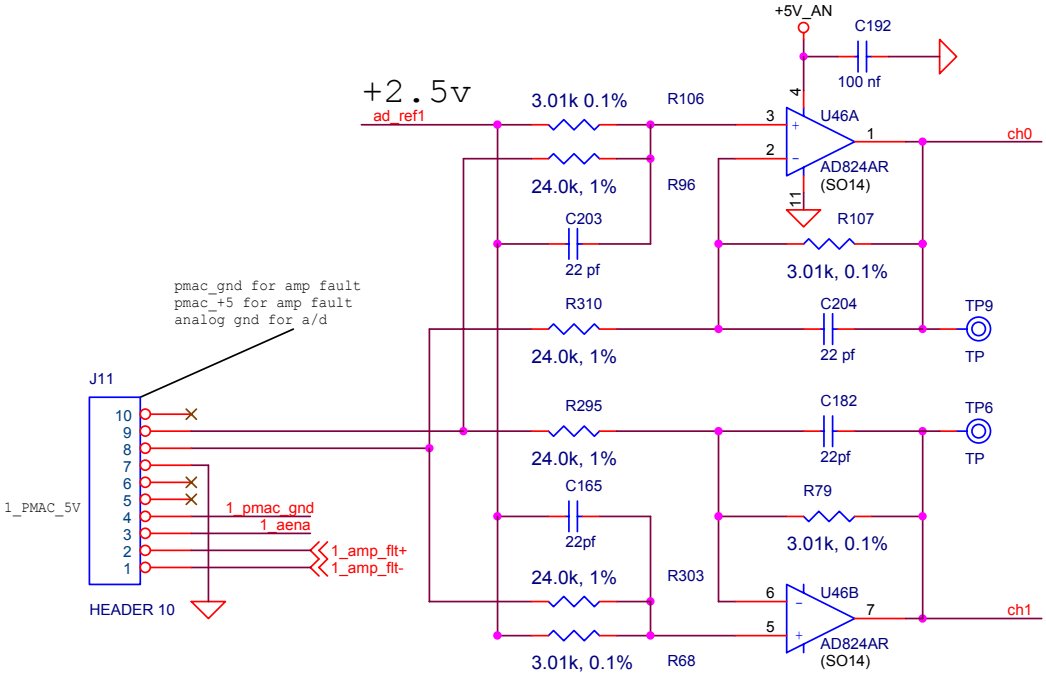

Analog Input 2

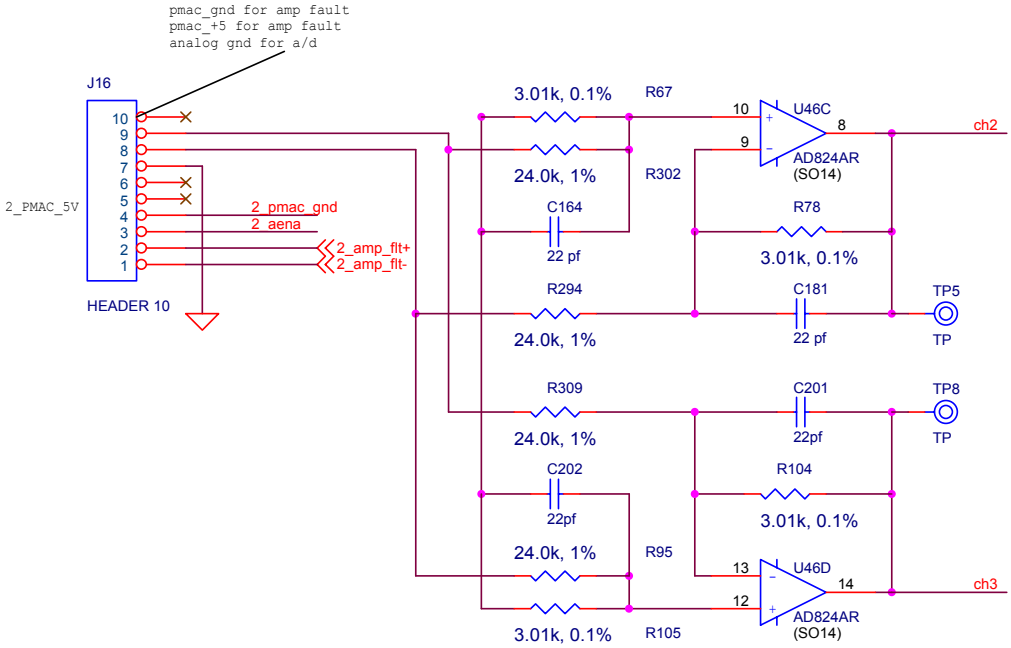

X8 and X9 Secondary Encoders (3 and 4)

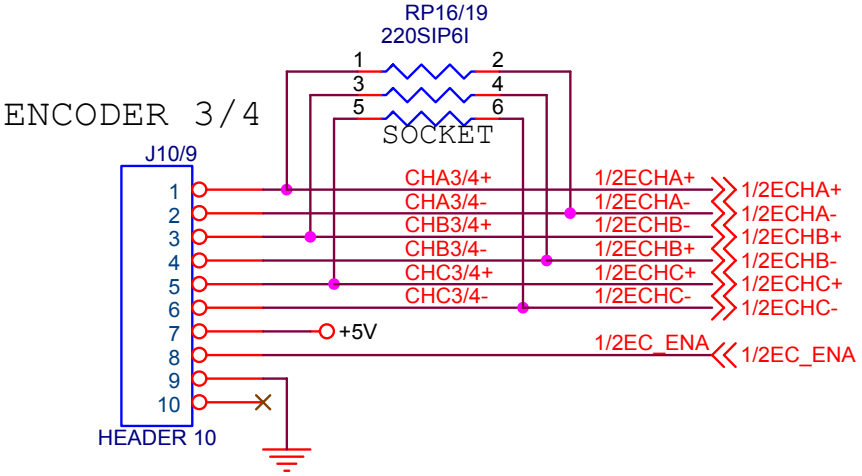

APPENDIX C

Communication to the Geo MACRO via the USB Port

The USB port on the Geo MACRO is actually a Serial to USB converter. The appropriate driver must be installed. Download the driver from the Delta Tau website, under downloads, Software.

Set up the HyperTerminal so that the Flow control is set to None. If Flow control is set to Hardware, Windows will lock up.

The step by step procedure to communicate to the Geo MACRO via the HyperTerminal is as follows:

1. Power on the PC with the Geo Macro powered off.
2. With the Geo Macro still powered off plug in the USB cable to both the Geo Macro and the PC.
3. Power ON the Amplifier
4. Launch a HyperTerminal session with the settings below.

Baud Rate:	38400
Data Bits:	8
Parity:	None
Stop Bits:	1
Flow control:	None

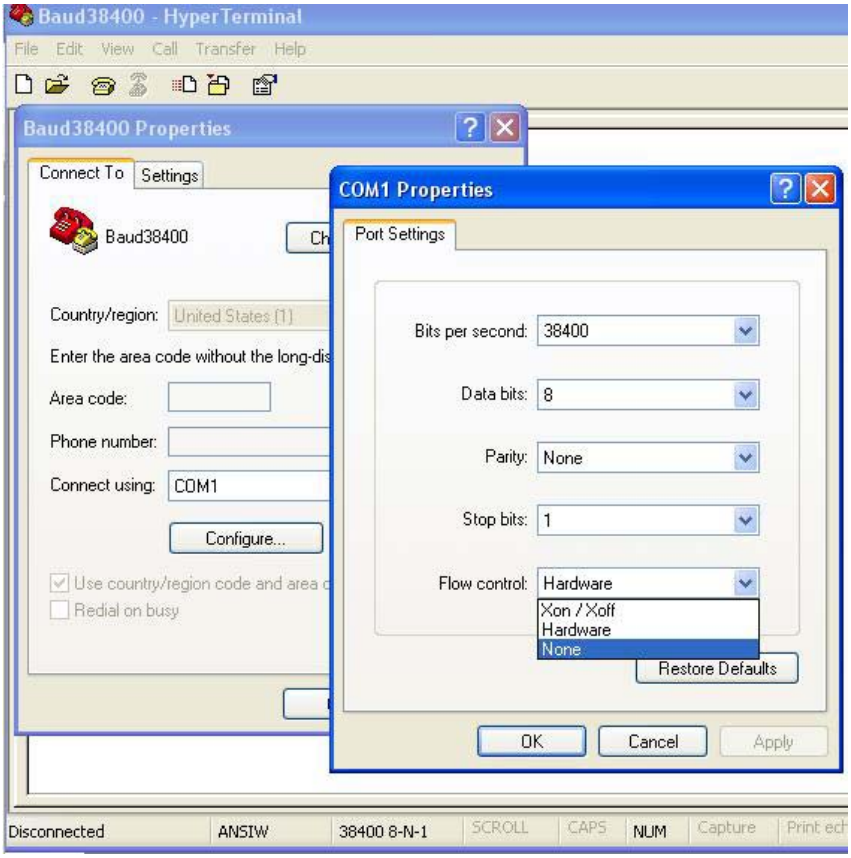

Note:

The USB port cannot handle hardware handshaking.

APPENDIX D

MACRO Flag Transfer Location

For proper servo operations, the Master Controller must process information in real time. For MACRO systems, this information is brought to the Master via Ixx25. For Turbo systems, the locations are at $3440, $3441, $3444, $3445, $3448, $3449, $344C, $344D, etc. The following tables list the data that is transferred through these locations.

NodeCntrlStatus: (Sent by Slave - Located in gate array except for bits 0-7)
(Turbo at: X:$3440 .. X:$347F / X-portion of Flag Address)

Bit	Function
0	Not Used
1	Not Used
2	Not Used
3	Not Used
4	Not Used
5	Not Used
6	Not Used
7	Not Used
8	Encoder Count Error
9	Position compare (EQUn) output
10	Position captured-on-gated -index flag.
11	*** Position Captured (Triggered Event Occurred) Flag.**
12	**A Power On Reset POR has occurred.**
13	**This Node detected a MACRO Ring Break (MRB).**
14	**Amplifier Enabled.**
15	*** Amplifier or Station Node shutdown Fault.**
16	Home Flag(HMFLn) Input Value
17	*** Positive End Limit Flag (PILMn) Input Value.**
18	*** Negative End Limit Flag (NILMn) Input Value**
19	Fast User Status Flag (UserStatus1) or USERn Input Value if have PMAC Gate Array
20	Fast User Status Flag (UserStatus2) or FlgWn Input Value if have PMAC Gate Array
21	Fast User Status Flag (UserStatus3) or FlgVn Input Value if have PMAC Gate Array
22	Fast User Status Flag (UserStatus4) or FlagUn Input Value if have PMAC Gate Array
23	Fast User Status Flag (UserStatus5) or FlagTn Input Value if have PMAC Gate Array
Note: The items in bold are reserved and defined flag locations.	

NodeCntrlCmd: (Sent by Master - Located in Turbo at: Y:$3440 .. Y:$347F / Y-portion of Flag Address)

Bit	Function
0	*** Position Capture (Triggered Event) Enable Flag**
1	Not Used
2	Not Used
3	Not Used
4	Not Used
5	Not Used
6	Not Used
7	Not Used
8	Reserved for future ring protocol control
9	Reserved for future ring protocol control
10	Reserved for future ring protocol control
11	*** Position Capture (Triggered Event) Enable Flag**
12	Node Reset Command
13	**This Slave detected a MACRO Ring Break (MRB) & became a Synchronizing Master**
14	*** Real-time Data or Amplifier Enable**
15	**When B13 = 1 then B15 = 1 & is a Station Fault.**
16	Reserved for future ring protocol control
17	Reserved for future ring protocol control
18	Reserved for future ring protocol control
19	Fast User Defined Command Flag (UserCmd1)
20	Fast User Defined Command Flag (UserCmd2)
21	Fast User Defined Command Flag (UserCmd3)
22	Fast User Defined Command Flag (UserCmd4)
23	Fast User Defined Command Flag (UserCmd5)
Note: The items in bold are reserved and defined flag locations.	

Turbo PMAC2 Node Addresses

MACRO IC Node	Axis/IO	User Node	Node 24-bit Transfer Addresses	Node 16-bit (upper 16 bits) Transfer Addresses
(IC0) 0	Axis 1	0	Y:$078420	Y:$078421, Y:$078422, Y:$078423
(IC0) 1	Axis 2	1	Y:$078424	Y:$078425, Y:$078426, Y:$078427
(IC0) 2	I/O	2	X:$078420	X:$078421, X:$078422, X:$078423
(IC0) 3	I/O	3	X:$078424	X:$078425, X:$078426, X:$078427
(IC0) 4	Axis 3	4	Y:$078428	Y:$078429, Y:$07842A, Y:$07842B
(IC0) 5	Axis 4	5	Y:$07842C	Y:$07842D, Y:$07842E, Y:$07842F
(IC0) 6	I/O	6	X:$078428	X:$078429, X:$07842A, X:$07842B
(IC0) 7	I/O	7	X:$07842C	X:$07842D, X:$07842E, X:$07842F
(IC0) 8	Axis 5	8	Y:$078430	Y:$078431, Y:$078432, Y:$078433
(IC0) 9	Axis 6	9	Y:$078434	Y:$078435, Y:$078436, Y:$078437
(IC0) 10	I/O	10	X:$078430	X:$078431, X:$078432, X:$078433
(IC0) 11	I/O	11	X:$078434	X:$078435, X:$078436, X:$078437
(IC0) 12	Axis7	12	Y:$078438	Y:$078439, Y:$07843A, Y:$07843B
(IC0) 13	Axis 8	13	Y:$07843C	Y:$07843D, Y:$07843E, Y:$07843F
(IC0) 14	Master/Master	14	X:$078438	X:$078439, X:$07843A, X:$07843B
(IC0) 15	Master/Slave	15	X:$07843C	X:$07843D, X:$07843E, X:$07843F
(IC1) 0	Axis 9	16	Y:$079420	Y:$079421, Y:$079422, Y:$079423
(IC1) 1	Axis 10	17	Y:$079424	Y:$079425, Y:$079426, Y:$079427
(IC1) 2	I/O	18	X:$079420	X:$079421, X:$079422, X:$079423

Turbo PMAC2 Node Addresses (Continued)

MACRO IC Node	Axis/IO	User Node	Node 24-bit Transfer Addresses	Node 16-bit (upper 16 bits) Transfer Addresses
(IC1) 3	I/O	19	X:$079424	X:$079425, X:$079426, X:$079427
(IC1) 4	Axis 11	20	Y:$079428	Y:$079429, Y:$07942A, Y:$07942B
(IC1) 5	Axis 12	21	Y:$07942C	Y:$07942D, Y:$07942E, Y:$07942F
(IC1) 6	I/O	22	X:$079428	X:$079429, X:$07942A, X:$07942B
(IC1) 7	I/O	23	X:$07942C	X:$07942D, X:$07942E, X:$07942F
(IC1) 8	Axis 13	24	Y:$079430	Y:$079431, Y:$079432, Y:$079433
(IC1) 9	Axis 14	25	Y:$079434	Y:$079435, Y:$079436, Y:$079437
(IC1) 10	I/O	26	X:$079430	X:$079431, X:$079432, X:$079433
(IC1) 11	I/O	27	X:$079434	X:$079435, X:$079436, X:$079437
(IC1) 12	Axis 15	28	Y:$079438	Y:$079439, Y:$07943A, Y:$07943B
(IC1) 13	Axis 16	29	Y:$07943C	Y:$07943D, Y:$07943E, Y:$07943F
(IC1) 14	Master/Master	30	X:$079438	X:$079439, X:$07943A, X:$07943B
(IC1) 15	Master/Slave	31	X:$07943C	X:$07943D, X:$07943E, X:$07943F
(IC2) 0	Axis 17	32	Y:$07A420	Y:$07A421, Y:$07A422, Y:$07A423
(IC2) 1	Axis 18	33	Y:$07A424	Y:$07A425, Y:$07A426, Y:$07A427
(IC2) 2	I/O	34	X:$07A420	X:$07A421, X:$07A422, X:$07A423
(IC2) 3	I/O	35	X:$07A424	X:$07A425, X:$07A426, X:$07A427
(IC2) 4	Axis 19	36	Y:$07A428	Y:$07A429, Y:$07A42A, Y:$07A42B
(IC2) 5	Axis 20	37	Y:$07A42C	Y:$07A42D, Y:$07A42E, Y:$07A42F
(IC2) 6	I/O	38	X:$07A428	X:$07A429, X:$07A42A, X:$07A42B
(IC2) 7	I/O	39	X:$07A42C	X:$07A42D, X:$07A42E, X:$07A42F
(IC2) 8	Axis 21	40	Y:$07A430	Y:$07A431, Y:$07A432, Y:$07A433
(IC2) 9	Axis 22	41	Y:$07A434	Y:$07A435, Y:$07A436, Y:$07A437
(IC2) 10	I/O	42	X:$07A430	X:$07A431, X:$07A432, X:$07A433
(IC2) 11	I/O	43	X:$07A434	X:$07A435, X:$07A436, X:$07A437
(IC2) 12	Axis 23	44	Y:$07A438	Y:$07A439, Y:$07A43A, Y:$07A43B
(IC2) 13	Axis 24	45	Y:$07A43C	Y:$07A43D, Y:$07A43E, Y:$07A43F
(IC2) 14	Master/Master	46	X:$07A438	X:$07A439, X:$07A43A, X:$07A43B
(IC2) 15	Master/Slave	47	X:$07A43C	X:$07A43D, X:$07A43E, X:$07A43F
(IC3) 0	Axis 25	48	Y:$07B420	Y:$07B421, Y:$07B422, Y:$07B423
(IC3) 1	Axis 26	49	Y:$07B424	Y:$07B425, Y:$07B426, Y:$07B427
(IC3) 2	I/O	50	X:$07B420	X:$07B421, X:$07B422, X:$07B423
(IC3) 3	I/O	51	X:$07B424	X:$07B425, X:$07B426, X:$07B427
(IC3) 4	Axis 27	52	Y:$07B428	Y:$07B429, Y:$07B42A, Y:$07B42B
(IC3) 5	Axis 28	53	Y:$07B42C	Y:$07B42D, Y:$07B42E, Y:$07B42F
(IC3) 6	I/O	54	X:$07B428	X:$07B429, X:$07B42A, X:$07B42B
(IC3) 7	I/O	55	X:$07B42C	X:$07B42D, X:$07B42E, X:$07B42F
(IC3) 8	Axis 29	56	Y:$07B430	Y:$07B431, Y:$07B432, Y:$07B433
(IC3) 9	Axis 30	57	Y:$07B434	Y:$07B435, Y:$07B436, Y:$07B437
(IC3) 10	I/O	58	X:$07B430	X:$07B431, X:$07B432, X:$07B433
(IC3) 11	I/O	59	X:$07B434	X:$07B435, X:$07B436, X:$07B437
(IC3) 12	Axis 31	60	Y:$07B438	Y:$07B439, Y:$07B43A, Y:$07B43B
(IC3) 13	Axis 32	61	Y:$07B43C	Y:$07B43D, Y:$07B43E, Y:$07B43F
(IC3) 14	Master/Master	62	X:$07B438	X:$07B439, X:$07B43A, X:$07B43B
(IC3) 15	Master/Slave	63	X:$07B43C	X:$07B43D, X:$07B43E, X:$07B43F

ADC Register Table

Geo Drive		Value	Sin	Cos
1 (IC#0)	MS0,MI101 MS1,MI102	12 or 13	X:$78421,8,16,s	X:$78422,8,16,s
2 (IC#0)	MS4,MI101 MS5,MI102	12 or 13	X:$78429,8,16,s	X:$7842A,8,16,s
3 (IC#0)	MS8,MI101 MS9,MI102	12 or 13	X:$78431,8,16,s	X:$78432,8,16,s
4 (IC#0)	MS12,MI101 MS13,MI102	12 or 13	X:$78439,8,16,s	X:$7843A,8,16,s
5 (IC#1)	MS16,MI101 MS17,MI102	12 or 13	X:$79421,8,16,s	X:$79422,8,16,s
6 (IC#1)	MS20,MI101 MS21,MI102	12 or 13	X:$79429,8,16,s	X:$7942A,8,16,s
7 (IC#1)	MS24,MI101 MS25,MI102	12 or 13	X:$79431,8,16,s	X:$79432,8,16,s
8 (IC#1)	MS28,MI101 MS29,MI102	12 or 13	X:$79439,8,16,s	X:$7943A,8,16,s
9 (IC#2)	MS32,MI101 MS33,MI102	12 or 13	X:$7A421,8,16,s	X:$7A422,8,16,s
10 (IC#2)	MS36,MI101 MS37,MI102	12 or 13	X:$7A429,8,16,s	X:$7A42A,8,16,s
11 (IC#2)	MS40,MI101 MS41,MI102	12 or 13	X:$7A431,8,16,s	X:$7A432,8,16,s
12 (IC#2)	MS44,MI101 MS45,MI102	12 or 13	X:$7A439,8,16,s	X:$7A43A,8,16,s
13 (IC#3)	MS48,MI101 MS49,MI102	12 or 13	X:$7B421,8,16,s	X:$7B422,8,16,s
14 (IC#3)	MS52,MI101 MS53,MI102	12 or 13	X:$7B429,8,16,s	X:$7B42A,8,16,s
15 (IC#3)	MS56,MI101 MS57,MI102	12 or 13	X:$7B431,8,16,s	X:$7B432,8,16,s
16 (IC#3)	MS60,MI101 MS61,MI102	12 or 13	X:$7B439,8,16,s	X:$7B43A,8,16,s

The ADCs can be set to be read one at a time (Resolver 1 or Resolver 2) by setting the MI101 or MI102 to 12 or 13 and then pointing with an M-variable at the IC variables. Suggested M-variables to point to the X-registers are M905 and M906.

Example:
M905->X:$78421,8,16,s
M906->X:$78422,8,16,s

Note: Setting Up MI101 or MI102 equal to 12 or 13 is only for tuning the phase shift or trouble shooting the resolver inputs. Return MI101 or MI102 to its original value for resolver inputs (4 or 5).

Stepping through an Electrical Cycle

It is important to know what commands to use in order to force the motor into different locations of the electrical cycle.

Two different cases will determine the command set that will be used based on the commutation phase angle. Below is a list of both command sets in increments of 30 degrees electrical from 0-360 degrees. The following is meant as a reference for understanding and there is no need to perform this test to setup the Hall Effects with PMAC.

Manually Stepping through an Electrical Cycle at 30 degree increments

Commutation Phase Angle at 120° –> Ixx72= 683(Turbo)
Direct PWM or Sinusoidal Commutation

```
P179=I179  P129=I129          ; store previous offsets before test
#1o0                          ; Open loop command of zero magnitude
I179=3000  I129=0             ; 0°elec.
I179=3000  I129=-1500         ; -30°elec.
I179=3000  I129=-3000         ; -60°elec.
I179=1500  I129=-3000         ; -90°elec.
I179=0  I129=-3000            ; -120°elec.
I179=-1500 I129=-1500         ; -150°elec.
I179=-3000 I129=0             ; 180°elec.
I179=-3000 I129=1500          ; 150°elec.
I179=-3000 I129=3000          ; 120°elec.
I179=-1500 I129=3000          ; 90°elec.
I179=0  I129=3000             ; 60°elec.
I179=1500  I129=1500          ; 30°elec.
I179=3000  I129=0             ; 0°elec.
I179=P179  I129=P129          ; restore previous offsets after test
```

Commutation Phase Angle at 240° –> Ixx72= 1365(Turbo)
Direct PWM Commutation

```
P179=I179  P129=I129          ; store previous offsets before test
#1o0                          ; Open loop command of zero magnitude
I179=3000  I129=0             ; 0°elec.
I179=1500  I129=1500          ; -30°elec.
I179=0  I129=3000             ; -60°elec.
I179=-1500 I129=3000          ; -90°elec.
I179=-3000 I129=3000          ; -120°elec.
I179=-3000 I129=1500          ; -150°elec.
I179=-3000 I129=0             ; 180°elec.
I179=-1500 I129=-1500         ; 150°elec.
I179=0  I129=-3000            ; 120°elec.
I179=1500  I129=-3000         ; 90°elec.
I179=3000  I129=-3000         ; 60°elec.
I179=3000  I129=-1500         ; 30°elec.
I179=3000  I129=0             ; 0°elec.
I179=P179  I129=P129          ; restore previous offsets after test
```

Note:

Remember to clear the offsets when finished with the test Ixx79=0 and Ixx29=0.

Now that we know how to step through electrical cycle, we must determine the location and values of the Hall Effect Transitions. Typically, there are two different locations for the transitions:

0° 60° 120° 180° -120° -60°
30° 90° 150° -150° -90° -30°

To determine where the transitions occur, drive the motor to electrical zero by issuing the following command:

```
P179=I179  P129=I129          ; store previous offsets before test
#1o0                          ; for motor 1- #2 for motor 2 etc…
I179=3000  I129=0             ; 0°elec.
```

Then write the phase position to 0 and turn off the current to the motor by:

```
M171=0
I179=P179   I129=P129         ; restore previous offsets after test
#1k
```

Now that the motor is killed, rotate the shaft through the electrical cycle looking for a change of state. Once we find the location where the halls change state, we can calculate where in the electrical cycle we are by the following formula:

Electrical Cycle Degrees = M171/I171*360

It might be easier to write a short PLC that stores the electrical cycle location similar to the following:

```
OPEN PLC 2 CLEAR
P171=M171/I171 *360
CLOSE
```

Now put P171 in a watch window and determine one of the transition points. Now all transition points should be known and thus be able to determine where the Hall Effect Sensors are located.

0° 60° 120° 180° -120° -60° ; Hall Sensors at 30°, 150°, and 270°
30° 90° 150° -150° -90° -30° ; Hall Sensors at 0°, 120°, and 240°

Example 1 of Hall Effect Values

Turbo PMAC Hall Effect Example with Ixx72=683 Hall Sensors at 30°, 150°, and 270°

For the Turbo PMAC, the Hall effect method of phasing uses two PMAC I-Variables, Ixx81 and Ixx91.

Ixx81 tells PMAC what address to read for absolute power-on phase-position information, if such information is present. Ixx91 tells how the data at the address specified by Ixx81 is to be interpreted.

```
M124->X:$78000,20       ;W channel 1
M125->X:$78000,21       ;V channel 1
M126->X:$78000,22       ;U channel 1
M127->X:$78000,20,4     ;T,U,V,W channel 1
```

Ixx79	Ixx29	Electrical Cycle	U	V	W
3000	-1500	-30	0	1	0
1500	-3000	-90	1	1	0
-1500	-1500	-150	1	0	0
-3000	1500	150	1	0	1
-1500	3000	90	0	0	1
1500	1500	30	0	1	1
3000	-1500	-30	0	1	0

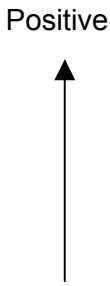

The HEZ occurs at 60° electrical. If the transition of V from 0 to 1 at the HEZ point is in the negative direction (like this example), then the hall effect sensing would be considered reversed. If the transition of V from 0 to 1 at the HEZ is in the positive direction, then the hall effect sensing would be considered standard.

Positive refers to the direction of the electrical cycle.

The description of Ixx91 in the Software Reference manual shows the common values of offsets used, for all the cases where the zero point in the hall-effect cycle is at a 0°, 60°, 120°, 180°, -120°, or -60° point -- where manufacturers generally align the sensors.

Ixx81 Hall Effect phase settings are described in the Turbo Software manual.

Ixx91 Hall Effect Setup for Turbo PMAC2

Hex ($)	C				B				0				0				0				0			
Bit	23	22	21	20	19	18	17	16	15	14	13	12	11	10	9	8	7	6	5	4	3	2	1	0
Value	1	1	0	0	1	0	1	1	0	0	0	0	0	0	0	0	0	0	0	0	0	0	0	0

Hall Effect Offset ($0B)

Reserved

Standard Hall Sense (0), Reversed Hall Sense (1)

Hall Effect Type Phase (1)

Ixx91 mask = $80 + $40 + $0B = $CB

For Turbo PMAC2 axis #1, this would give us `I191 = $CB0000`

Example 2 of Hall Effect Values

Rough phasing routines Based on Tests Results

```
OPEN PLC 11 CLEAR
IF(M128&7=6)
    M171=330/360*I171
ELSE
    IF(M128&7=2)
        M171=270/360*I171
    ELSE
        IF(M128&7=3)
            M171=210/360*I171
        ELSE
            IF(M128&7=1)
                M171=150/360*I171
            ELSE
                IF(M128&7=5)
                    M171=90/360*I171
                ELSE
                    M171=30/360*I171
                ENDI
            ENDI
        ENDI
    ENDI
ENDI
DISPLC11
CLOSE
```

USEFUL NOTES

- Geo MACRO drives are using 2-axis MACRO station CPU's. They are not the same with the 8-axis or 16-axis MACRO CPU's
- Firmware 1.005 and newer can only be downloaded to Geo MACRO drives that use logic board (603542) revision -105 and above.
- Secondary Encoders are installed into Geo MACRO drives that use logic board (603542) revision -10A and above.
- Firmware 1.006 gives the user the capability to enable or disable the Motor Over Temperature Input each axis individually (MS<node,MI100).
- Firmware 1.006 gives the user the capability to disable the second motor node for single axis units (MS<node,MI100).
- Firmware 1.006 Enables the Encoder Loss Circuitry. Quadrature or Sinusoidal.
- ECO 1629 against 300-603542-10B, Friday, August 19, 2005.
- Firmware 1.007 gives the ability to the user to turn on (5V) and off (0V) the ENCPWR line of the primary encoder channels, which allows resetting of the encoder.