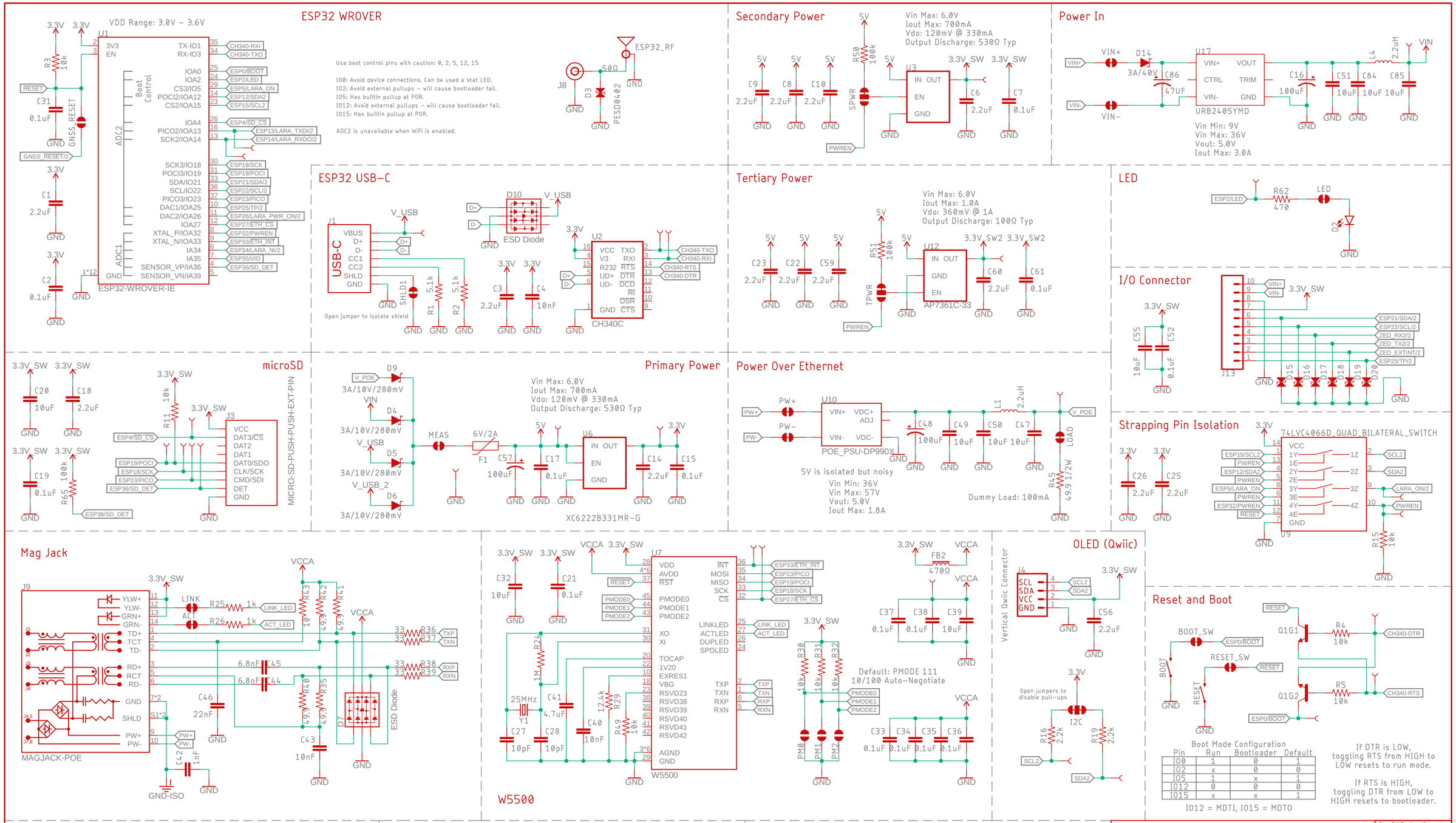

USB Track Impedance: Differential Pair
https://saturnpcb.com/saturn-pcb-toolkit/
Prepreg thickness: 0.2mm (7.87 mil). Er = 4.6
10.5 mil track with 9.5 mil gap (20 mil center to center) = 90 Ohms

RF Track Impedance: Coplanar Waveguide with Ground Calculations
Ground is on layer 2. Prepreg thickness: 0.2mm. Er = 4.6
13.74 mil track with 8 mil gap = 50 Ohms
https://saturnpcb.com/saturn-pcb-toolkit/

Product Identifier

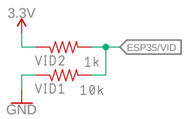

Released under the Creative Commons
Attribution Share-Alike 4.0 License
https://creativecommons.org/licenses/by-sa/4.0/

Special Instructions

TITLE: RTK_Everywhere_L-Band_Cellular

Design by: Paul Clark

REV: v10

Date: 23/11/2023 10:40

Sheet: 1/2

u-blox ZED-F9P

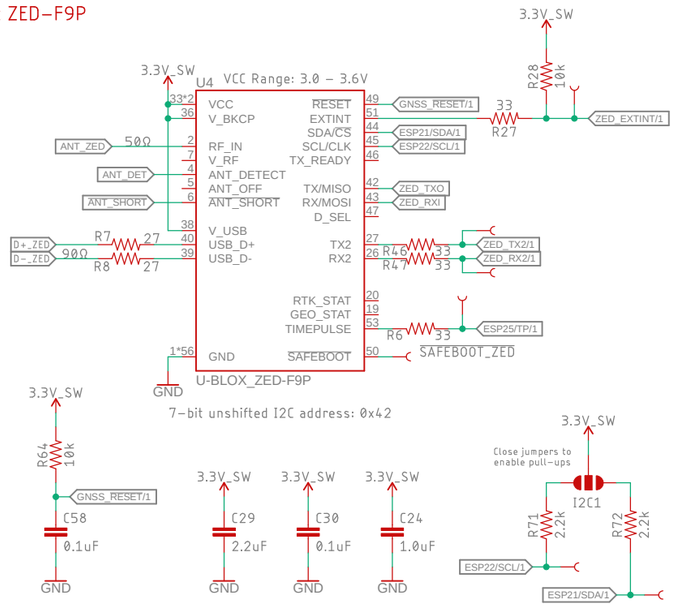

u-blox NEO-D9S

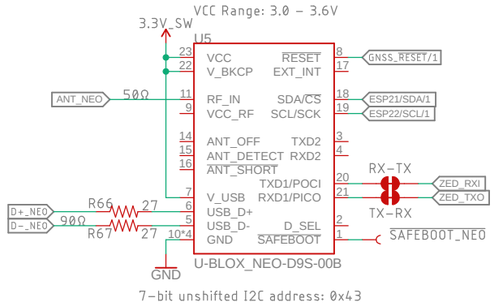

u-blox LARA-R6001

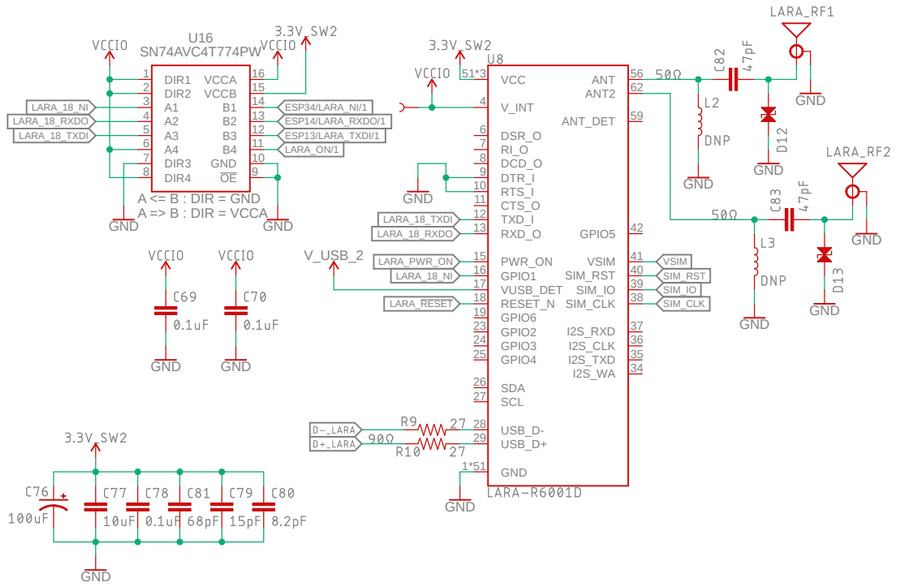

USB Hub USB-C

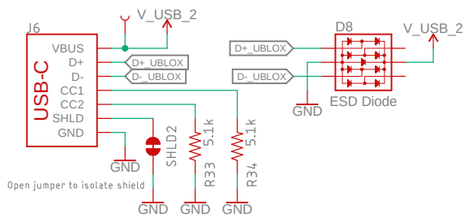

USB Hub

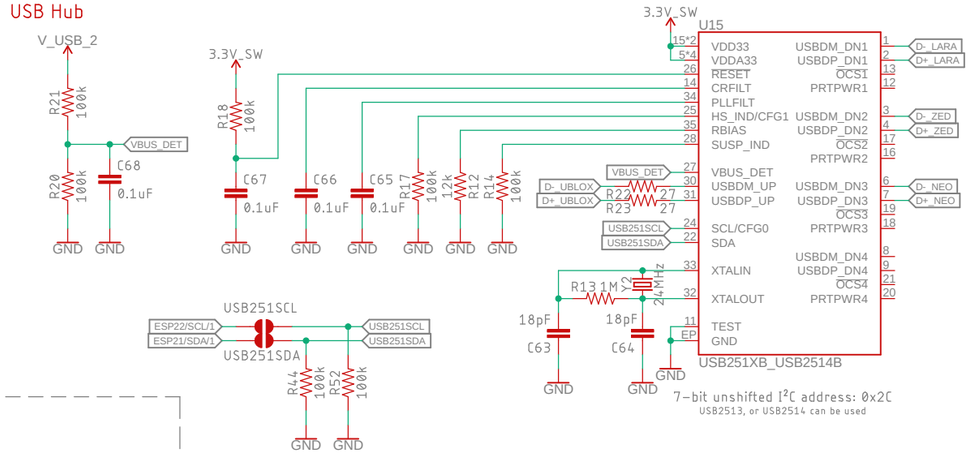

Open Collector Outputs

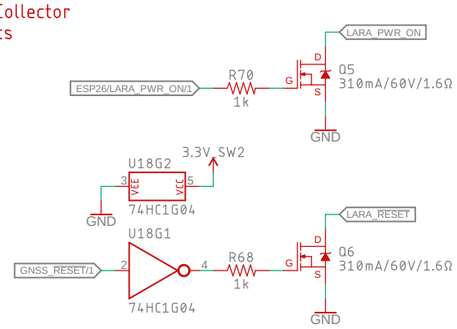

SIM

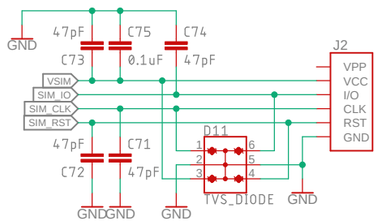

Antenna Power

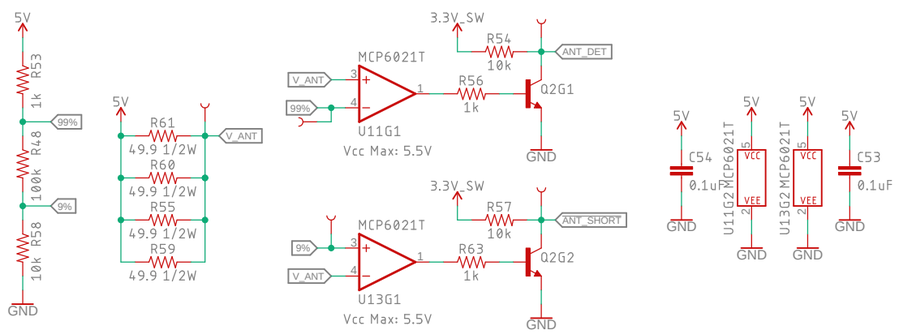

Antenna Splitter

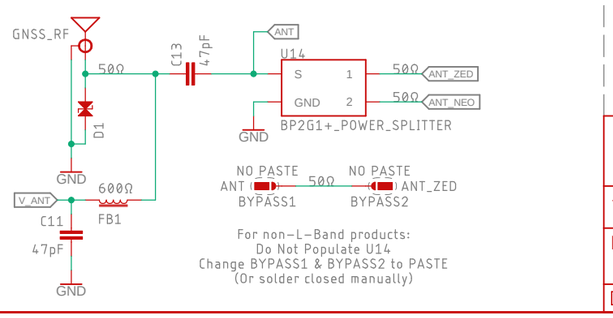

Released under the Creative Commons
Attribution Share-Alike 4.0 License
https://creativecommons.org/licenses/by-sa/4.0/

TITLE: RTK_Everywhere_L-Band_Cellular

Design by: Paul Clark

REV: v10

Date: 23/11/2023 10:40

Sheet: 2/2