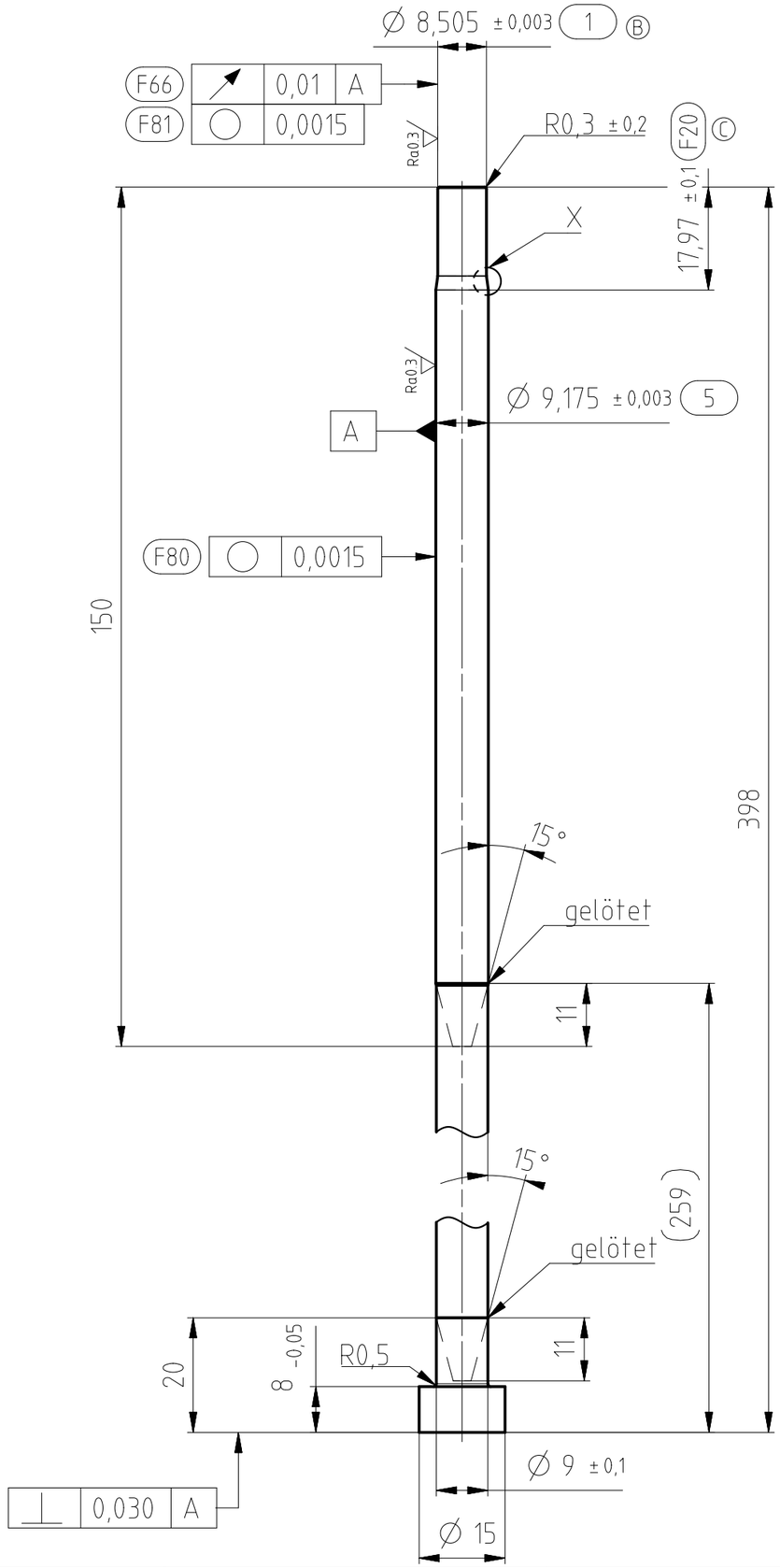

DETAIL X
SCALE 10:1

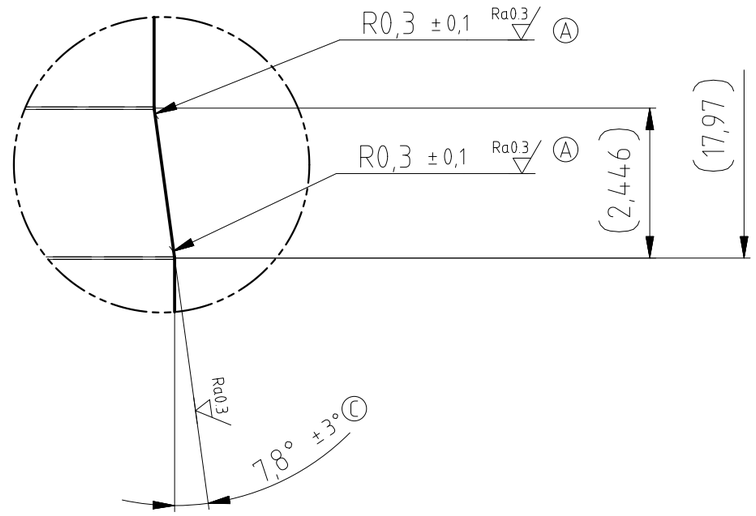

Ra3,2 (Ra0,3) -0,1 -0,3 +0,3

-	1	Dorn	HM ISO K20	
-	1	Verlängerung	1,0540	
-	1	Halter	1,6511	
LFd. Nr.	Stück	Benennung	Werkstoff	Oberfläche

CAD/CAM COMPATIBLE	C	Winkel war 30°; Maß war 16,1;	norbert.innerhofer
	REV LEV / REV LOC	DESCRIPTION OF CHANGE	REVISED BY

SURFACE ACCORDING TO ISO 1302: X=√Rz 63 Y=√Rz 16 Z=√Rz 6,3 U=√Rz 2,5 W=√Rz 1 | X Y Z U W

ADAPTER/MACHINE (USED IN): BRU_APH-100

MATERIAL: n/a n/a
SURFACE TEXTURE: n/a
PART (DRAWING) NAME: Formdorn

DRAWN BY: norbert.innerhofer
DRAWN DATE: 10-Jul-2015
GKN LOCATION: BRU
DIMENSIONS: mm ISO 2768-mK ISO 8015
CAD SYSTEM: NX
ISO-E
LOCAL DRAWING NUMBER: FVB5095FD03
SCALE: 1:1
SH SIZE: A3
GLOBAL PDM NUMBER: 1A10147565
STATUS: 60_Standard-Release 07.12.2016 10:43
SHEET
OF

GKN SINTER METALS

REPLACEMENT FOR | REPLACED WITH | REFERENCE

© 2006 GKN Sinter Metals. All rights reserved. Copyright and design rights in this model and drawing are the property of GKN Sinter Metals. All information herein is considered proprietary and not transferable without the permission of GKN Sinter Metals.