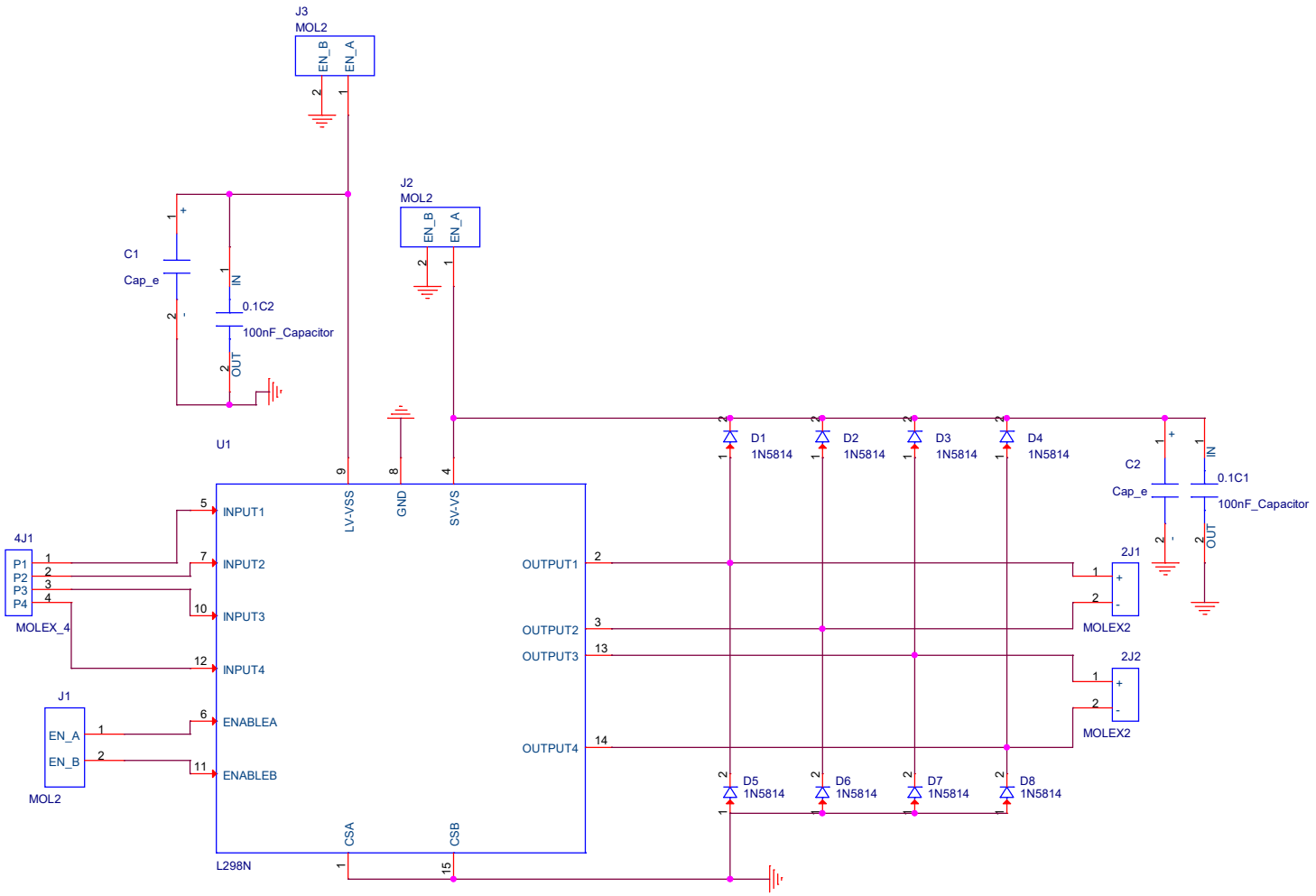

Title	Perfect Colour Motor Driver Schematic	
Size B	Document Number Motor Driver	Rev 01
Date: Tuesday, February 26, 2019	Sheet 1 of 1	