2026 4th International Conference on Integrated Circuits and Communication Systems (ICICACS)

Hybrid Photovoltaic and Ducted Energy Integration for Dynamic EV Charging

Sam Navin M
School of Computing
Vel Tech Rangarajan Dr. Sagunthala R & D Institute of Science and Technology
Chennai, India
drsamnavinm@veltech.edu.in

Seshathri K
School of Computing
Vel Tech Rangarajan Dr. Sagunthala R & D Institute of Science and Technology
Chennai, India
vtu22973@veltech.edu.in

Lekha K
School of Computing
Vel Tech Rangarajan Dr. Sagunthala R & D Institute of Science and Technology
Chennai, India
vtu21508@veltech.edu.in

Jayantha Sri B
School of Computing
Vel Tech Rangarajan Dr. Sagunthala R & D Institute of Science and Technology
Chennai, India
vtu21450@veltech.edu.in

***Abstract*— Electric vehicles (EVs) are recognized as a global friendly solution in comparison to conventional transportation modes. The adoption of EV's is restricted by factors such as inadequate charging stations, long hours of charging, and battery degradation. In order to mitigate these problems, this study proposes an electric vehicle battery charging system using a hybrid form of renewable energy sources such as solar photovoltaics and ducted wind energy. The proposed system facilitates uninterrupted harvesting of electric power during vehicle motion. Additionally, it uses a microcontroller- based Dynamic Energy Management System (DEMS) to monitor battery parameters such as voltage, temperature, and state of charge. Experimental results indicate that the proposed hybrid electric vehicle battery charging system improves voltage stability in the range of 12-18 volts. The system also improves uninterrupted battery charging by 30-35%. The proposed electric vehicle battery charging system reduces dependency on stationary electric vehicle charging stations.**

Keywords*— *Hybrid Charging, Electric Vehicles, Solar Photovoltaic, Wind Energy, Dynamic Charging

I. Introduction

EVs have become an important solution to minimize greenhouse gas emissions and dependence on fossil fuels and consequently used to support sustainable transportation systems. With the high rate of EV uptake, the world has experienced the evolution of the charging technologies, such as the wireless charging, renewable energy, and smart energy management system. These advances are meant to make the systems convenient to the users and efficient. Nevertheless, certain issues like the inadequate charging infrastructure, extended charging time, and reliance on fixed charging stations still impede widespread use. These problems cause a serious impact on long-range transportation and present inefficiencies in operations **[1–5]**. There is a lot of research work being done towards the enhancement of EV charging systems. A wireless power transfer system which uses inductive coupling allows a vehicle to charge contactless and eliminates the reliance on physical connectors. The system incorporates communication modules that are automatized to improve the ease of the user. Even so, its usefulness is limited by the fact that coil misalignment and transmission losses influence the efficiency of power transfer. Also, the system is still reliant on the fixed infrastructure and fails to cater to dynamic charging situations **[1]**. Solar-powered EV charger station provided with an in-built automatic billing system shows efficient use of renewable energy to charge the vehicles. The system also has energy monitoring and billing accuracy and as such, it can be applicable to commercial applications. Nevertheless, its functionality very much relies on the irradiance of the sun and it can only work effectively under static conditions which restricts its usage in cases of vehicle movement **[2]**. A wireless EV charging system powered by IoT offers an option of real-time monitoring, automated bill payment and user authentication. IoT integration improves the interaction and intelligence of the systems through user interaction and promotes efficiency in operations. In spite of these benefits the system is not flexible enough as it depends on fixed charging stations and is not capable of charging the vehicle on the move **[3]**. The EV charging and monitoring system based on photovoltaic is concerned with the safety of batteries and their regulation of voltage in different environmental conditions. The system enhances stability in charging and safe operation by providing automated control systems. Nonetheless, it relies on solar power alone, which is prone to changes in the environment, and prevents uninterrupted supply of energy **[4]**. A charging system is an automated EV charger with a rigid-flexible manipulator and vision-based detection system that allows automatic positioning of the charging port and connecting to the charging port. This ensures less human intervention and automation of operations. The system however adds more complexities and is very reliant on visual accuracy and environmental conditions which can influence the reliability **[5]**. An e-bike charging system which is renewable energy based using wireless charging and split battery design is better in energy utilization and flexibility in operation. The system accommodates grid and renewable sources of energy, which improves flexibility. Nevertheless, the design is only restricted to small-scale application and fails to consider large-scale EV systems and dynamic charging needs **[6]**. An EV charging system with the blockchain technology is safe and dynamic, and it is based on the secure transactions of the energy exchange, their privacy, and transparency. The implementation of smart contracts improves the efficiency of the billing system and its security. Nevertheless, the strategy makes computations more complicated and does not include the mechanism of renewable energy generation **[7]**. A DC to

979-8-3315-8019-3/26/$31.00 ©2026 IEEE

DC converter is bi-directional, which allows converting power and management of the energy flow in EV application. The system facilitates the voltage regulation and energy feedback functions enhancing efficiency. Nevertheless, it only works on power electronics design and does not take into account the integration of renewable energy and dynamic charging cases **[8]**. A resilient EV charging system based on renewable energy coupled with cyber-security in communication between EVs and power infrastructure. The system also improves reliability and prevents cyber threats in intelligent charging systems. It, however, is silent on the production of power when the vehicle is in motion and relies on external power stations **[9]**. There is real-time monitoring, authentication, and automated billing in an RFID-based smart EV charging system. The system is more usable and has better operational control, which suits smart grid settings. Nevertheless, it depends on fixed infrastructure and external sources of energy, which restrict its use in dynamic charging **[10]**. The economic and environmental studies also highlight the benefits of EVs. Hybrid and battery electric cars dramatically decrease the threat of global warming as compared to the traditional gasoline cars, and advocate cleaner transportation systems **[11]**. Life Cycle analysis proves that the advanced EV technologies are less harmful to the environment and more sustainable than the traditional cars **[12]**. Economic analysis indicates that EVs are economical in the long run because they consume less fuel and are less expensive to maintain even though they are expensive to purchase **[13]**. The well-to-wheel analysis also indicates enhanced energy efficiency and lower CO 2 emissions, and it supporting the long-term advantage of EV adoption **[14]**. Research in the form of surveys has revealed the unremitting development of EV technologies, the infrastructure, and the integration of renewable energy, which spells high potential in the future **[15]**.

In spite of such developments, there are a few research gaps. The existing systems are mostly stationary charging systems that do not accommodate charging in case of vehicle movement. The systems based on renewable energy tend to be dependent on one source, which leads to a lack of a constant supply of energy. There is also the absence of smart real-time energy management systems, which lowers the efficiency and battery safety. These restrictions demonstrate the necessity of having a dynamic charging system that is based on renewable energy that is capable of functioning round-the-clock and adjust to changing environmental conditions. This work is inspired by the need to solve these challenges by coming up with an active EV charging system that incorporates solar and wind energy and a smart control system. The proposed system will provide uninterrupted energy supply, effective energy use, and safe systems when vehicles are in motion, which will enhance overall performance and sustainability of the system. The contributions of the work are as follows:

- To develop the system that will be able to charge the electric cars using solar and wind energy during movement.
- To have a control system to regulate the use and storage of energy in electric cars.
- To provide the charging process with automatic execution.
- To improve the efficiency and sustainability of transportation by use of renewable sources of energy.

The rest of the paper is organized as follows. Section II demonstrates the proposed system architecture. The results of the experiment and its evaluation are included in Section III. Lastly, Section IV is a conclusion to the paper and a description of future research directions.

II. Proposed System Design

This work aims at addressing the disadvantages of current EV charging infrastructures by developing a new system of designing a hybrid renewable energy based dynamic charging system that can tap solar PV and ducted wind energy to supply power continuously throughout vehicular movement. The total system will be one consisting of two sources of energy, solar PV and ducted wind energy. The solar PV system makes use of the solar irradiance and transforms it into electrical power through the photovoltaic effect. Simultaneously, ducted wind energy system utilizes wind power by means of forced rotation of the duct caused by passing vehicles. This rotation changes into electrical energy. The hybridism of the two sources of energy will also enable continuous supply of energy when vehicles are in motion. It is so due to the fact that automotive movement produces a great amount of wind energy at greater velocities.

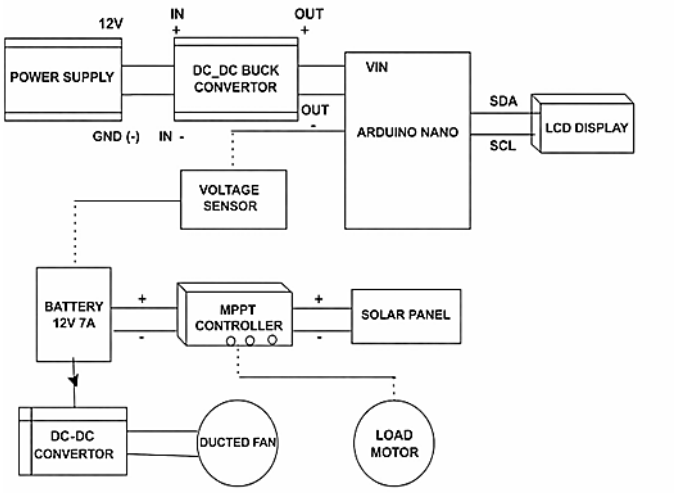

Fig. 1. Hybrid solar and ducted wind energy-based dynamic EV charging system with Arduino Nano control and monitoring.

Figure 1 indicates the top-level architecture of the proposed hybrid electric vehicle (HEV) charging system. The main sources of energy in the system are solar photo- voltaic panels and a ducted wind turbine. The rectifier and DC2DC converter circuitry are used to condition power generation and supply it to the battery. Dynamic Energy Management System (DEMS) that verifies the working of the voltage, temperature and state of charge in order to support efficient and safe charge. DEMS is a microcontroller-based system that is developed using Arduino Nano to manage the entire system. This system is able to constantly check key battery variables like battery voltage, battery temperature, and State of Charge (SoC) with sensors. The system is dynamically controlled to operate the system efficiently and safely depending on the parameters. The charging is triggered once SoC reaches the minimum of 25. The charging is ceased at the SoC more than 95%. The amount of current that the

battery attracts is also determined by the power produced by the system. The total power generated is expressed by the sum of solar and wind power contributions and it is shown in **Equation (1). Equation (2)** represents the expression of solar power. The wind power generation is expressed in **Equation (3).**

$$P_{total} = P_{solar} + P_{wind} - P_{loss} \quad (1)$$

$$P_{solar} = \eta_s . A_s . G \quad (2)$$

where $\eta_s$is the efficiency of the solar panel (typically 15%–20% under standard test conditions), $A_s$is the effective surface area of the solar panel (m^2), and $G$is the solar irradiance (W/m^2).

$$P_{wind} = \frac{1}{2}\rho A_w v^3 \eta_w \quad (3)$$

where ρ is the air density (approximately 1.225 kg/m^3 at sea level), A_w is the swept area of the turbine blades (m²), v is the airflow velocity (m/s), and $\eta_w$is the efficiency of the wind energy conversion system. The system losses is shown in **Equation (4)**.

$$P_{loss} = P_{conv} + P_{wire} + P_{bat} + P_{mech} \quad (4)$$

where P_{conv} represents converter losses, P_{wire} represents transmission losses, P_{bat} represents battery losses, and P_{mech}represents mechanical losses in the wind system. The battery charging power is represented in **Equation (5).**

$$P_{battery} = \eta_c . P_{total} \quad (5)$$

where $\eta_c$is the efficiency of the charging system. The DEMS work in the form of a continuous control loop algorithm in which it considers such parameters like solar irradiance, wind velocity, battery voltage, temperature, and battery SoC. In the stable conditions, solar energy is given preference due to predictability, and wind energy is applied to complement the energy production during the vehicle move-on in the state of the mind and in the low-sunlight. The system is incorporated with the real time monitoring interface that utilizes the LCD display in real-time monitoring the performance of the system, the voltage of the batteries, the charging status as well as the amount of power supplied by the various sources of power. This aids in tracking down the performance of the system and anomalies that might arise. The given approach is therefore relevant in the effective utilization of hybrid energy, the persistence of the charging process, and the security of the batteries. The presented architecture incorporates the use of power conditioning units, such as rectifiers and DC to DC converters, that guarantee a stable energy transfer between renewable sources and the battery. Throughout that a thermal control mechanism has also been added to ensure that the battery temperature is kept within safe limits in the course of long operation. The low size allows faultless incorporation of the system into the vehicle framework with no impact on aerodynamics. The architecture improves the general system reliability and makes it work well in diverse environmental factors. The methodology represents a flexible and strong platform on hybrid energy-based EV charging which guarantees enhanced efficiency, reliability and sustainability in the operating conditions of real time. **Figure 2** shows the process of charging and monitoring of the battery of the proposed system. To apply to charge the battery, the SoC, voltage and temperature of the battery are continuously monitored by the DEMS. At a specific threshold limit, the SoC starts charging and at another safe level, it stops. This will enable a protection in being overcharged or totally depleted, it also prevents excessive heating of the pack, and extends the life of both the batteries and the system as a whole.

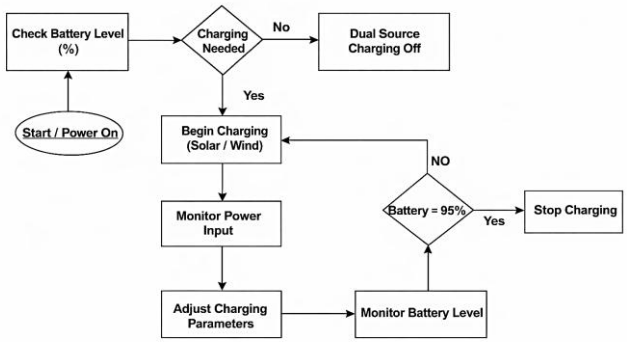

Fig. 2. Flowchart of the proposed dual-source EV charging system with battery monitoring and automatic charging control.

A. Algorithm 1: Dynamic Energy Management System for Hybrid EV Charging

Input: Solar irradiance G, wind velocity v, battery voltage V_b, battery temperature T, State of Charge (SoC)

Output: Controlled battery charging using hybrid energy sources

Step 1: Initialize the system and acquire real-time sensor inputs G, v, V_b, T, SoC.

Step 2: Compute solar power using Equation (2).

Step 3: Compute wind power using Equation (3).

Step 4: Compute system losses using Equation (4).

Step 5: Calculate total hybrid power using Equation (1).

Step 6: Compute battery charging power using (5).

Step 7: Monitor battery safety parameters:

- If $V_b > V_{\text{max}}$ or $T > T_{\text{max}}$ then stop charging immediately (safety protection).
- If $V_b < V_{\text{min}}$: Enable charging to avoid deep discharge.

Step 9: Prioritize energy sources:

- Solar energy is used as the primary energy source when solar irradiance is sufficient and stable.
- Wind energy is used as a supplementary source during vehicle motion or when solar availability is low.

Step 10: Dynamically adjust charging based on $P_{\text{battery}}, V_b, T$.

Step 11: Display real-time parameters (SoC, voltage, temperature, power contributions).

Step 12: Repeat continuously for real-time adaptive control.

III. Result Analysis

A prototype of the proposed hybrid EV charging system was constructed using solar photovoltaic panel of 15 W load and wind turbine with a duct of 50 mm diameter to illustrate the functionality of the hybrid EV charging system. The system was tested by working under different experimental conditions in order to determine the voltage output, stability of charging and individual sources contribution. The results demonstrate the possibilities of hybrid energy integration in continuous and reliable EV charging. The system requires hardware and software integration to be implemented. Hardware includes microcontroller (Arduino Nano), renewable energies (solar photovoltaic panel, ducted wind turbine), voltage and temperature sensor, relay module and rechargeable battery. Software includes Arduino Integrated Development Environment (IDE) to program and control the DEMS. A combination of these elements makes it easy to achieve real time monitoring, control and effective management of energy. **Figure 3** shows the experimental prototype of the proposed hybrid charging system developed for validation. The setup includes a solar panel, ducted wind turbine, Arduino Nano controller, sensors, and battery unit. The prototype is used to evaluate system performance under different operating conditions and to validate the effectiveness of hybrid energy integration.

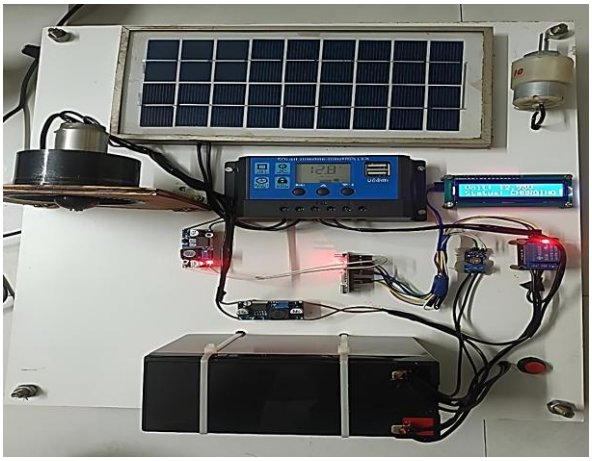

Fig. 3. Experimental prototype of the hybrid solar and wind energy-based EV charging system with real-time monitoring and control unit.

The solar subsystem provides stable DC output when in normal sunlight conditions. As can be observed the voltage is increasing with time, starting with 11.5 V to 12.4 V, which gives a testimony of stable energy production, as well as dependable charging operation, as indicated of **Table 1**. The wind power is produced by the generated power of the vehicle speed. The increasing output terminal voltage of 3.2 V at 10 km/h up to 9.8 V at 30 km/h is a testimony to the fact that wind power is making significant contributions as it travels. Therefore, it means that wind power can be used to complement solar and to make contributions during dynamic conditions, as it is indicated in **Table 2**. By incorporation of solar and wind energy, it is possible to enhance the performance of the power systems. **Table 3** shows that the output voltage produced in hybrid mode is about 12.6 V which compares to higher voltages and continuity in charging which are achieved in solar-only and wind-only mode, due to the complementary nature of the two energy sources. The experimental findings indicate that the hybrid system suggested works, with regards to charged continuity and output stability than an energy supply with the stand-alone system. Solar energy is also generated during the day which offers sustained output on a baseline basis and the wind energy supplements the system during motion or when the irradiance level is low. This complementary action is used to reduce the output voltage variation and enhance the overall reliability. This will save the reliance of fixed charging infrastructures since mobile energy taken off cars was applied in the system which is particularly useful in long distance and rural locations. The efficiency of the whole system is estimated at 75 – 80% taking conversion losses into consideration. The temperature of the battery does not go beyond 30°C - 40°C, indicating excellent thermal control. It was observed that there were some slight variations in voltage (±0.2 V) due to environmental factors and sensor constraints, which however, do not contribute considerably to the performance of the entire system. This control may be high but the performance of the system is at the improvement of the environmental conditions such as the amount of solar radiation and the presence of wind. Besides, the present implementation is done in prototype level and cannot be applied to an industry scale without optimization. Besides, compared to systems that utilize only one source, the hybrid approach permits a higher degree of flexibility when confronting the changing conditions. The multiple use of the various renewable sources ensures that power is not cut off when a source ceases to operate. These enhancements in strength enable the system to be used in real life situations where one is not completely aware of the kind of environmental conditions that are experienced.

TABLE I. Solar panel output voltage variation over time during charging.

Time(min)	Voltage(V)
0	11.5
20	12.1
30	12.4

TABLE II. Wind energy output voltage variation with respect to wind speed.

Speed (km/h)	Voltage(V)
10	3.2
20	6.5
30	9.8

TABLE III. Hybrid system output voltage comparison under solar-only, wind-only, and combined operating modes.

Mode	Voltage(V)
Solar Only	12.2
Wind Only	9.5
Hybrid	12.6

IV. Conclusion

The proposed dynamic EV charging system using hybrid renewable energy consists of solar photovoltaic and ducted wind power that is integrated to allow charging the vehicle in the course of vehicle movement, thus, eliminating the reliance on stationary conventional charging stations. It uses DEMS based on microcontroller that manages the energy consumption by real-time monitoring of battery voltage (11.5 V to 12.6 V), temperature (kept at a temperature below 45 degrees Celsius) and state of charge (25% to 95%).

Experimental findings show that the hybrid system has a peak output voltage of 12.6 V, 12.2 V in solar-only mode and 9.5 V in wind-only mode respectively, which is about 30 to 35 % higher than in the other two cases. Environmental factors that affect the system performance include changes in solar irradiance and wind speed which impact on energy generation. Further, the current implementation is on a scale of prototyping, and the losses in conversion of power in units like converters and rectifiers are not at the optimum level. Future directions will be to enhance energy prediction based on machine learning algorithms, conventional losses, battery management, and test the system in real-time driving situations to be able to implement the system at large scale.

ACKNOWLEDGMENT

The author expresses gratitude to Vel Tech Rangarajan Dr. Sagunthala R&D Institute of Science and Technology, Chennai, India for providing the laboratory facilities necessary for this research.

REFERENCES

[1] Devi, AC Nirmala, et al. "Automatic Wireless Power Hub for Electric Vehicles (EVs)." 2024 International Conference on Knowledge Engineering and Communication Systems (ICKECS). Vol. 1. IEEE, 2024.

[2] Santhoshkumar, R., et al. "Desisn and Implementation of Solar-Powered Electric Vehicle Charging Station with Automatic Billing System." 2024 IEEE 4th International Conference on Sustainable Energy and Future Electric Transportation (SEFET). IEEE, 2024.

[3] Pawar, Shital, et al. "Wireless E-Vehicle Charging Station with Automatic Billing System." 2025 3rd International Conference on Intelligent Cyber Physical Systems and Internet of Things (ICoICI). IEEE, 2025.

[4] Niu, Yitong, et al. "A photovoltaic electric vehicle automatic charging and monitoring system." 2022 International Symposium on Multidisciplinary Studies and Innovative Technologies (ISMSIT). IEEE, 2022.

[5] GS, Asha Rani, and Lal Priya PS. "Design of Automatic Charging System for Electric Vehicles using Rigid-Flexible Manipulator." IEEEE Xplore, ICPC2T (2022).

[6] Dhanasekar, R., et al. "E-bike using wireless charging and split battery with renewable energy." 2024 International Conference on Power, Energy, Control and Transmission Systems (ICPECTS). IEEE, 2024.

[7] Massmi, Karima, Khaled Hamouid, and Kamel Adi. "Secure electric vehicle dynamic charging based on smart contracts." 2023 International Symposium on Networks, Computers and Communications (ISNCC). IEEE, 2023.

[8] Tulon, Tanima Ahamed, et al. "Designing a Bidirectional Isolated DC/DC Converter for EV with Power Back Operation for Efficient Battery Charging During Neutral Run." 2022 International Conference on Energy and Power Engineering (ICEPE). IEEE, 2022.

[9] Tiwari, Priyanka, and Deepak Ronanki. "Cyber-resilient grid-interactive renewable powered wireless charging of electric vehicles." 2022 IEEE International Conference on Power Electronics, Drives and Energy Systems (PEDES). IEEE, 2022.

[10] Karthikeyan, M. P., et al. "Smart Electric Vehicle Charging System Using RFID." 2023 International Conference on Research Methodologies in Knowledge Management, Artificial Intelligence and Telecommunication Engineering (RMKMATE). IEEE, 2023.

[11] Moholkar, Vijayanand S. "Comparative assessment of global warming potential of gasoline, battery, and hybrid vehicles in India." Renewable and Sustainable Energy Reviews 207 (2025): 114951.

[12] Moholkar, Vijayanand S. "Comparative life cycle analysis of hydrogen fuel cell electric vehicles and battery electric vehicles: An Indian perspective." International Journal of Hydrogen Energy 103 (2025): 729-739.

[13] Patil, Dhanesh Subhash. "Comparative Analysis of the Total Cost of Ownership (TCO) Between Electric Vehicles (EVs), Hybrid Electric Vehicles (HEVs) and Internal Combustion Engine (ICE) Vehicles in India." TANGENCE (2026): 140-147.

[14] Nandola, Yash, et al. "Well–to–wheel analysis of energy efficiency & CO2 emissions for hybrids & EVs in India: Current trends & forecasting for 2030." Energy (2025): 139427.

[15] Kaur, Jagdeep, Manpreet Singh Manna, and Abinash Singh. "An Overview and Investigational Survey of Existing Electric Vehicles." 2025 International Conference on Emerging Systems and Intelligent Computing (ESIC). IEEE, 2025.