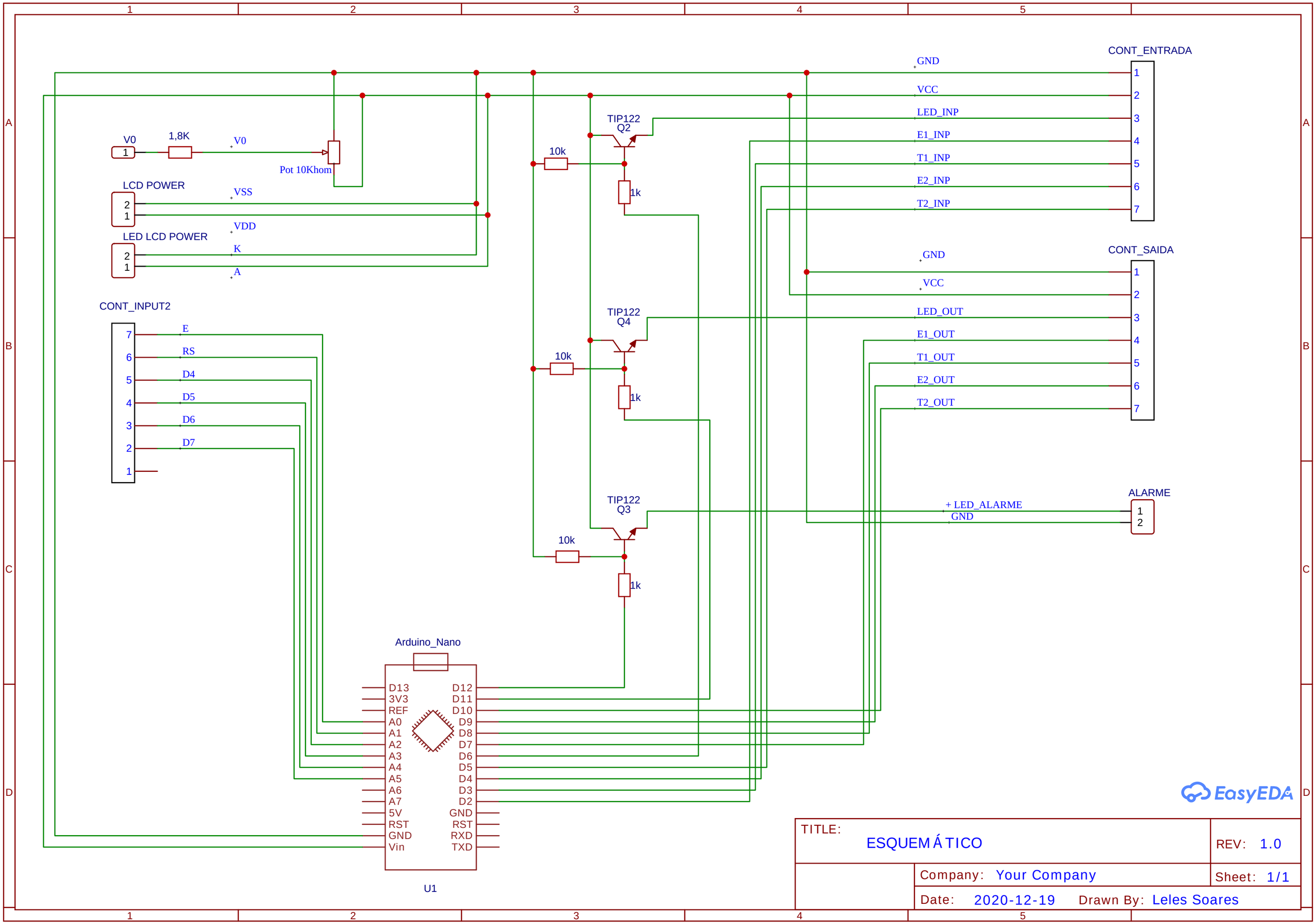
CONT_ENTRADA
GND
VCC
LED_INP
E1_INP
T1_INP
E2_INP
T2_INP
CONT_SAIDA
GND
VCC
LED_OUT
E1_OUT
T1_OUT
E2_OUT
T2_OUT
ALARME
+ LED_ALARME
GND
TIP122
Q2
TIP122
Q4
TIP122
Q3
10k
1k
V0
1,8K
Pot 10Khom
LCD POWER
VSS
VDD
LED LCD POWER
K
A
CONT_INPUT2
E
RS
D4
D5
D6
D7
Arduino_Nano
D13
3V3
REF
A0
A1
A2
A3
A4
A5
A6
A7
5V
RST
GND
Vin
D12
D11
D10
D9
D8
D7
D6
D5
D4
D3
D2
GND
RST
RXD
TXD
U1
EasyEDA
TITLE:
ESQUEMÁTICO
REV: 1.0
Company: Your Company
Sheet: 1/1
Date: 2020-12-19
Drawn By: Leles Soares