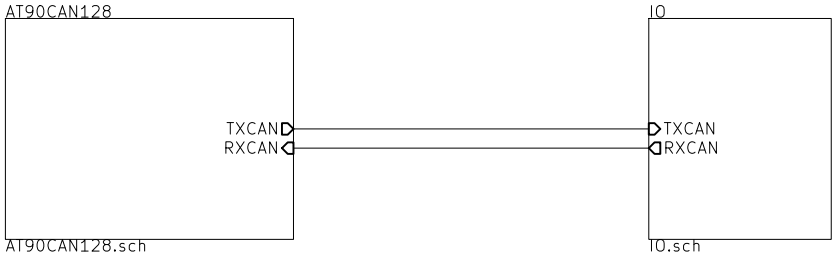

LOGO1

CC-BY-NC-SA

LOGO2

OPEN_HARDWARE_1

LOGO3

LEMBED

CC-BY-NC-SA
http://community.lembed.com/

Sheet: /
File: canduino.sch

Title:

Size: A4	Date: lun. 30 mars 2015	**Rev: 0.1**
KiCad E.D.A. kicad (2015-09-09 BZR 6176, Git 1d4a46d)-product		Id: 1/3

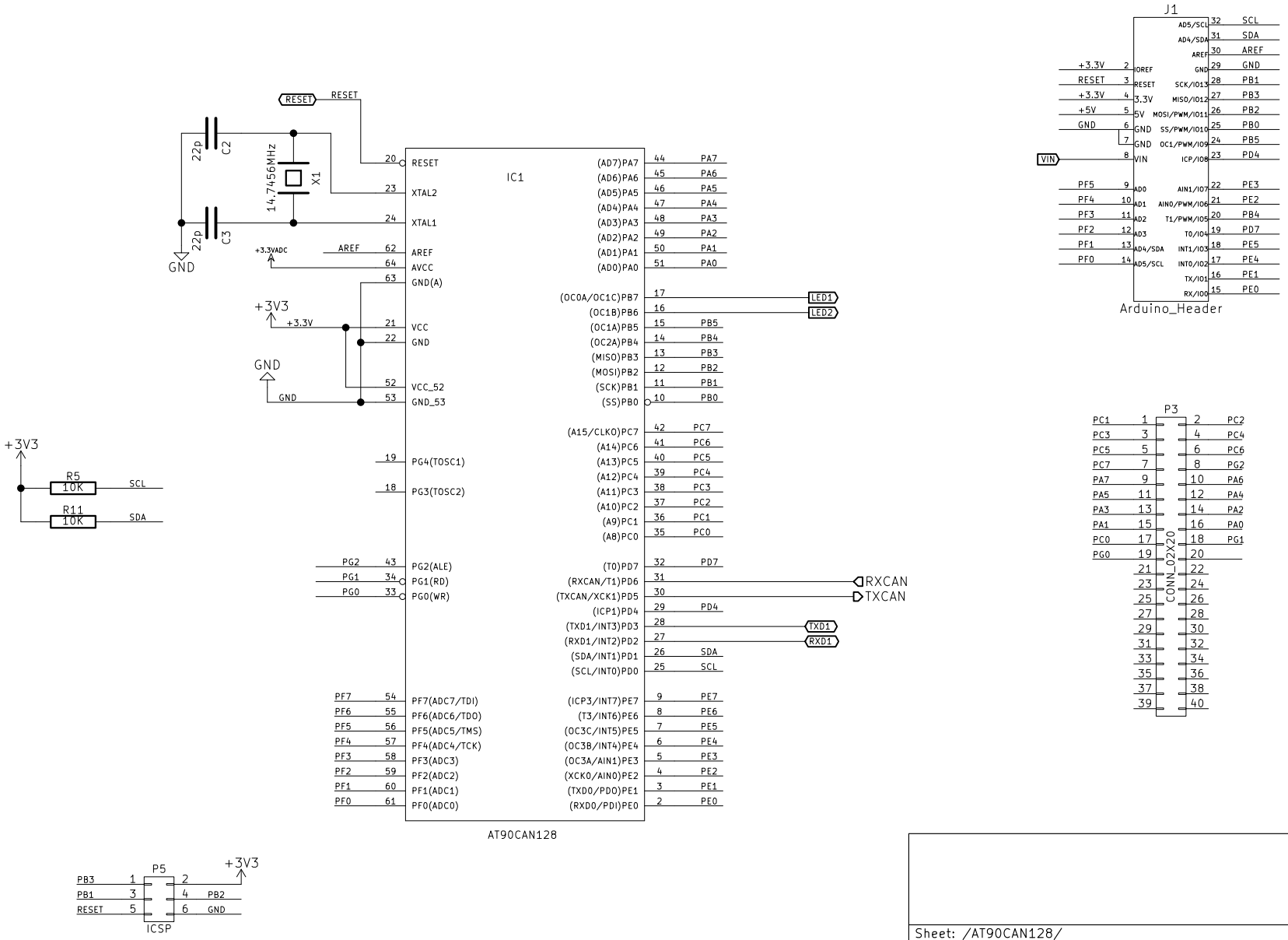

Sheet: /AT90CAN128/
File: AT90CAN128.sch

Title:

Size: A4	Date:	**Rev:**
KiCad E.D.A. kicad (2015-09-09 BZR 6176, Git 1d4a46d)-product		Id: 2/3

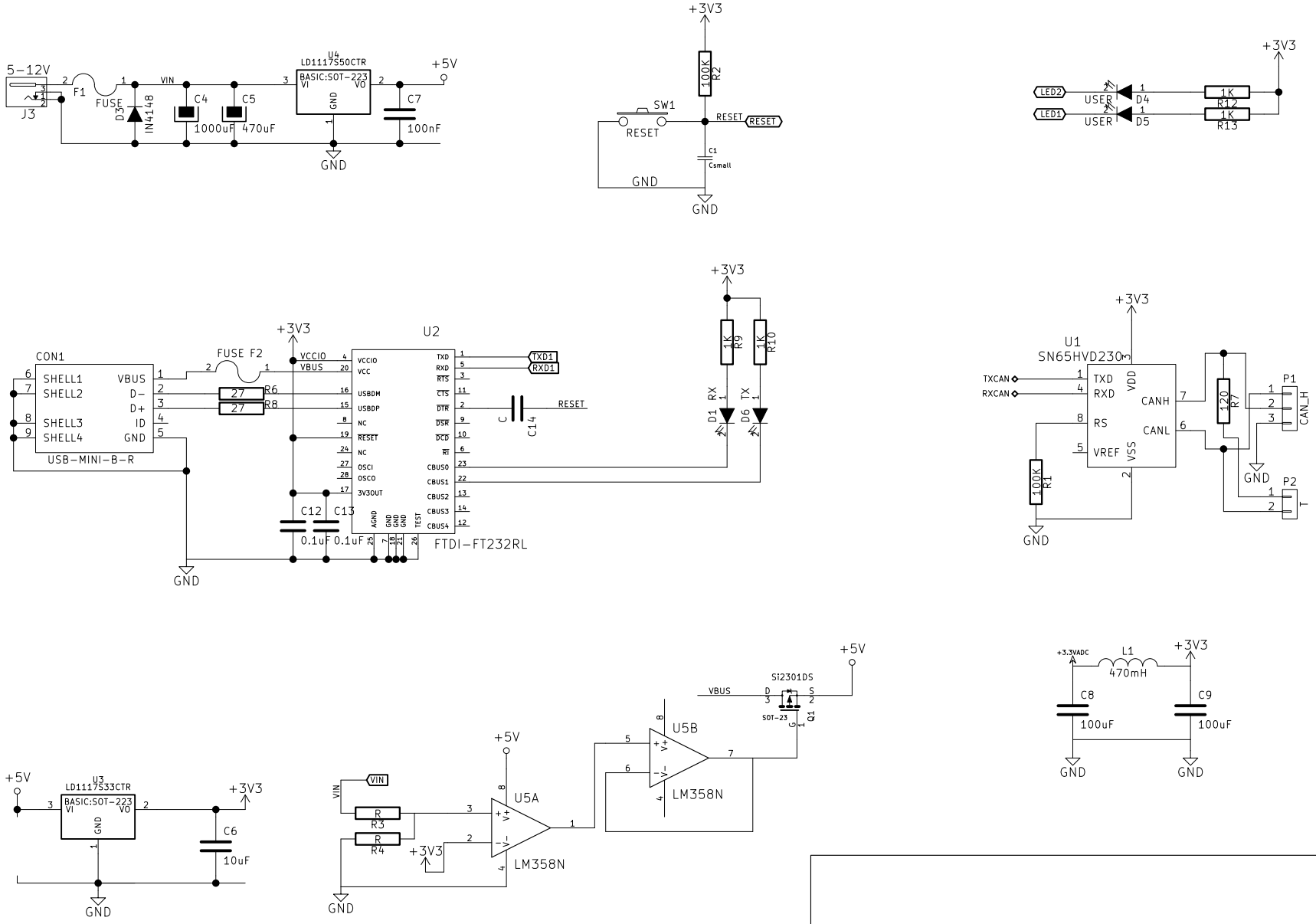

Sheet: /IO/
File: IO.sch

Title:

Size: A4	Date:	Rev:
KiCad E.D.A. kicad (2015-09-09 BZR 6176, Git 1d4a46d)-product		Id: 3/3