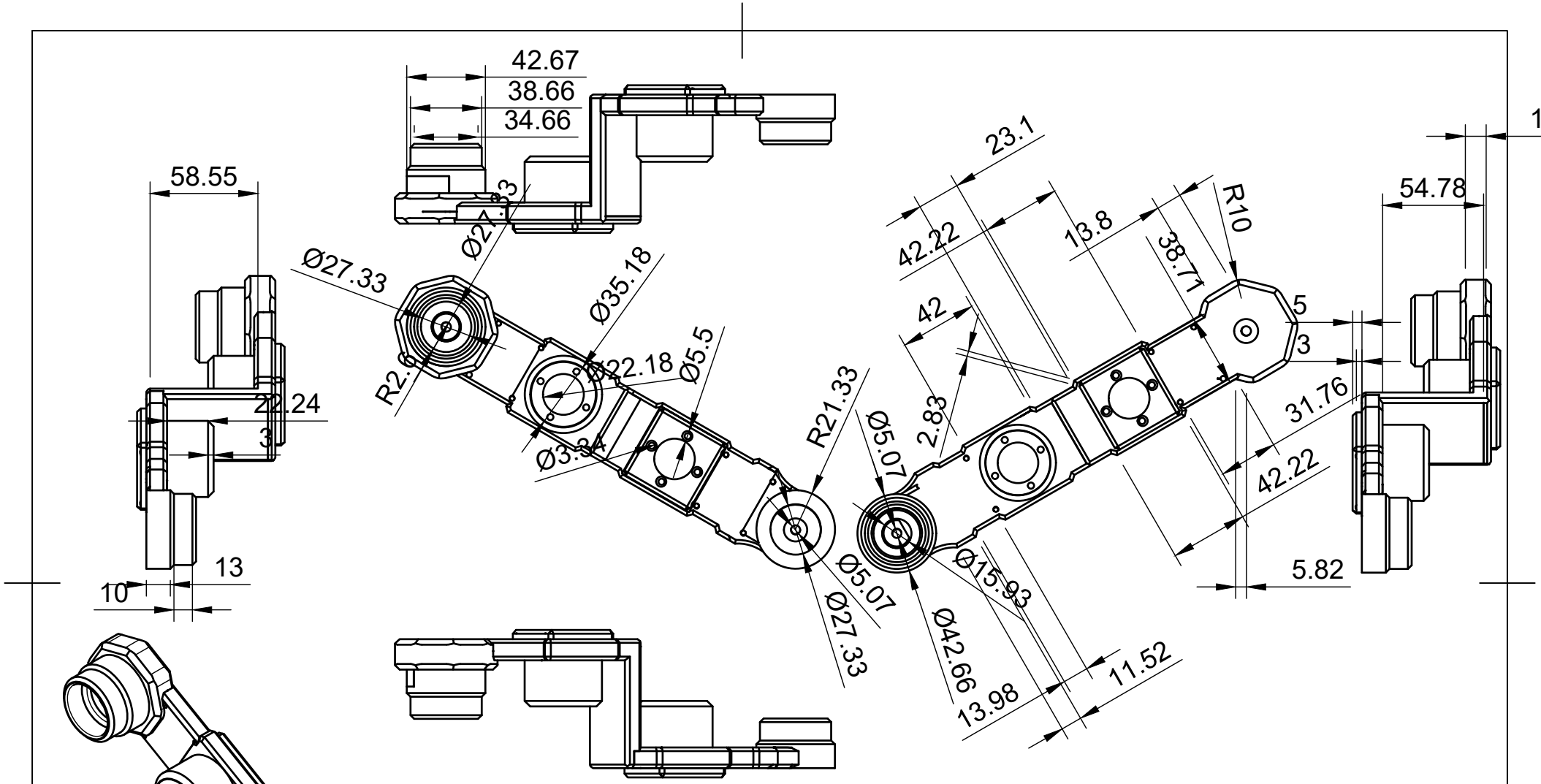

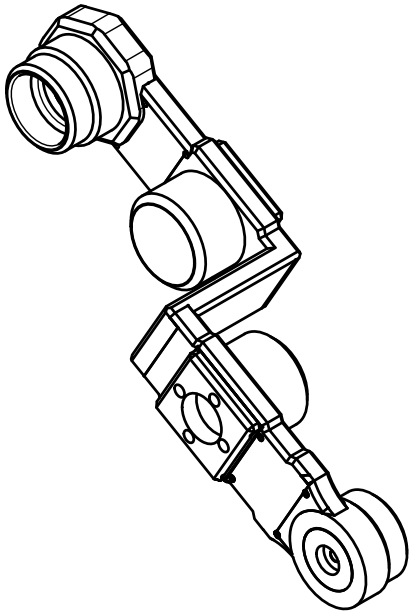

Dept.	Technical reference	Created by	Approved by
		lucas lenarcic 03.03.2022	Lucas Lenarcic 03.03.2022
		Document type: Technical Drawing	Document status
		Title: Arm Axis 2 & 3 Robotic Arm	DWG No. 5
			Rev. V0.1 / Date of issue 03.03.2022 / Sheet 1/1