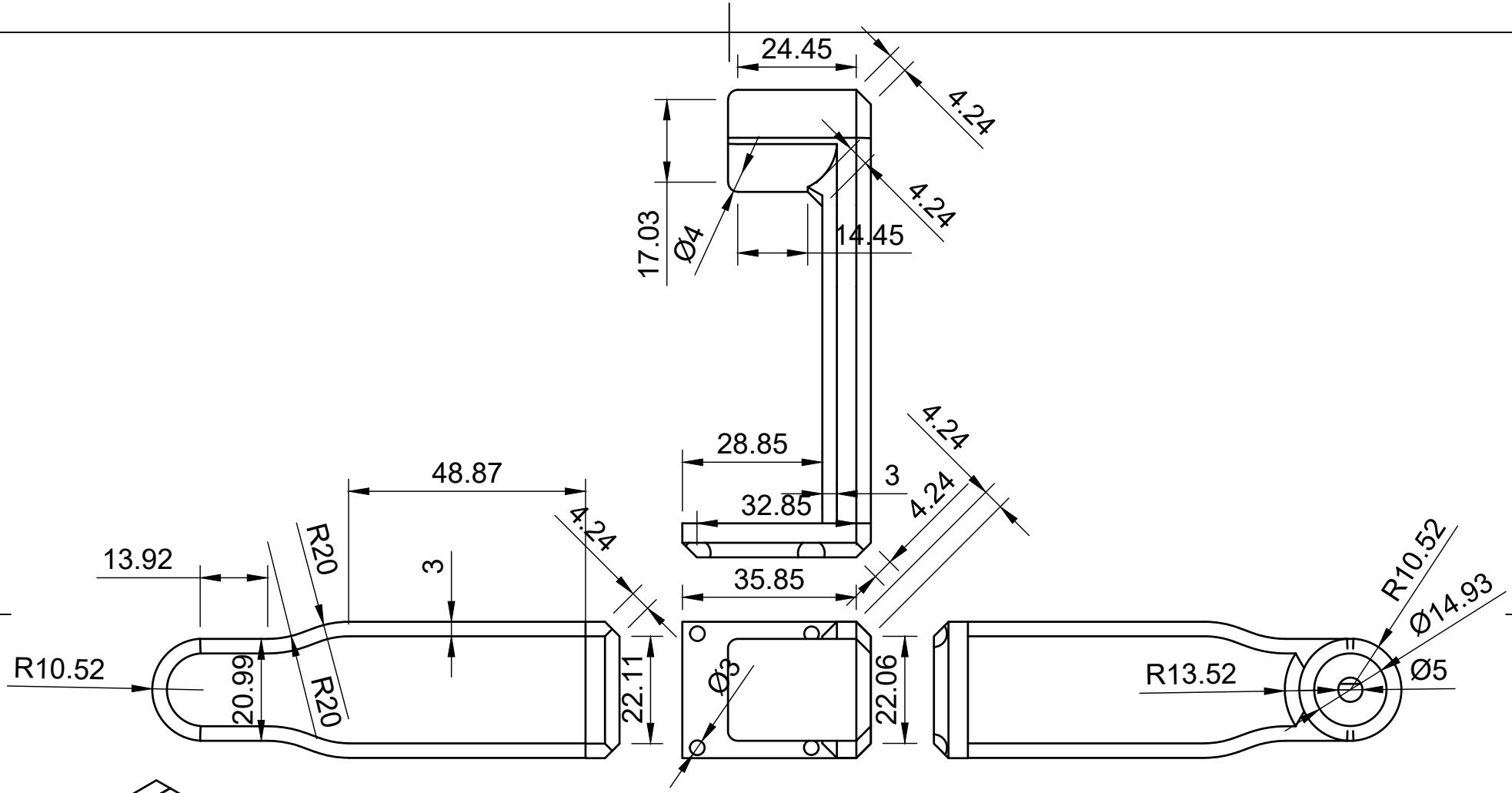

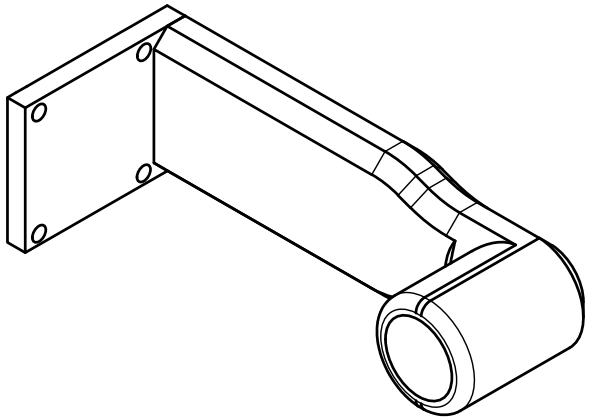

Dept.	Technical reference	Created by	Approved by
		lucas lenarcic 03.03.2022	Lucas Lenarcic 03.03.2022
		Document type: Technical Drawing	Document status
		Title: Arm Axis 6 Robotic Arm	DWG No.: 8
			Rev.: V0.1 · Date of issue: 03.03.2022 · Sheet: 1/1