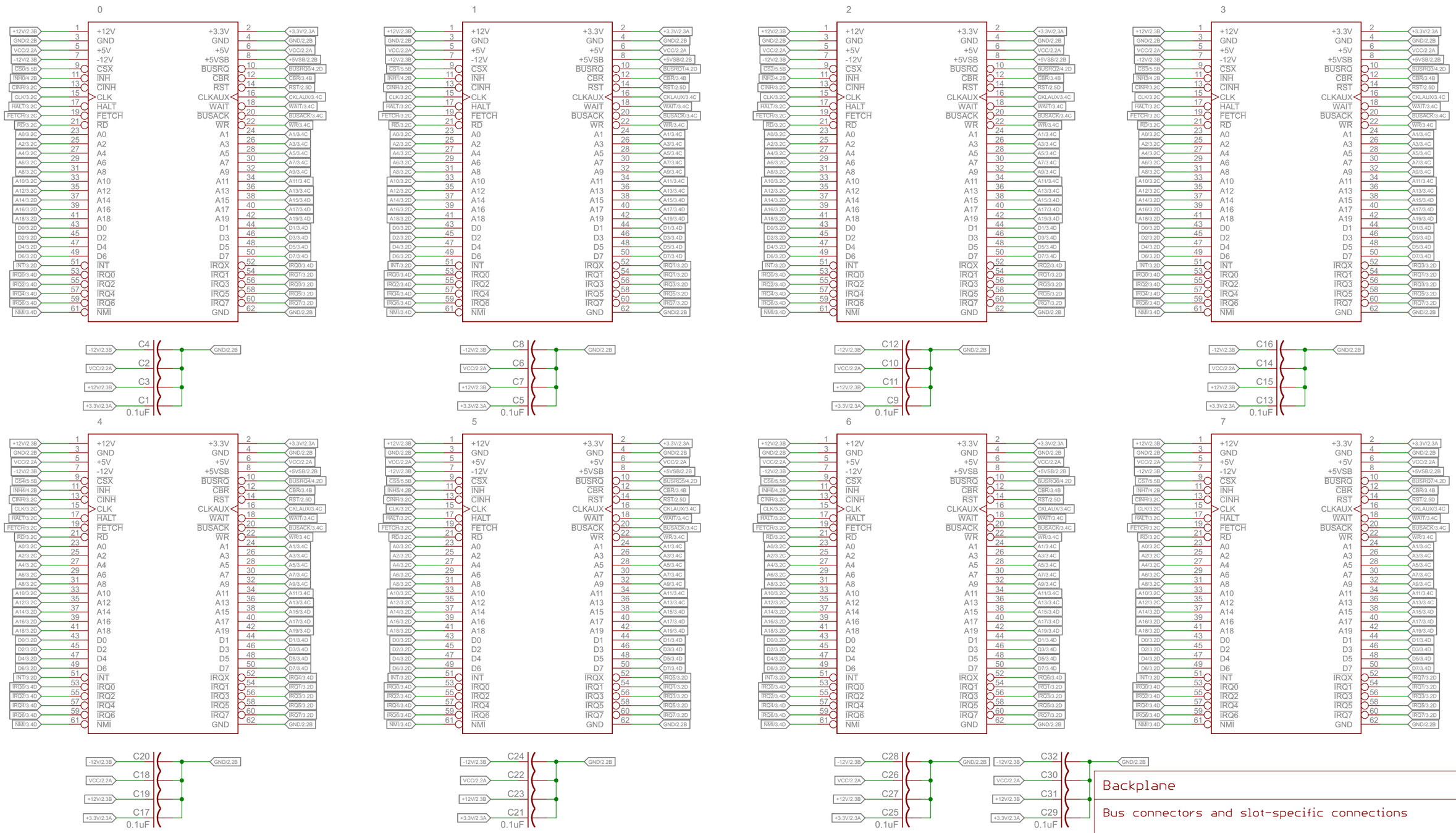

Backplane

Bus connectors and slot-specific connections

Project: XMICRO-BP8	Chris Weir
V1.0 5/27/2019 10:31:49 PM	Sheet:1/5

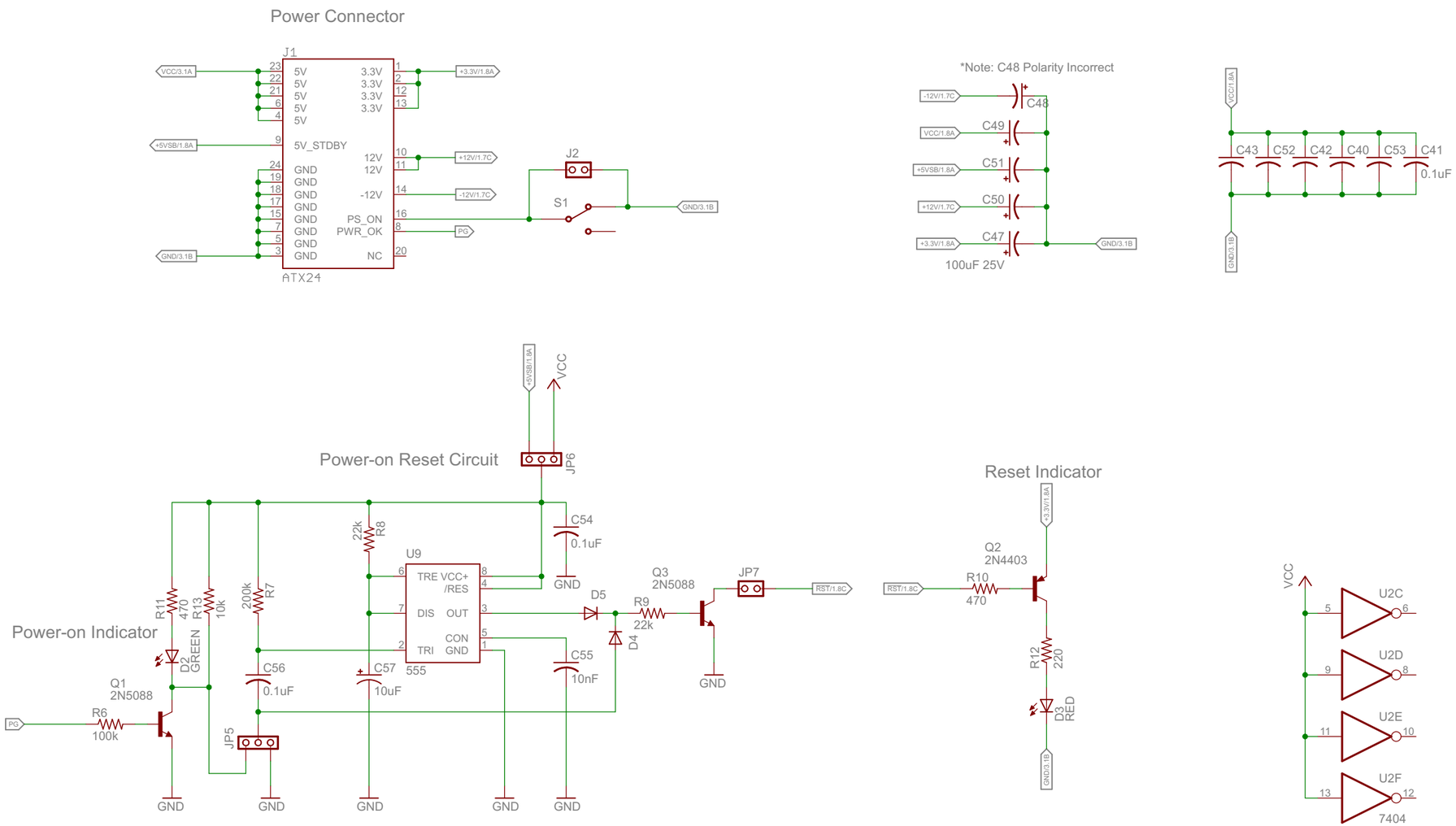

Power/Reset

Power input and power-on reset circuit
Misc. capacitors and extra gates

Project: XMICRO-BP8	Chris Weir
V1.0.1 5/27/2019 10:31:49 PM	Sheet:2/5