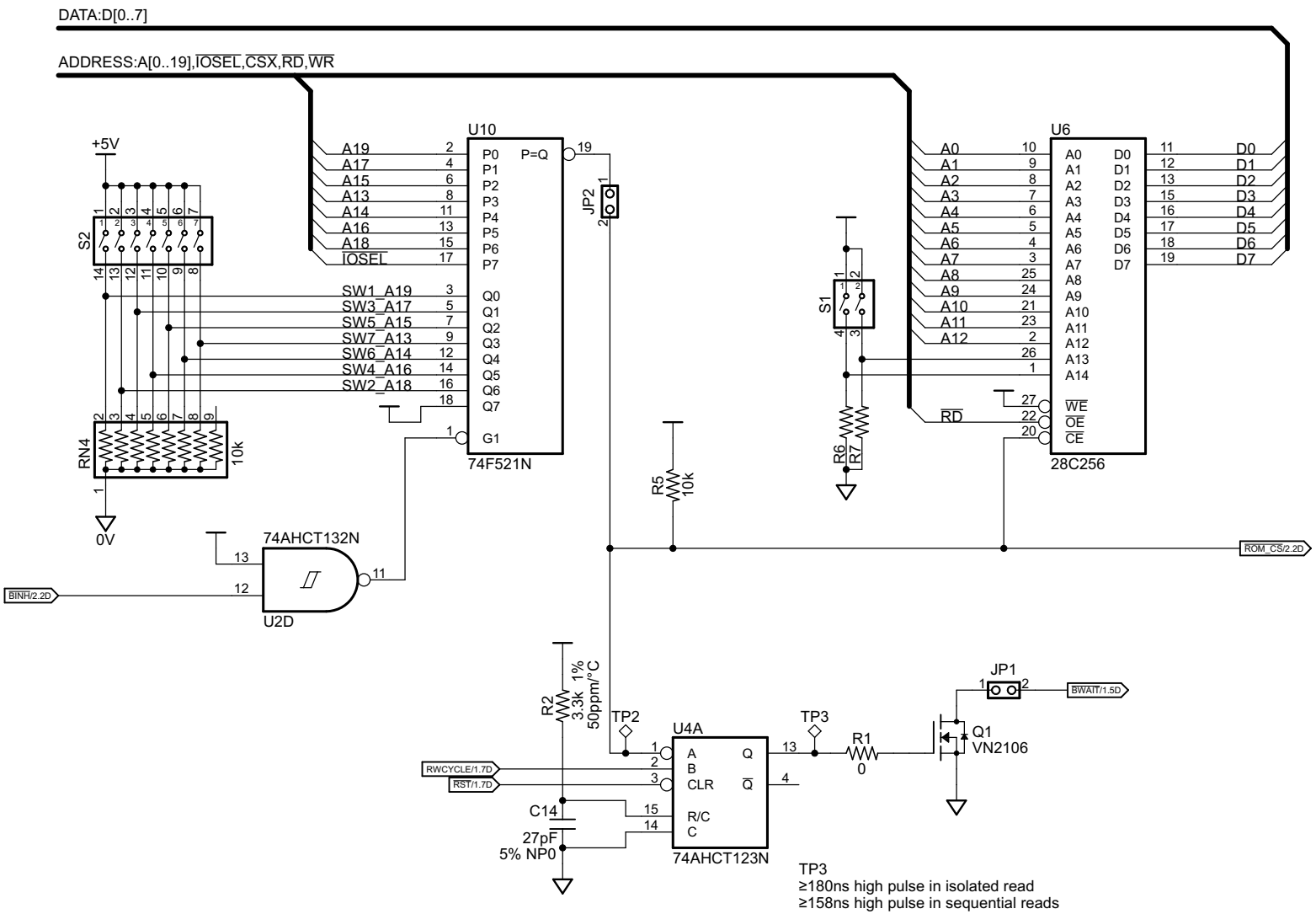

Title: ROM		XMICRO
Project: XMICRO-MEMORY		Revision: 1.0
Drawn by: Chris Weir	2024-04-06 11:47:29	Sheet: 3/3