REVISION RECORD			
LTR	ECO NO:	APPROVED:	DATE:

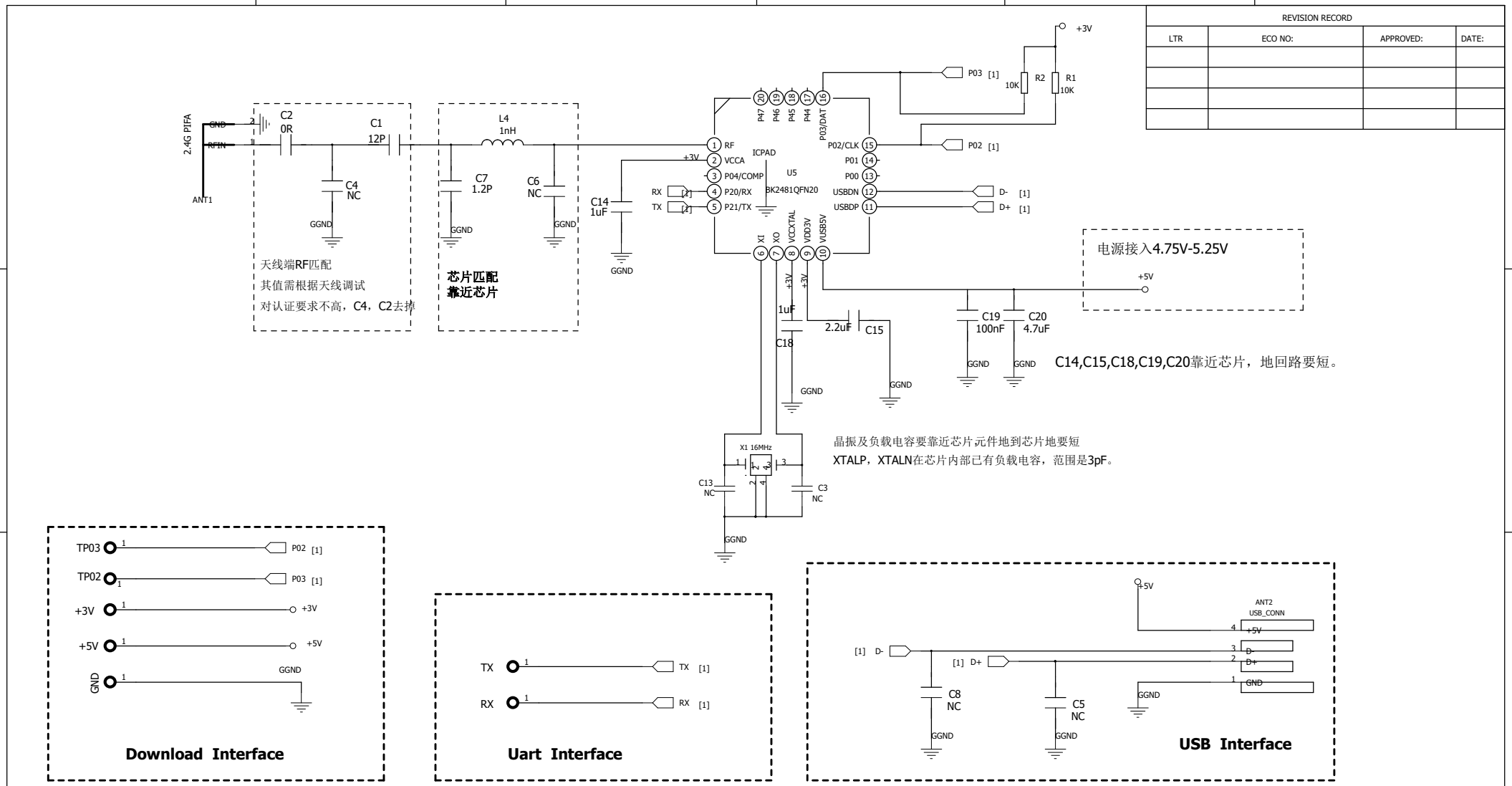

DRAWN:	DATED:
CHECKED:	DATED:
QUALITY CONTROL:	DATED:
RELEASED:	DATED:

COMPANY:

TITLE: BK2481 QFN20 Dongle

CODE:	SIZE:	DRAWING NO:	REV:
	B	2022-01-18	V1

SCALE: SHEET: 1 OF 1

File: