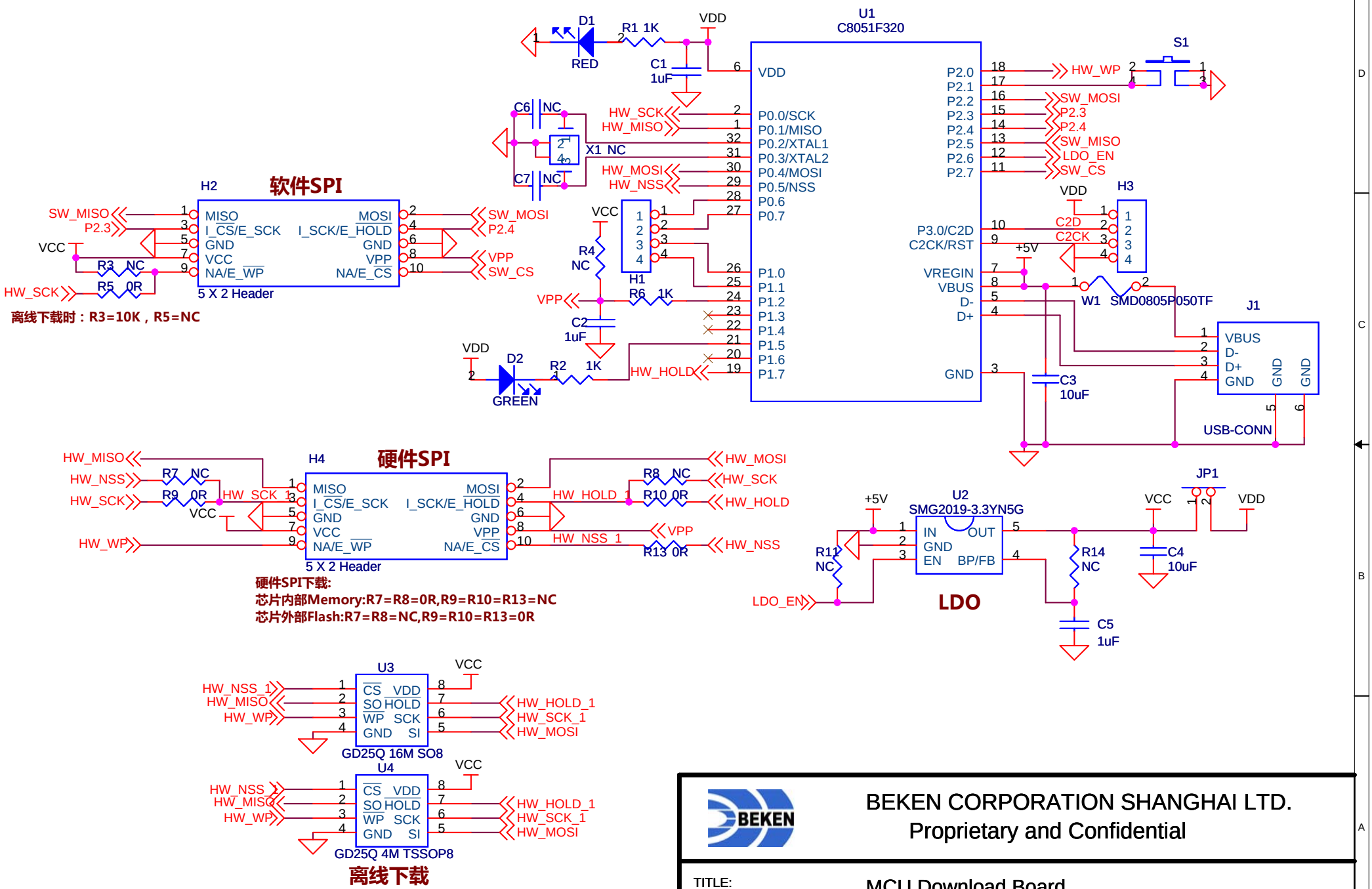

BEKEN CORPORATION SHANGHAI LTD.
Proprietary and Confidential

TITLE:	MCU Download Board		
SIZE: A	FILENAME: MCU FOR DOWNLOAD	REV:	6.0
DRN: Qunshan	CHK: Beken	APPR:	Beken
CRD:	UPD: Wednesday, December 28, 2016	SHEET:	1 of 1