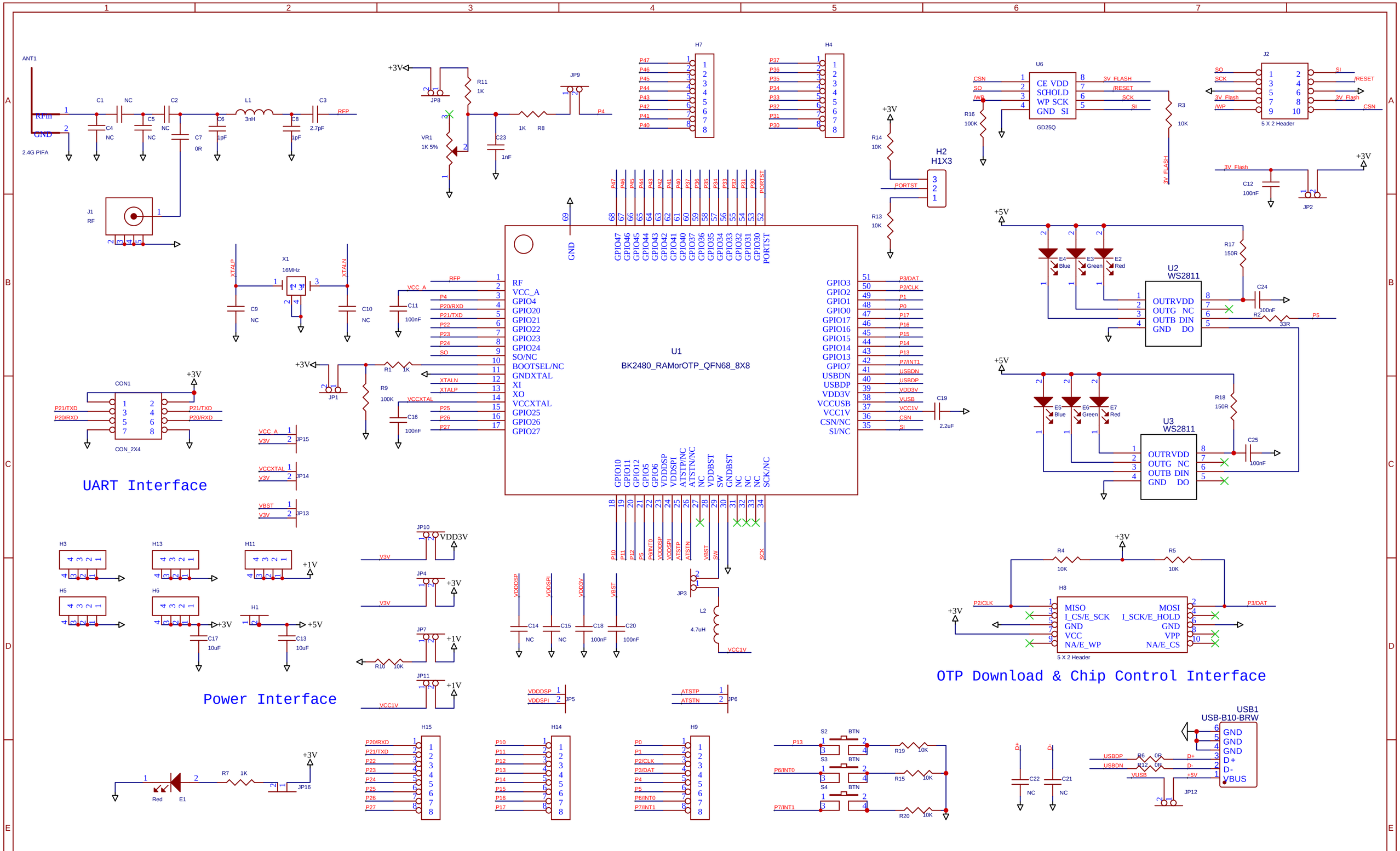

TITLE: BK2480_evb_ram(otp)_v1	REV: 1.0
BEKEN Company: Beken Corporation	Sheet: 1/1
Date: 2021-08-16 Drawn By: yanfeng.wang	