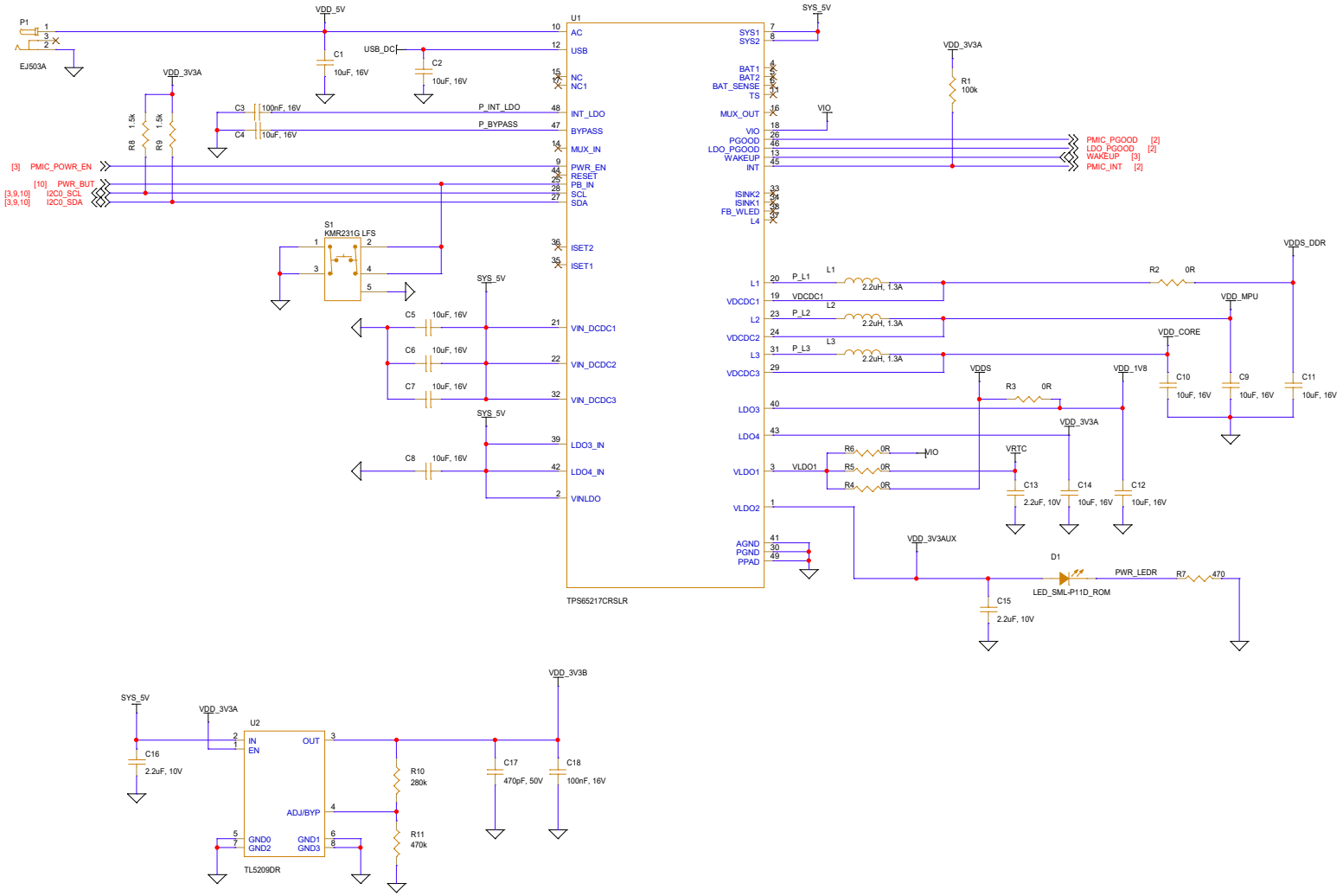

Title	<Title>	
Size C	Document Number <Doc>	Rev <RevCode>
Date: Monday, May 04, 2026	Sheet 1 of 1	

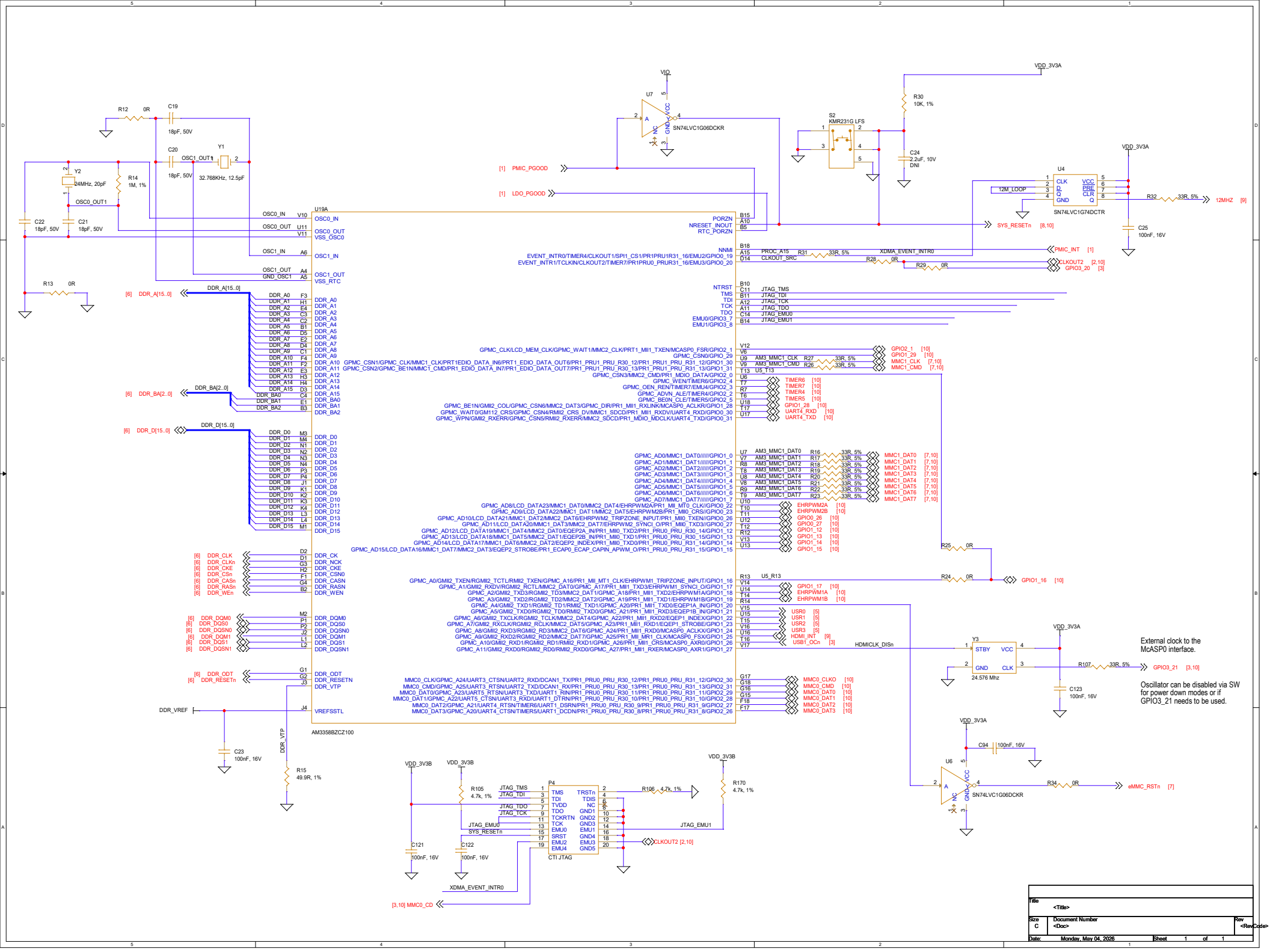
U19A
AM3358BZCZ100
U7
SN74LVC1G06DCKR
U4
SN74LVC1G74DCTR
U6
SN74LVC1G06DCKR
Y3
24.576 Mhz
P4
CTI JTAG
S2
KMR231G LFS
Y1
32.768KHz, 12.5pF
Y2
24MHz, 20pF
VDD_3V3A
VDD_3V3B
VIO
DDR_VREF
DDR_VTP
PMIC_PGOOD
LDO_PGOOD
SYS_RESETn
PMIC_INT
CLKOUT2
12MHZ
eMMC_RSTn
GPIO3_21
HDMICLK_DISn
JTAG_EMU1
XDMA_EVENT_INTR0
MMC0_CD
External clock to the McASP0 interface.
Oscillator can be disabled via SW for power down modes or if GPIO3_21 needs to be used.
Title
<Title>
Size C
Document Number
<Doc>
Rev
<RevCode>
Date: Monday, May 04, 2026
Sheet 1 of 1

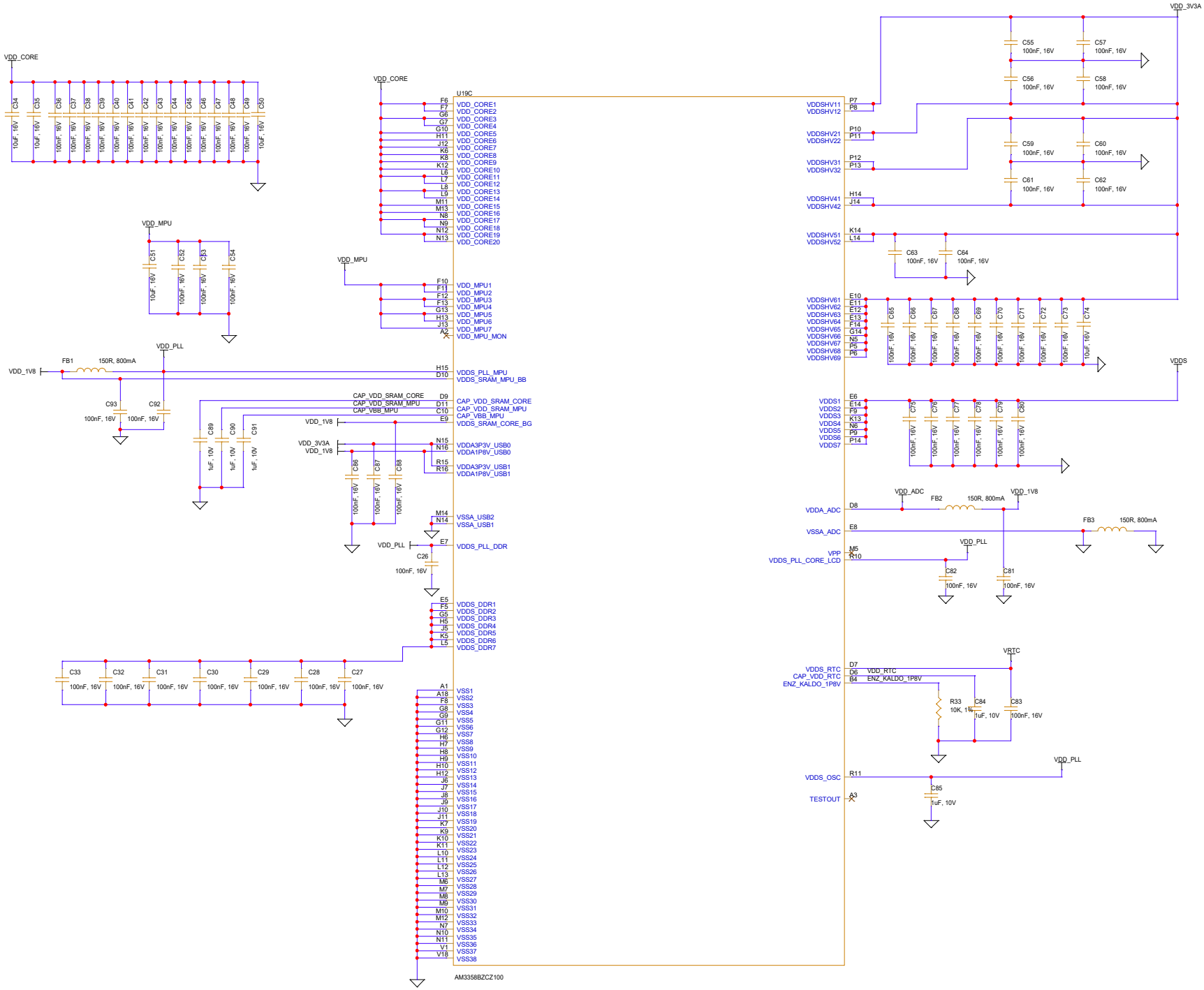

Title	<Title>	
Size C	Document Number <Doc>	Rev <RevCode>
Date: Monday, May 11, 2026	Sheet 1 of 1	

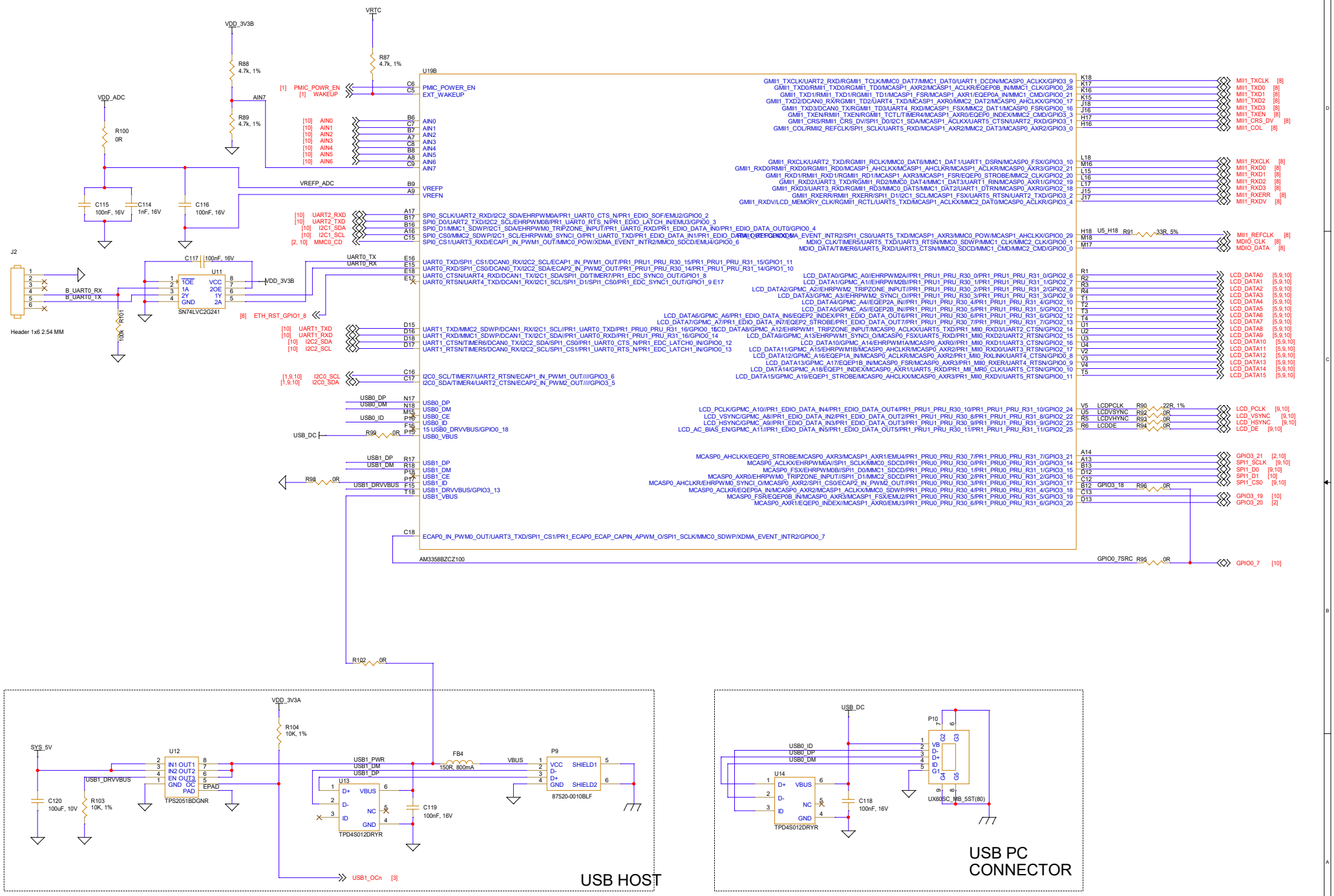

Title	<Title>		
Size C	Document Number <Doc>		Rev <RevCode>
Date: Sunday, May 10, 2026		Sheet 1 of 1	

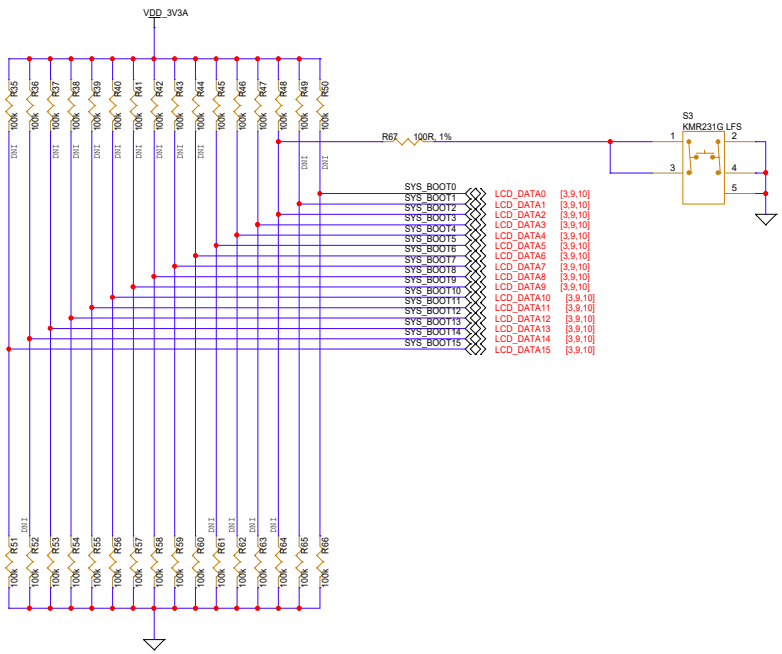

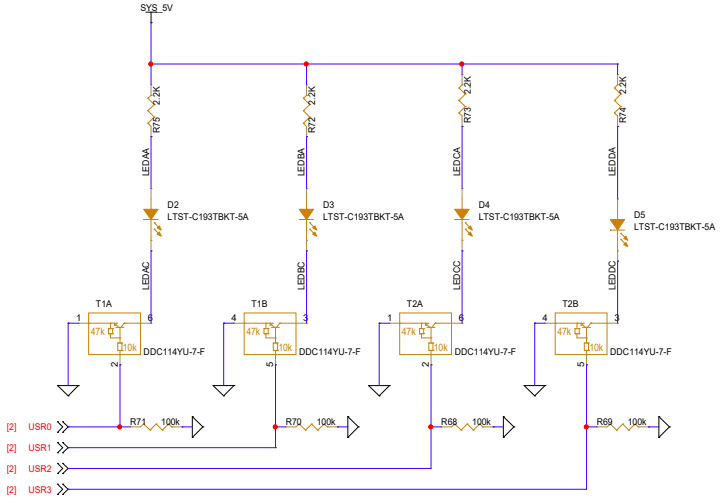

Title	<Title>	
Size C	Document Number <Doc>	Rev <RevCode>
Date: Tuesday, May 12, 2026	Sheet 1 of 1	

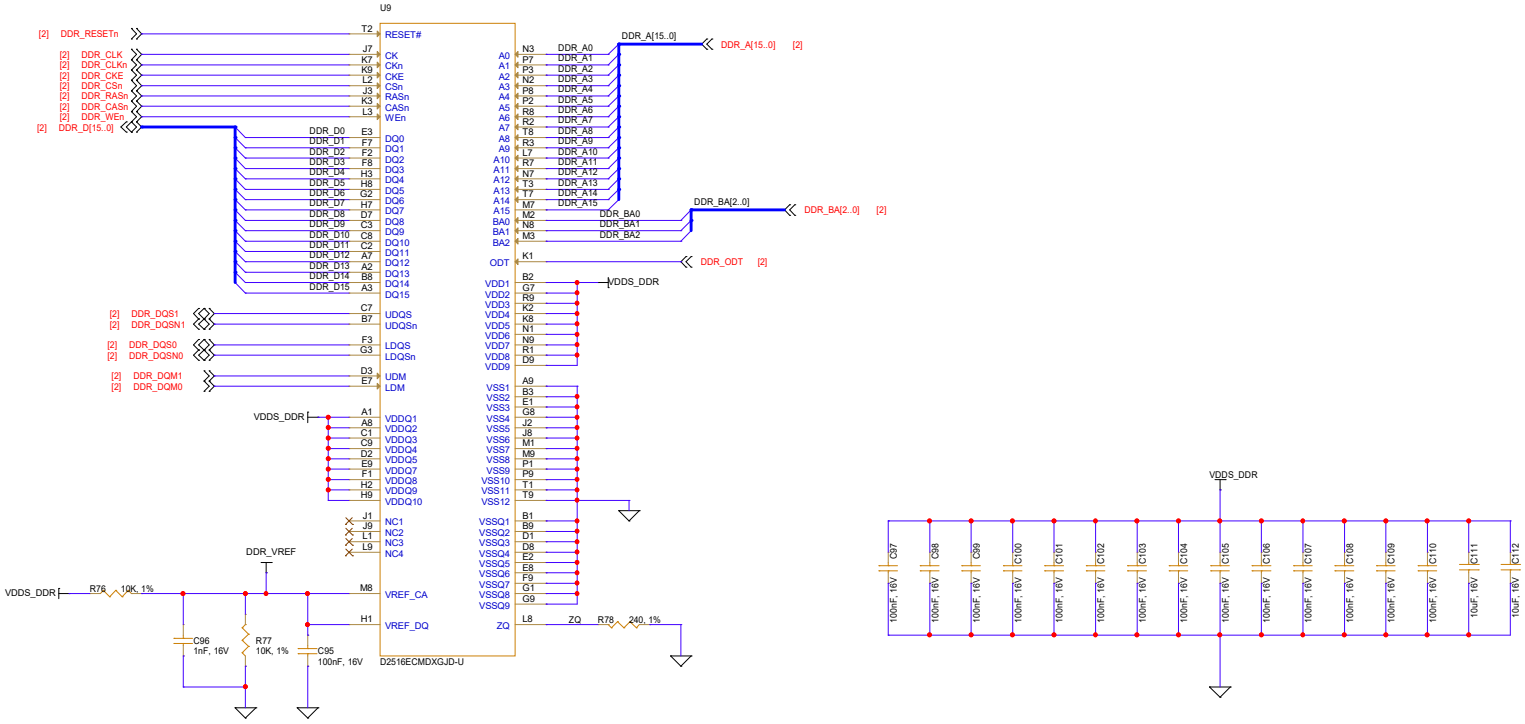

Title		
	<Title>	
Size C	Document Number <Doc>	Rev <RevCode>
Date: Monday, May 11, 2026	Sheet 1 of 1	

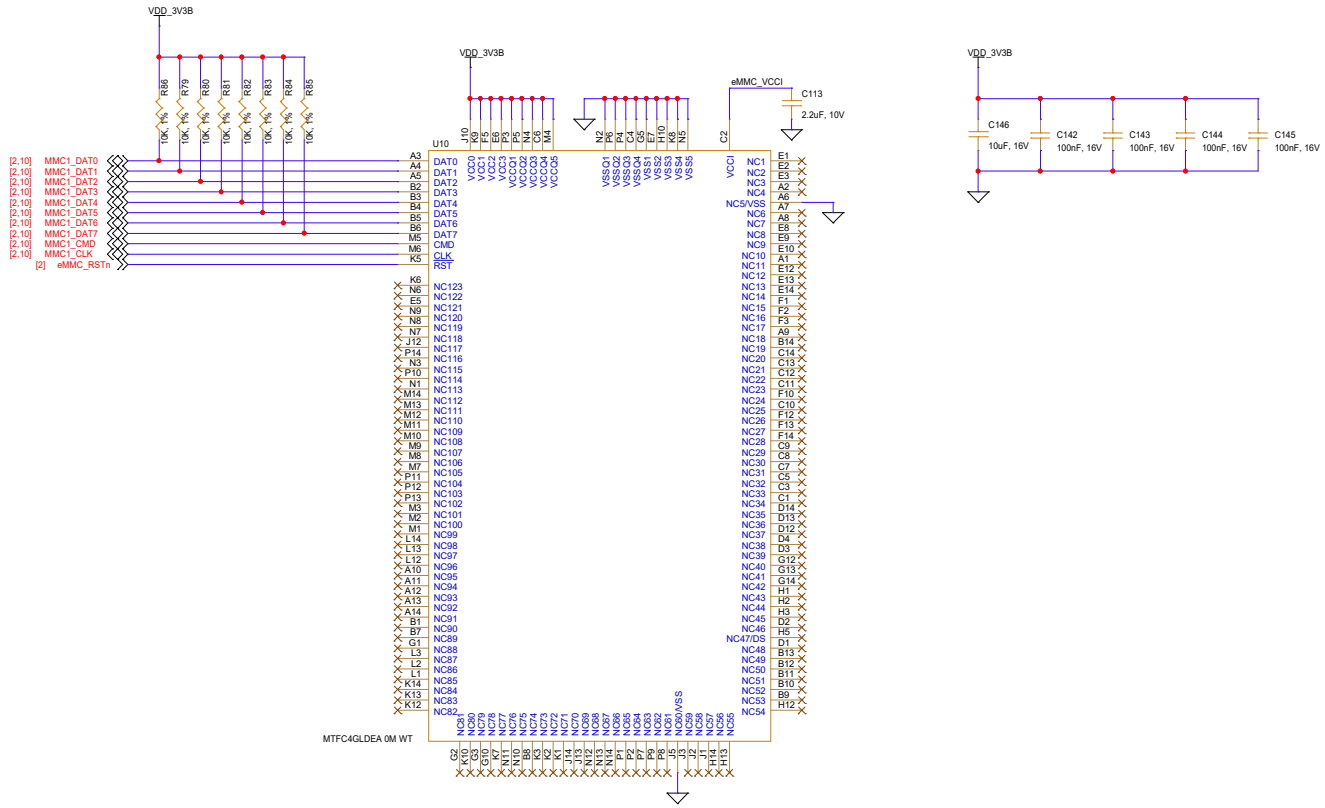

Title	<Title>		
Size C	Document Number <Doc>		Rev <RevCode>
Date: Tuesday, May 12, 2026	Sheet 1 of 1		

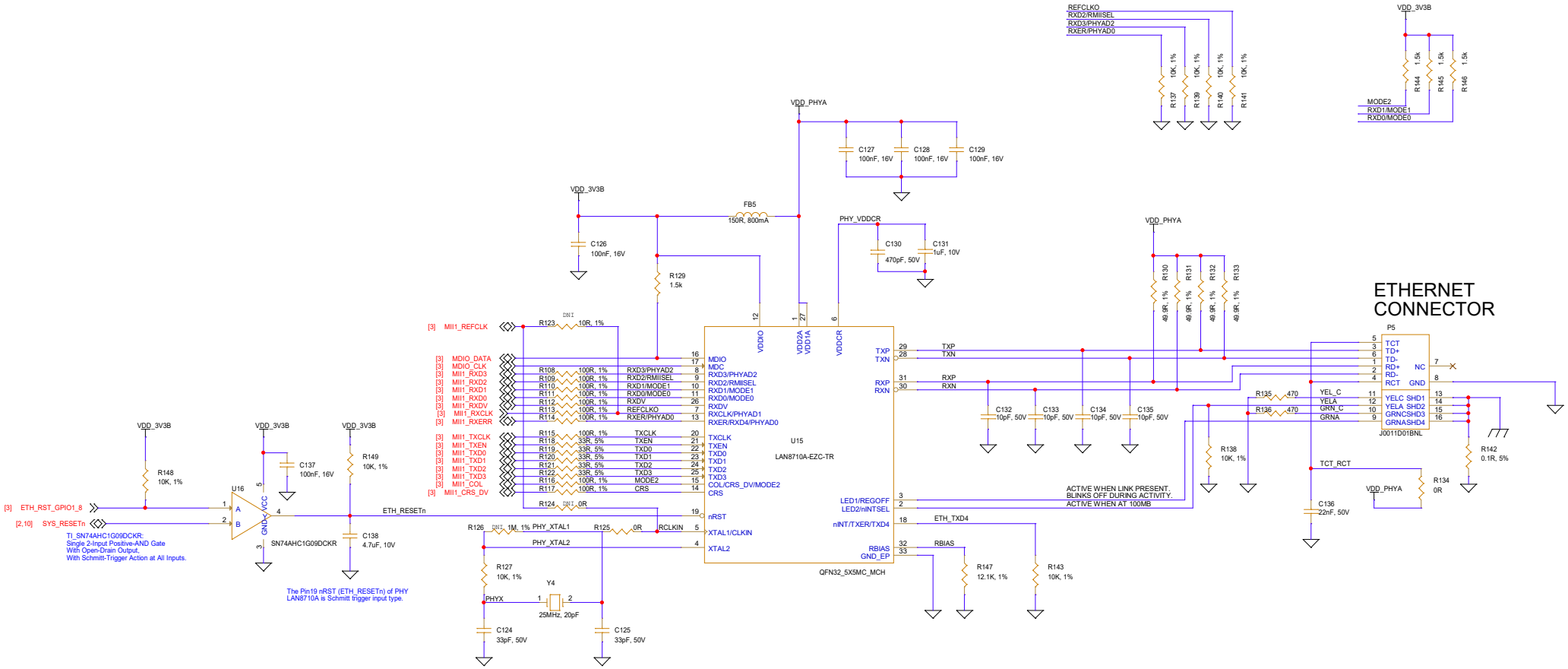

Title	<Title>
Size C	Document Number <Doc>
Rev	<RevCode>
Date: Tuesday, May 12, 2026	Sheet 1 of 1

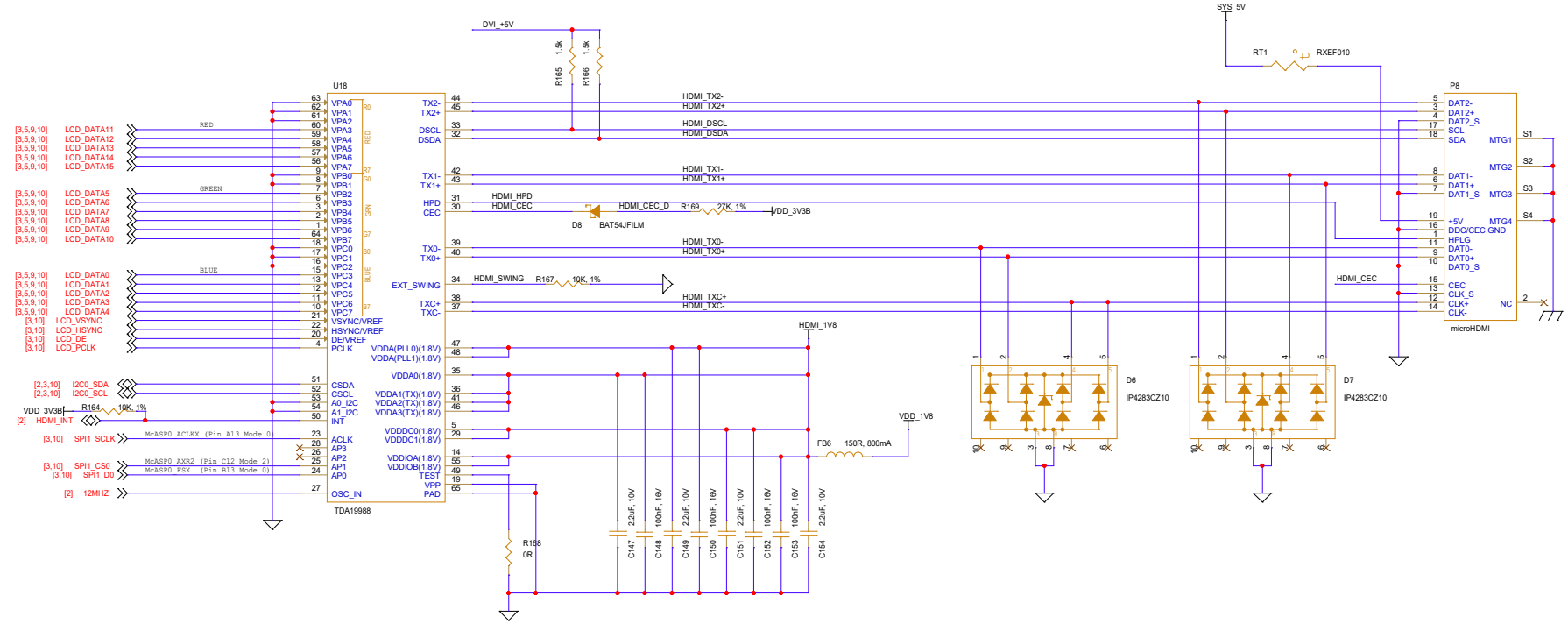

Title	<Title>
Size C	Document Number <Doc>
Rev	<RevCode>
Date: Tuesday, May 12, 2026	Sheet 1 of 1

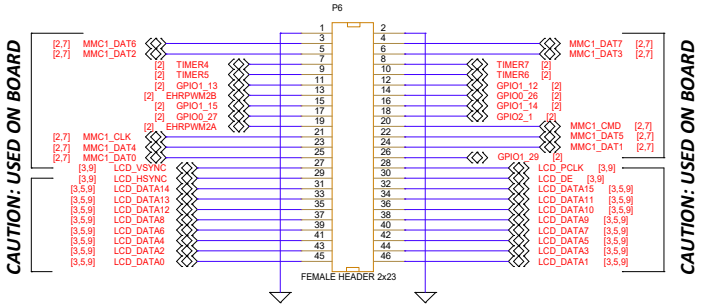

EXPANSION HEADER

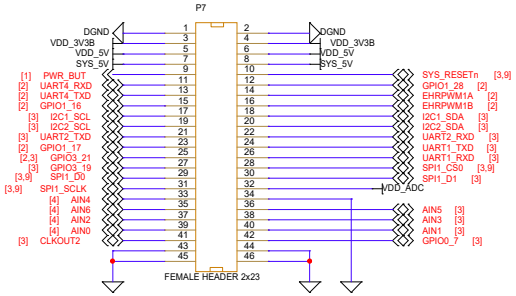

EXPANSION HEADER

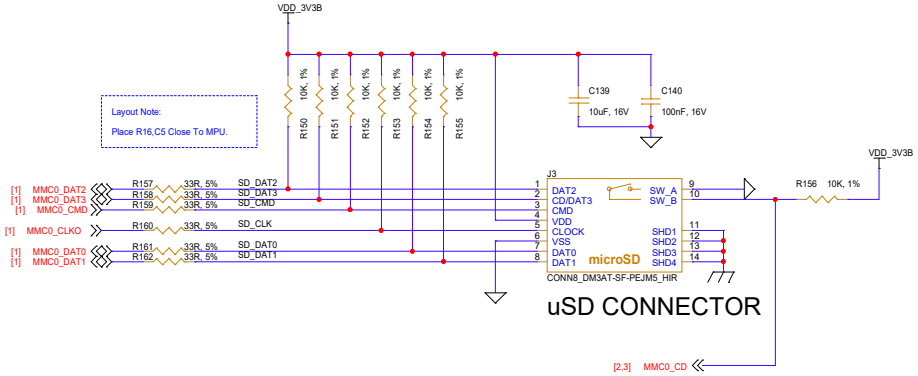

uSD CONNECTOR

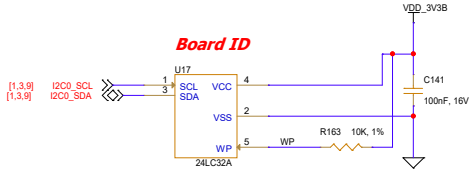

Title	<Title>	
Size C	Document Number <Doc>	Rev <RevCode>
Date: Monday, May 11, 2026	Sheet 1 of 1	