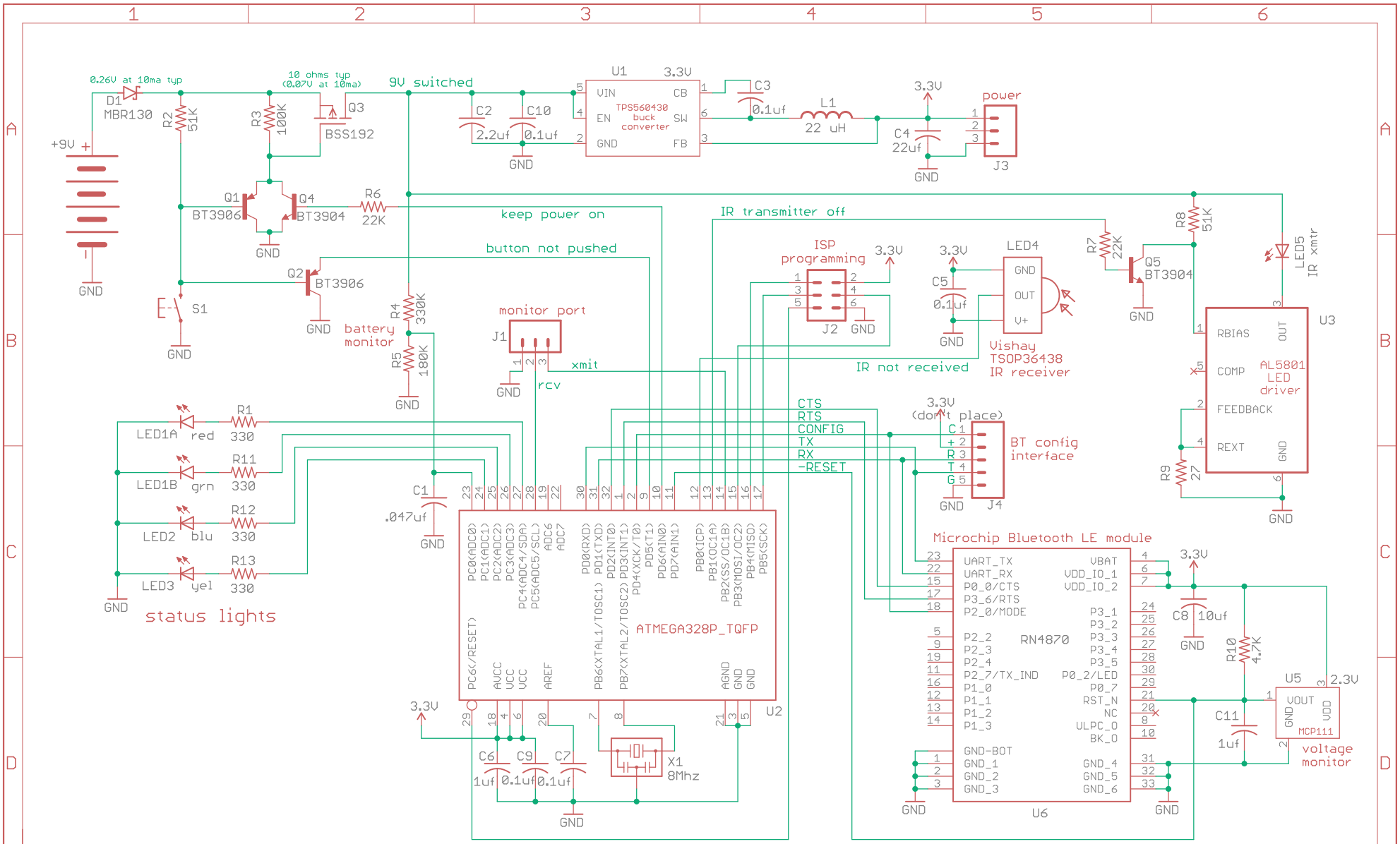

change log

30 Oct 2016, L. Shustek
V1.0

28 July 2019, L. Shustek
V2.0: external power jack; one IR transmitter; it and receiver closer to edge;
PCB soldered directly onto battery conacts

1 April 2020, L. Shustek
V3.0: new enclosure, SMDs, 328 processor, Microchip radio, etc.

RETROTOPE

WalkSensor_V3.0

Len Shustek

REV:

Date: 5/17/2020 2:22 PM

Sheet: 1/1