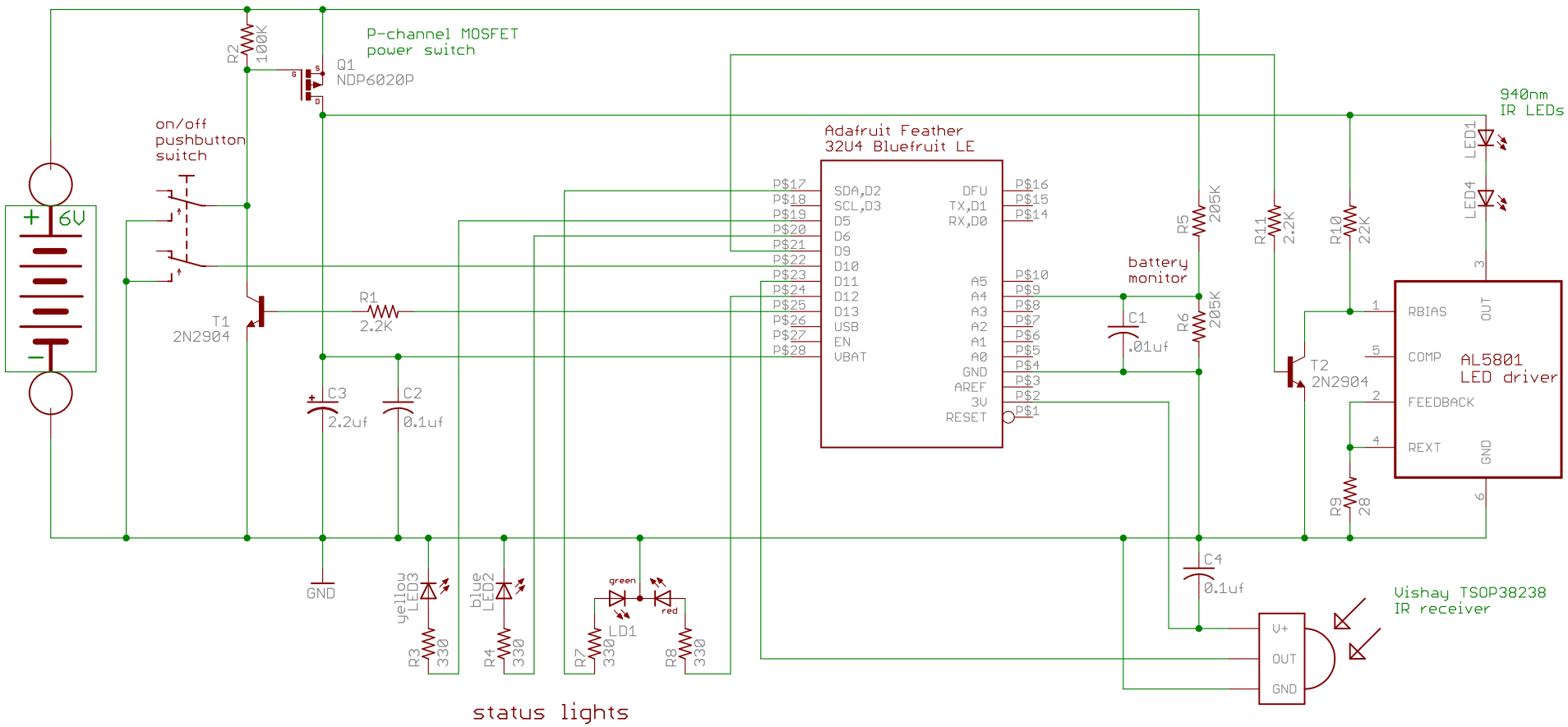

change log

30 Oct 2016, L. Shustek, first version

RETROTOPE

WalkSensor

Len Shustek

REV:

Date: 11/9/2016 9:09 PM

Sheet: 1/1