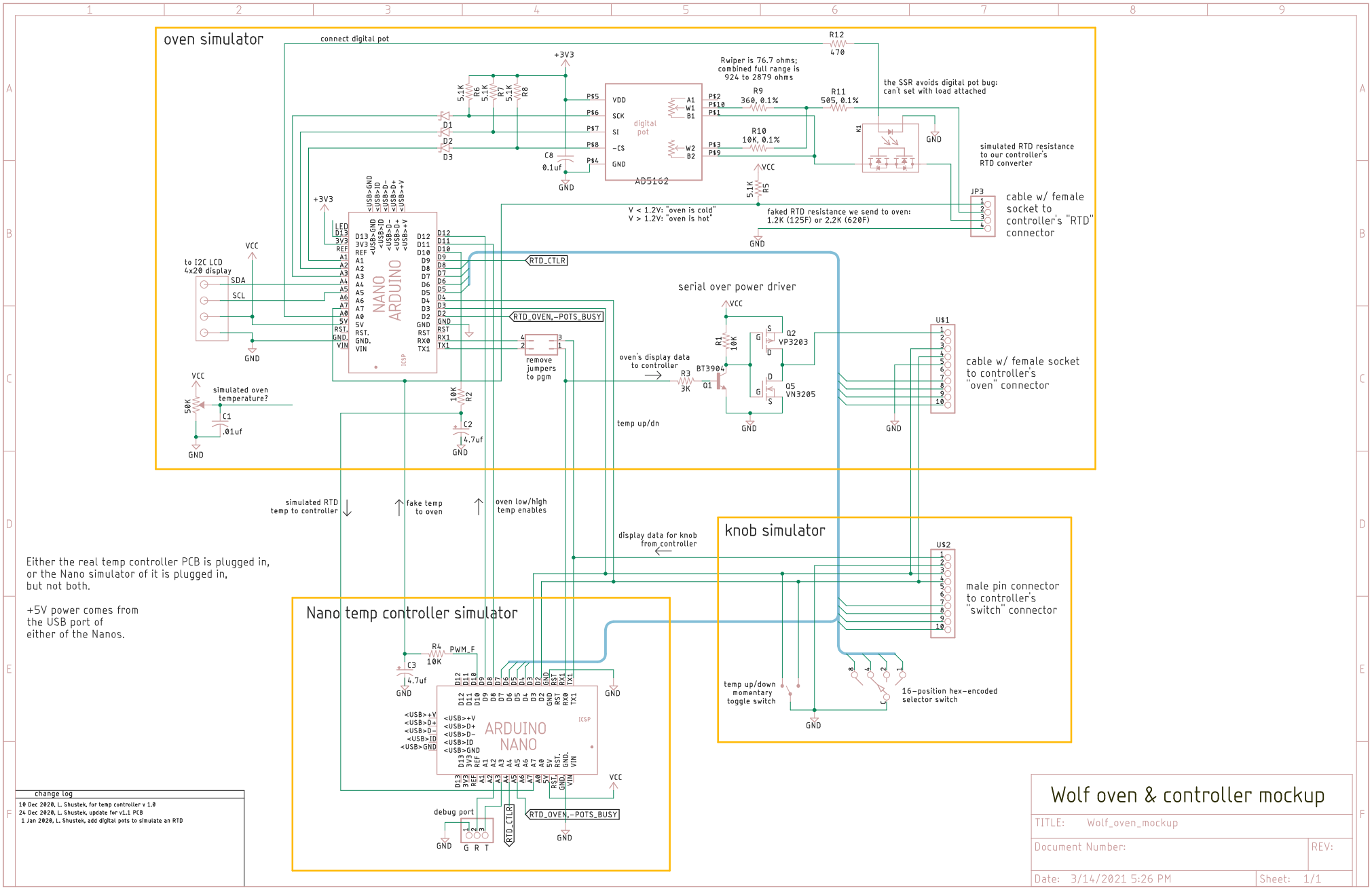
oven simulator
connect digital pot
R12
470
+3V3
Rwiper is 76.7 ohms;
combined full range is
924 to 2879 ohms
the SSR avoids digital pot bug:
can't set with load attached
R9
360, 0.1%
R11
505, 0.1%
R10
10K, 0.1%
digital pot
AD5162
VDD
SCK
SI
-CS
GND
A1
W1
B1
W2
B2
P$5
P$6
P$7
P$8
P$4
P$2
P$10
P$1
P$3
P$9
5.1K R6
5.1K R7
5.1K R8
D1
D2
D3
C8
0.1uf
K1
simulated RTD resistance
to our controller's
RTD converter
JP3
cable w/ female
socket to
controller's "RTD"
connector
5.1K R5
VCC
V < 1.2V: "oven is cold"
V > 1.2V: "oven is hot"
faked RTD resistance we send to oven:
1.2K (125F) or 2.2K (620F)
NANO ARDUINO
ICSP
RTD_CTLR
RTD_OVEN,-POTS_BUSY
to I2C LCD
4x20 display
SDA
SCL
remove
jumpers
to pgm
serial over power driver
Q2
VP3203
Q5
VN3205
R1
10K
R3
3K
BT3904
Q1
oven's display data
to controller
temp up/dn
U$1
cable w/ female socket
to controller's
"oven" connector
simulated oven
temperature?
50K
C1
.01uf
10K R2
C2
4.7uf
simulated RTD
temp to controller
fake temp
to oven
oven low/high
temp enables
display data for knob
from controller
knob simulator
U$2
male pin connector
to controller's
"switch" connector
temp up/down
momentary
toggle switch
16-position hex-encoded
selector switch
Nano temp controller simulator
R4
10K
PWM_F
C3
4.7uf
ARDUINO
NANO
debug port
G R T
Either the real temp controller PCB is plugged in,
or the Nano simulator of it is plugged in,
but not both.
+5V power comes from
the USB port of
either of the Nanos.
change log
10 Dec 2020, L. Shustek, for temp controller v 1.0
24 Dec 2020, L. Shustek, update for v1.1 PCB
1 Jan 2020, L. Shustek, add digital pots to simulate an RTD
Wolf oven & controller mockup
TITLE: Wolf_oven_mockup
Document Number:
REV:
Date: 3/14/2021 5:26 PM
Sheet: 1/1