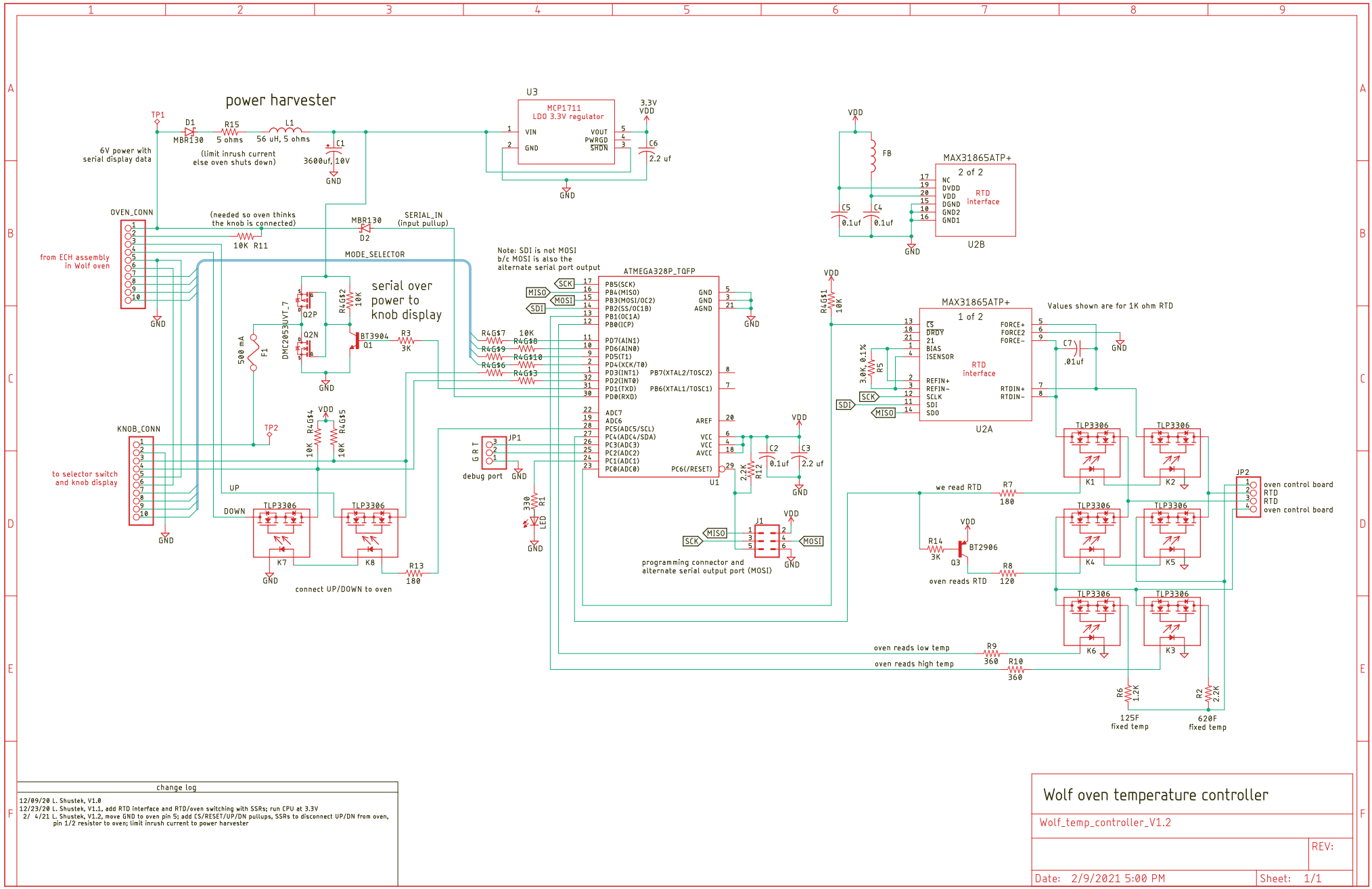

change log
12/09/20 L. Shustek, V1.0
12/23/20 L. Shustek, V1.1, add RTD interface and RTD/oven switching with SSRs; run CPU at 3.3V
2/ 4/21 L. Shustek, V1.2, move GND to oven pin 5; add CS/RESET/UP/DN pullups, SSRs to disconnect UP/DN from oven, pin 1/2 resistor to oven; limit inrush current to power harvester

Wolf oven temperature controller

Wolf_temp_controller_V1.2

REV:

Date: 2/9/2021 5:00 PM

Sheet: 1/1