BRICK
EDUCATION

BULLDOZER

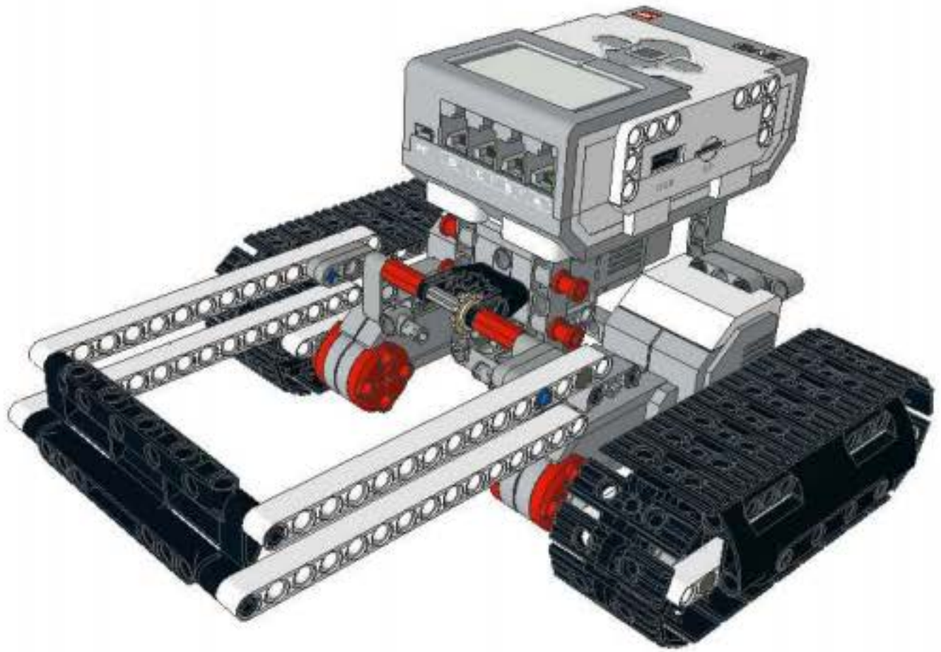

SUB MODEL

1

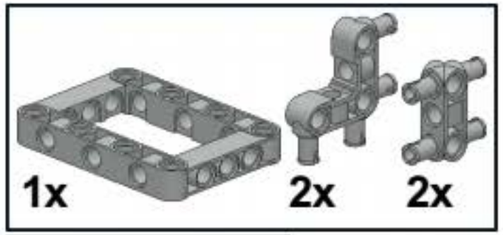

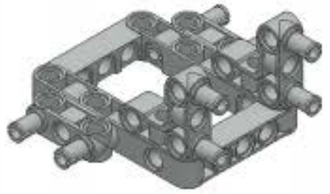

2

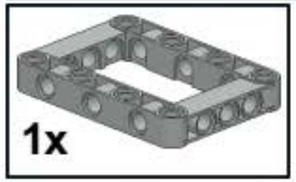

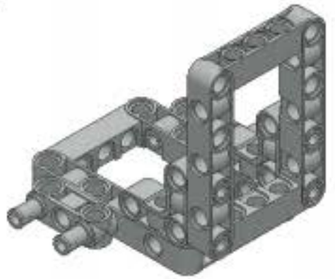

3

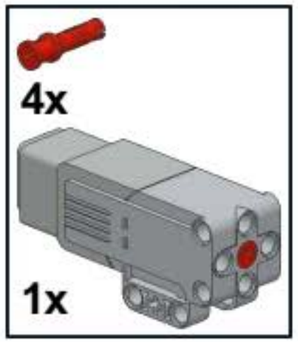

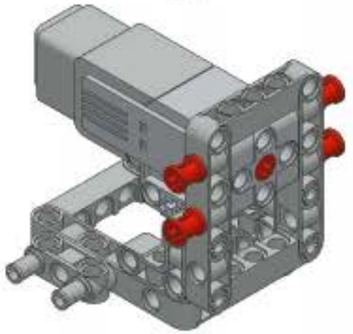

4

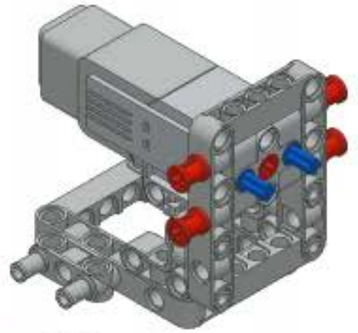

5

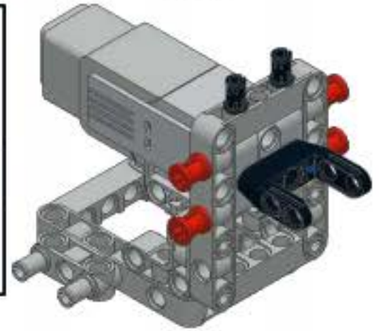

6

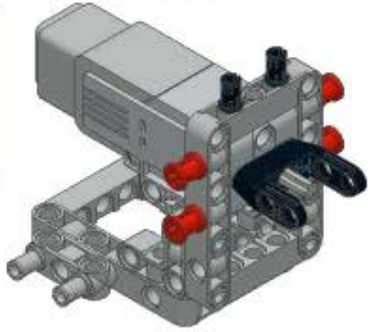

7

1x

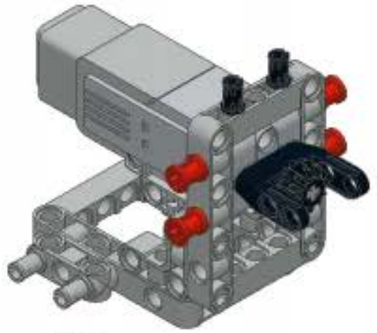

8

1x

5

1x

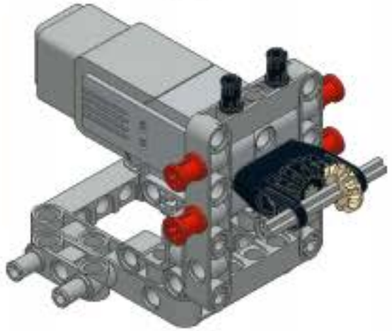

9

2x

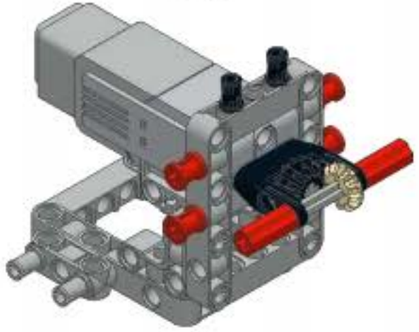

1

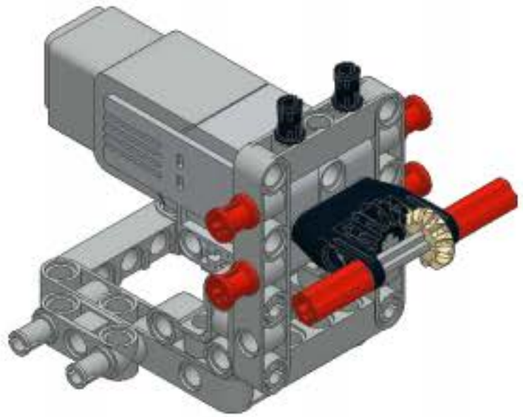

SUB MODEL

SUB MODEL

1

15

1x

2x

2

8

1x

3

1x

1x

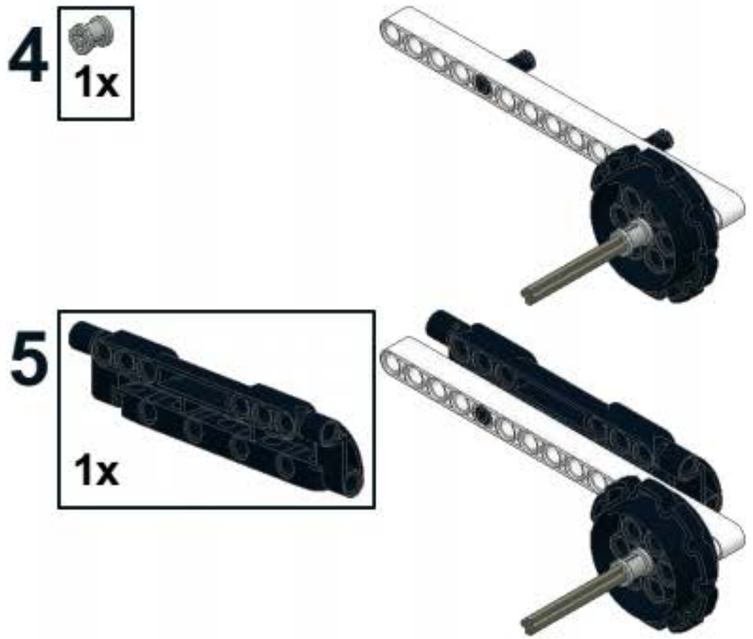
4
1x
5
1x

6

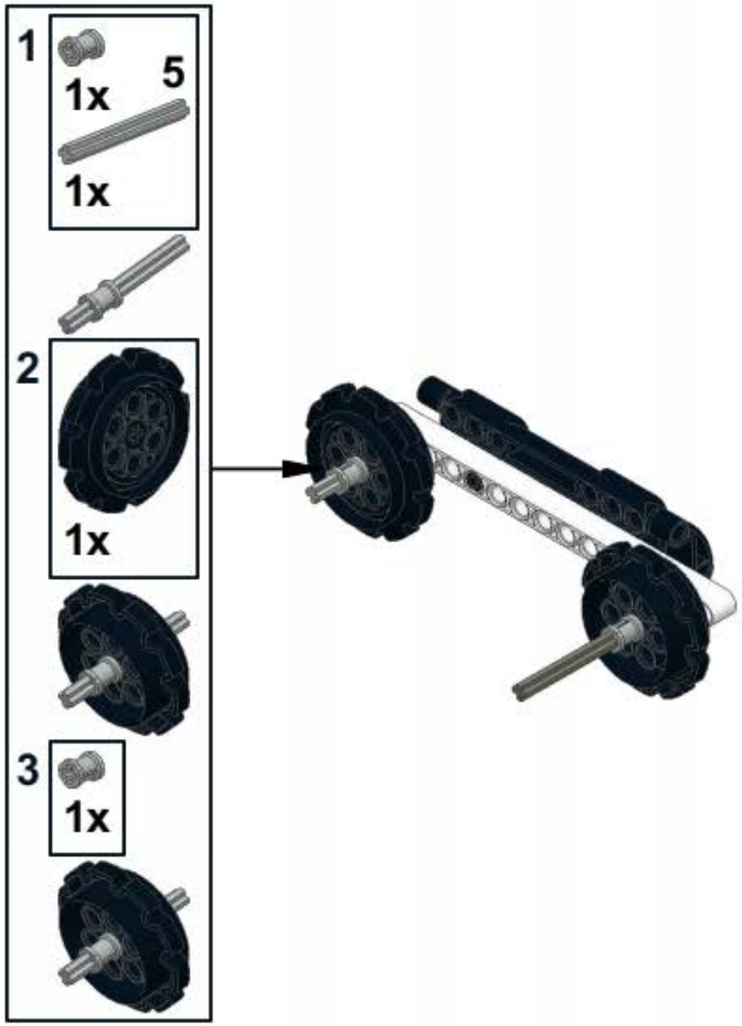

7

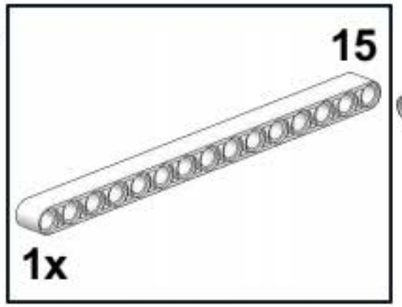

8

9

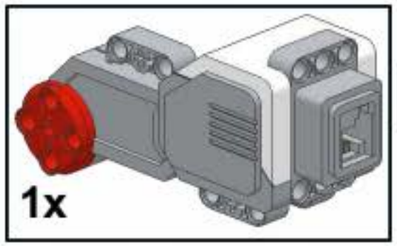

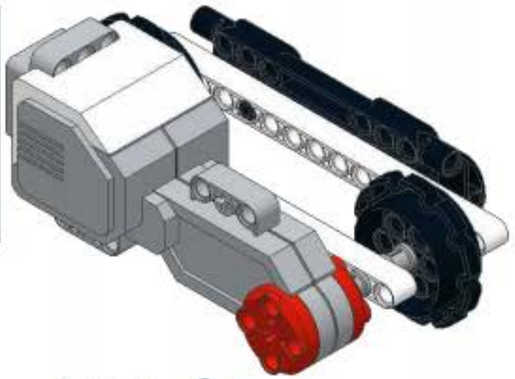

10

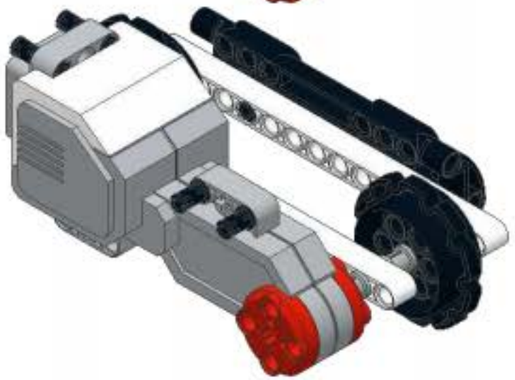

11

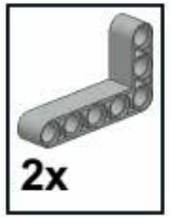

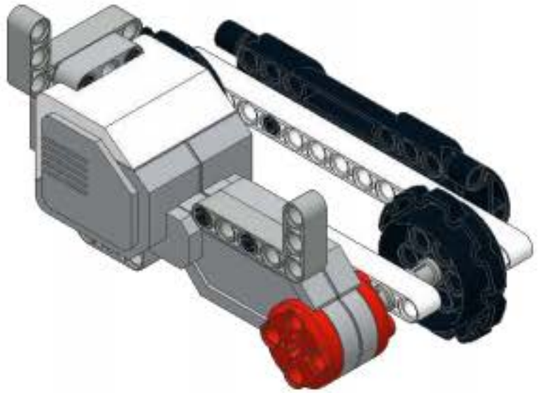

12

1x

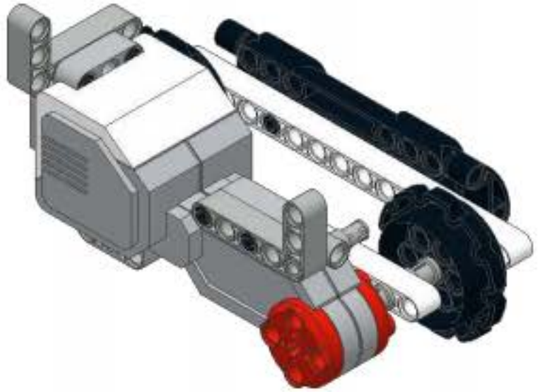

2

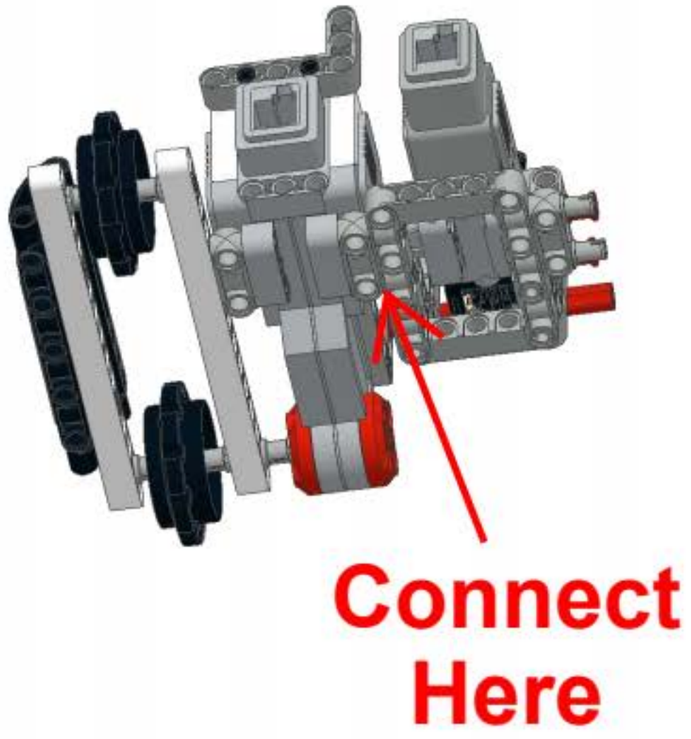

SUB MODEL

SUB MODEL

1

15

1x

2x

2

8

1x

3

1x

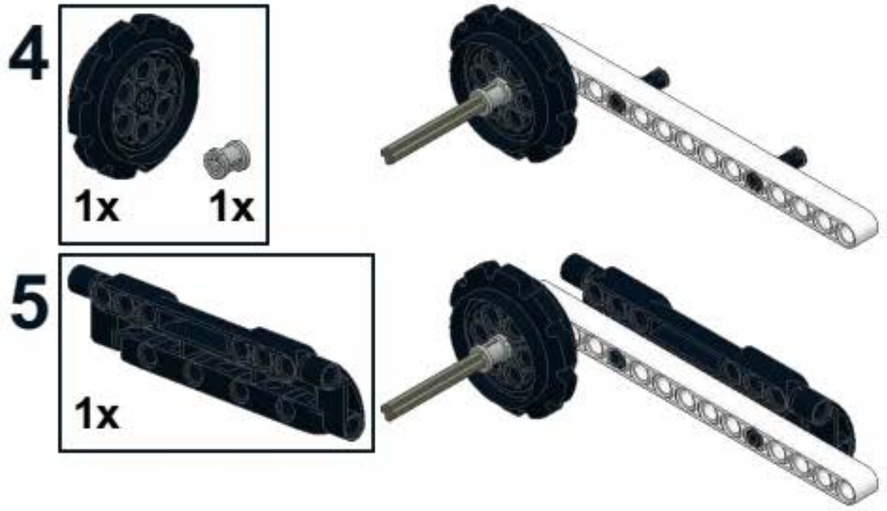
4
1x
1x
5
1x

6

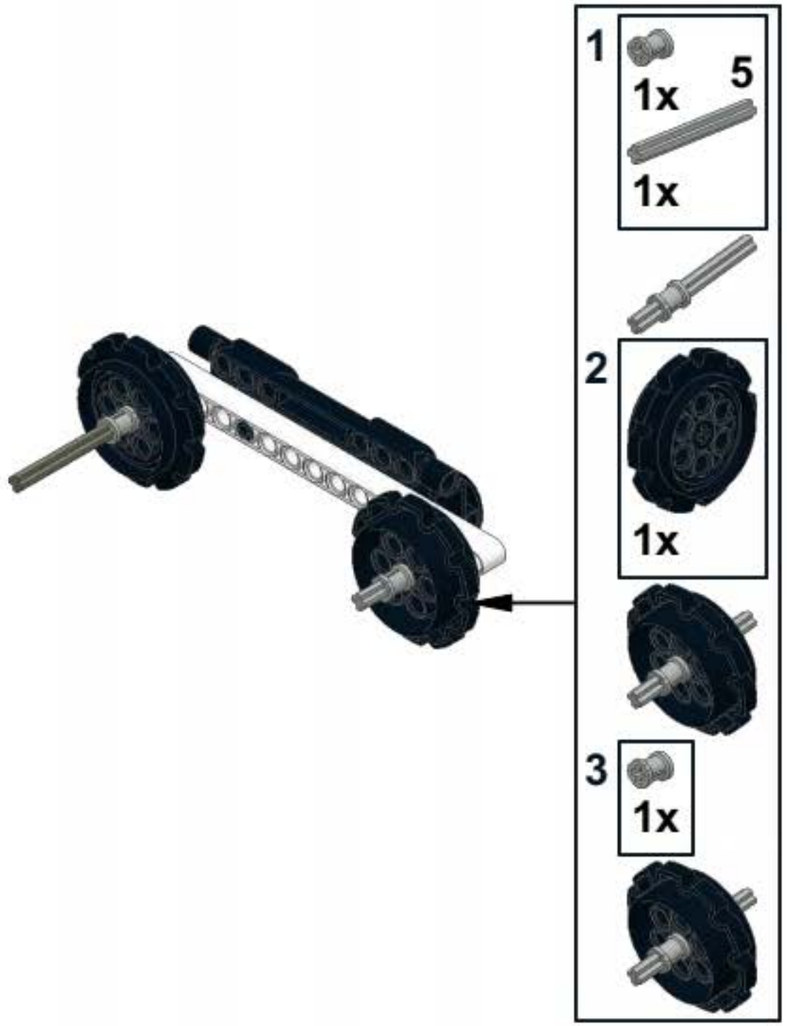

7

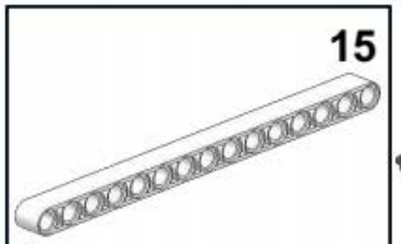

8

9

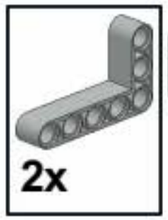

10

3

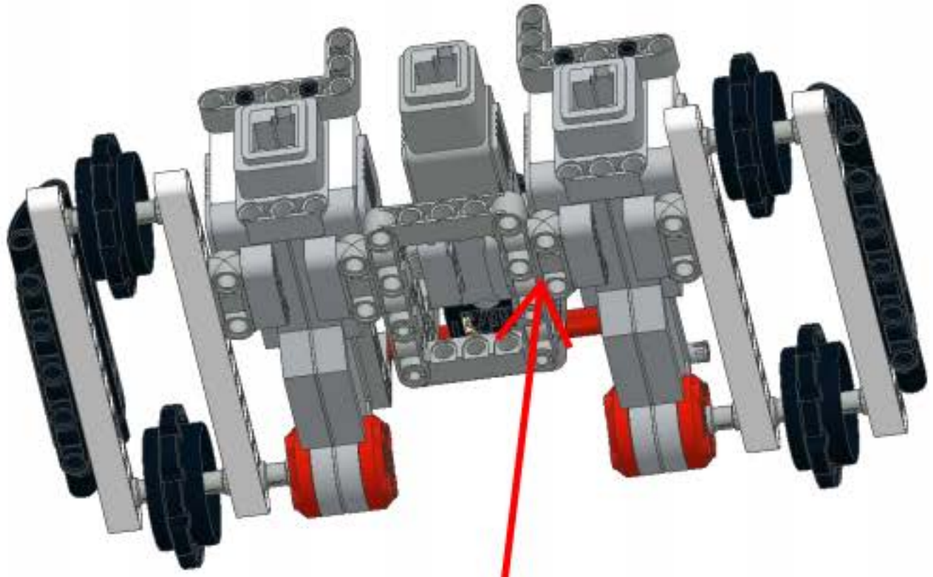

Connect Here

4

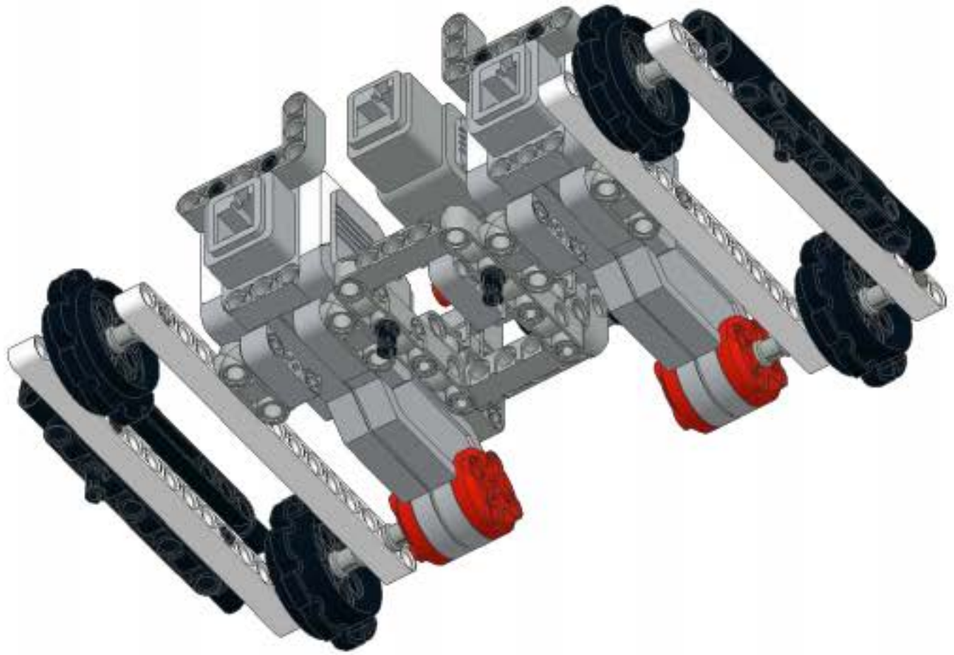

5

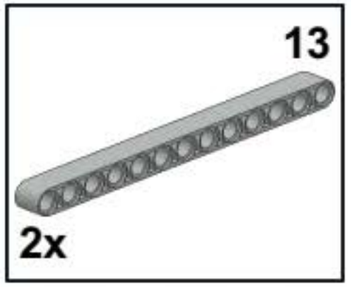

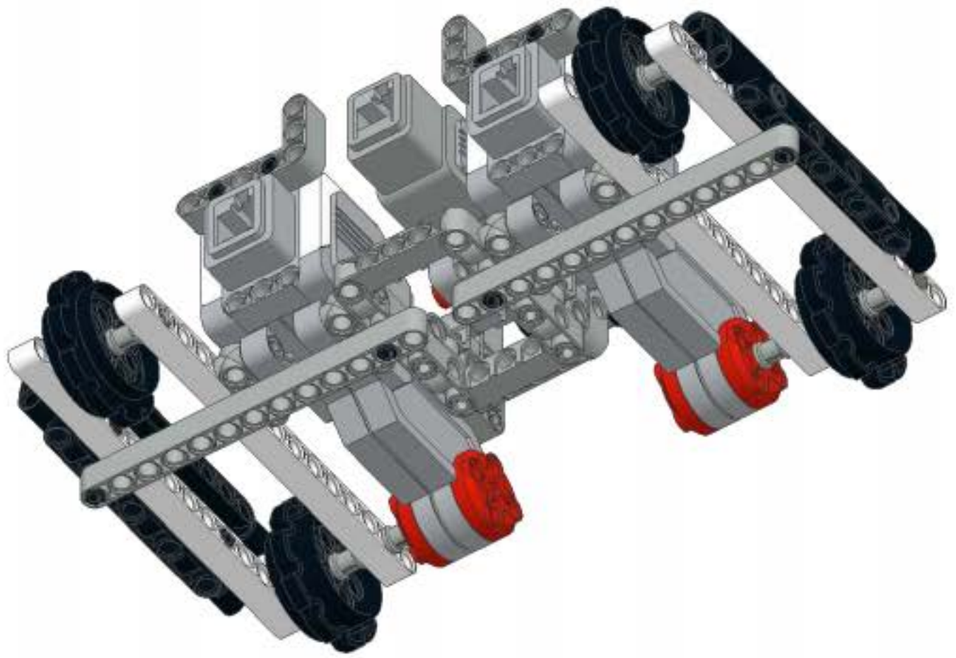

x2

6

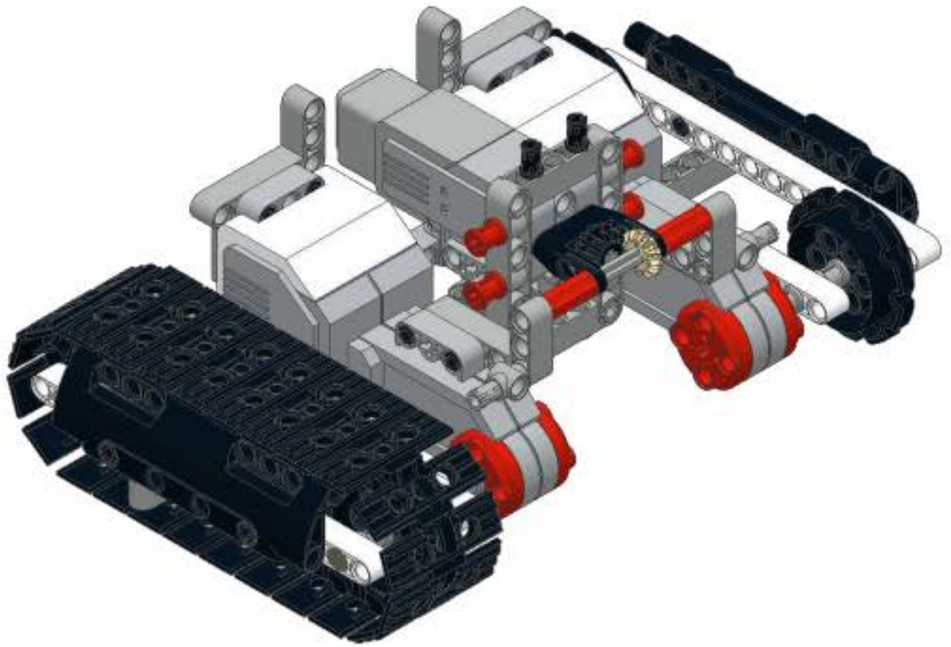

7

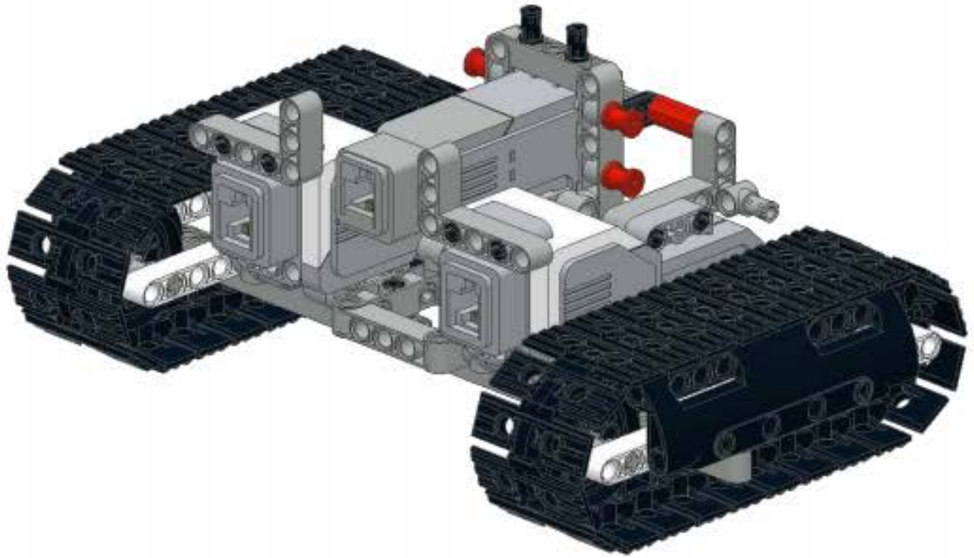

SUB MODEL

1

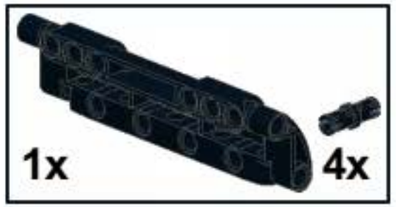

2

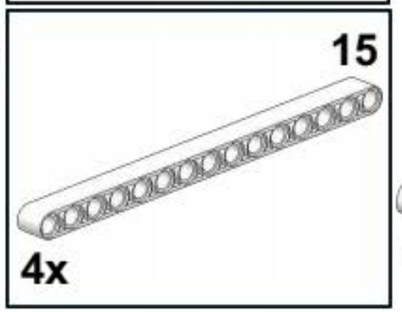

3

2x

4

4x

5

4

2x

8

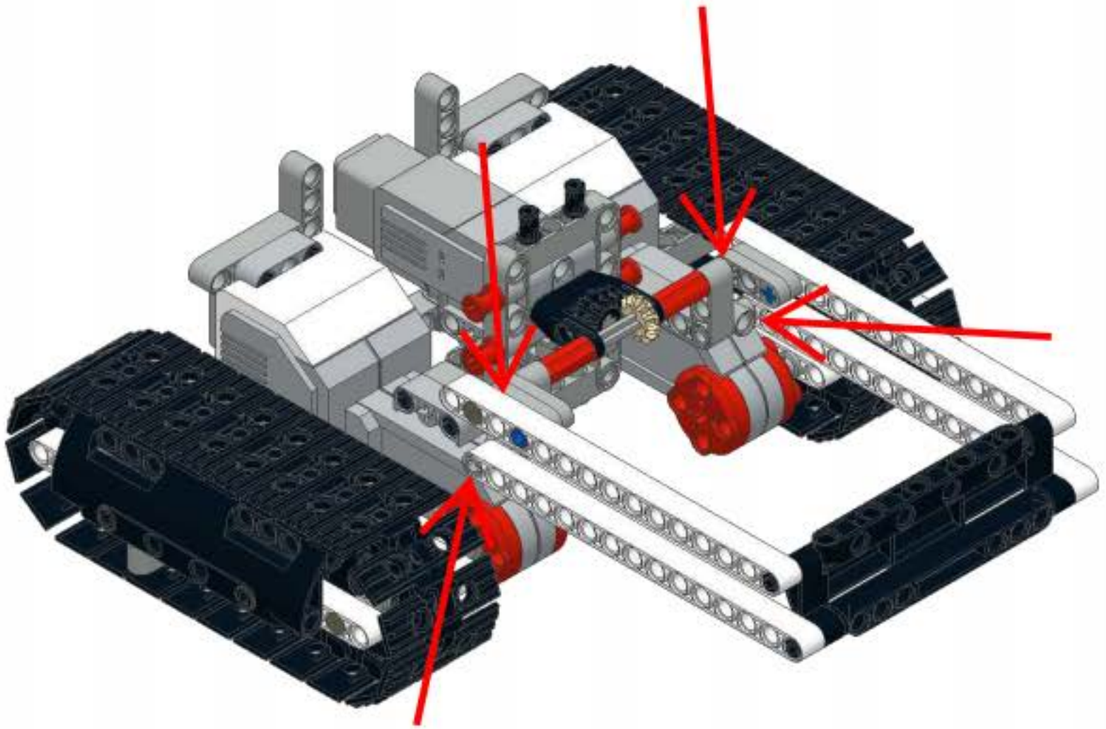

9

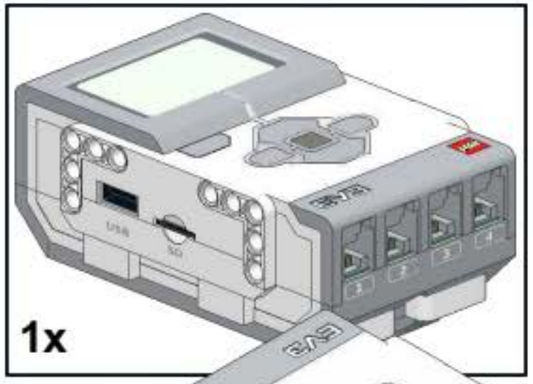

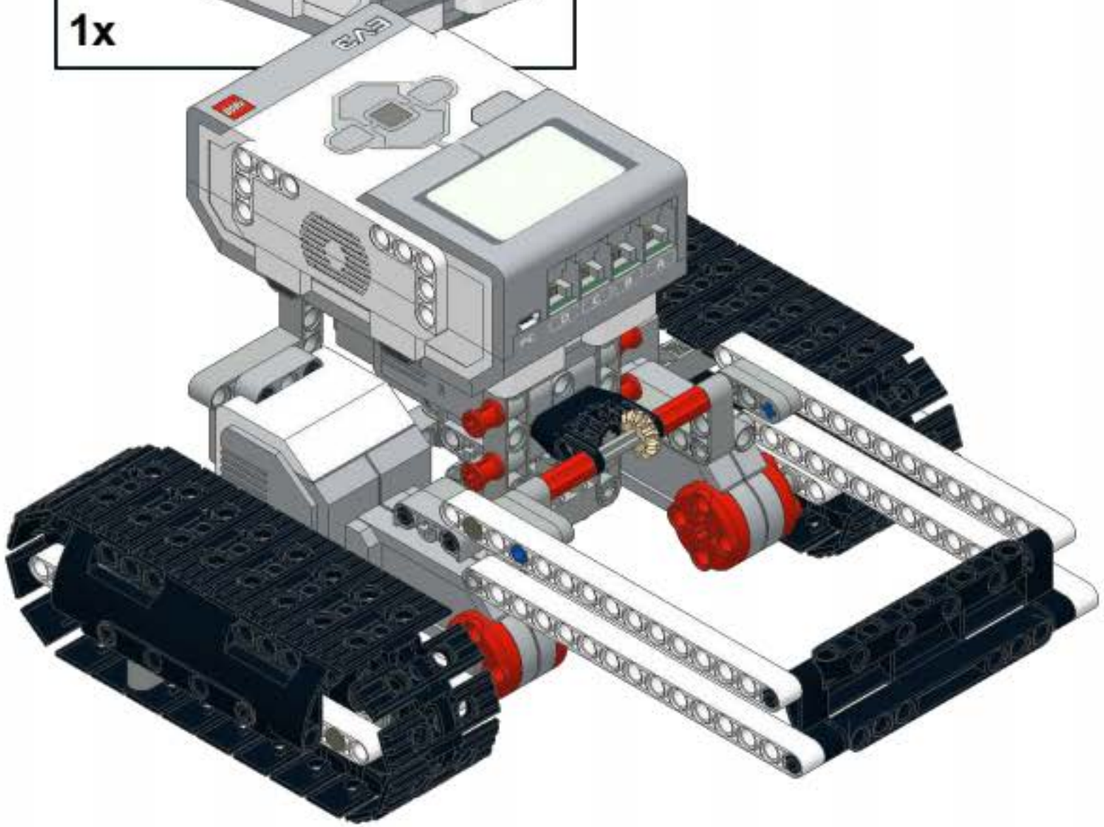

The Program

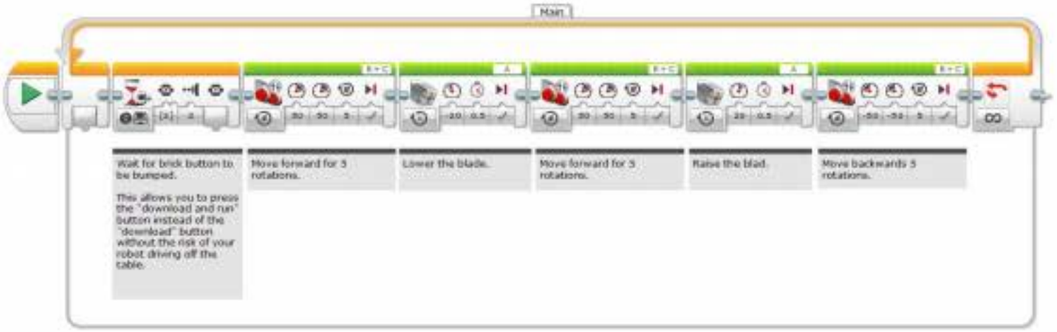

Remember that if the power for two motors is different this will make the robot turn. Can you make the bulldozer clean up some lego in the pattern below?

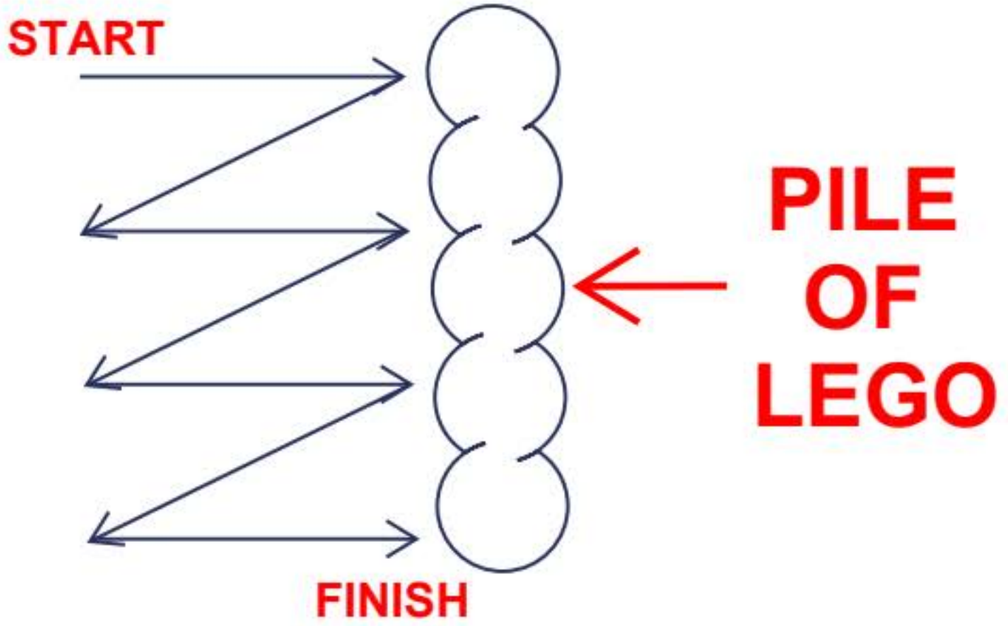

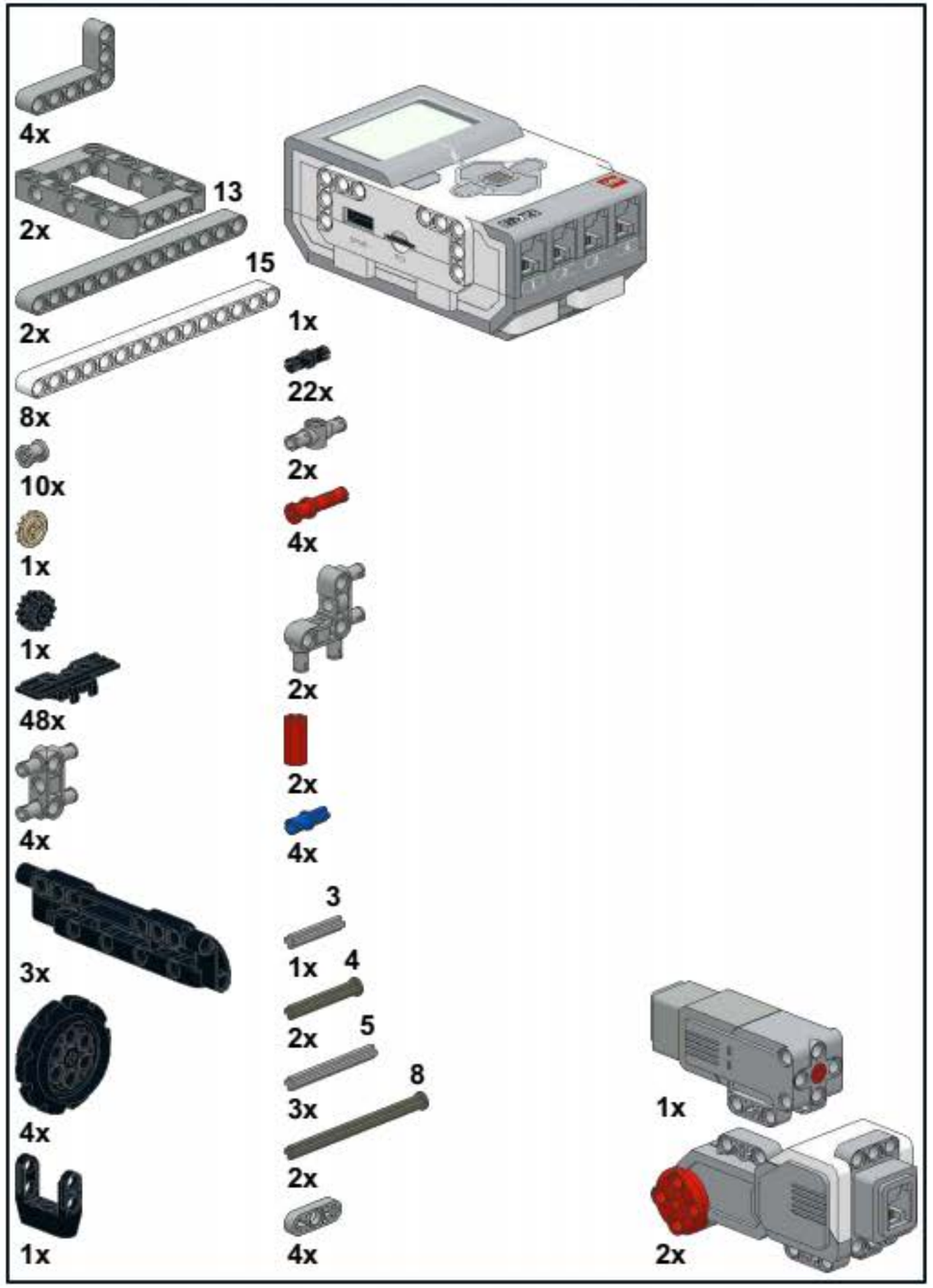
4x
2x
13
2x
15
8x
10x
1x
1x
48x
4x
3x
4x
1x
1x
22x
2x
4x
2x
2x
4x
3
1x
4
2x
5
3x
8
2x
4x
1x
2x