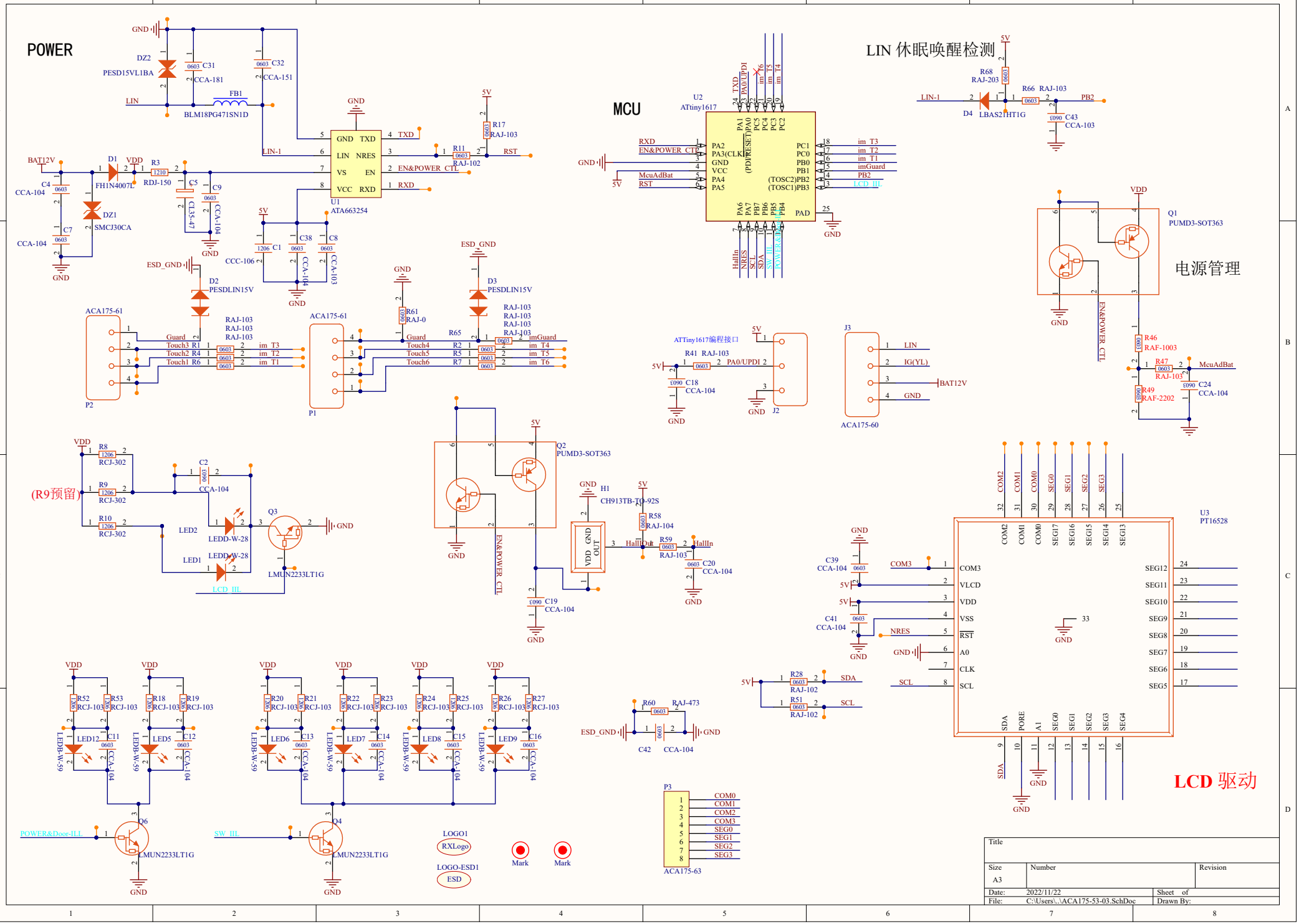
POWER
MCU
LIN 休眠唤醒检测
电源管理
LCD 驱动
(R9预留)
U1 ATA663254
U2 ATtiny1617
U3 PT16528
P1 ACA175-61
P2 ACA175-61
P3 ACA175-63
J2 ATTiny1617编程接口
J3 ACA175-60
Q1 PUMD3-SOT363
Q2 PUMD3-SOT363
Q3 LMUN2233LT1G
Q4 LMUN2233LT1G
Q6 LMUN2233LT1G
H1 CH913TB-TO-92S
D1 FH1N4007L
D2 PESDLIN15V
D3 PESDLIN15V
D4 LBAS21HT1G
DZ1 SMCJ30CA
DZ2 PESD15VL1BA
FB1 BLM18PG471SN1D
LOGO1 RXLogo
LOGO-ESD1 ESD
Mark
Mark
Title
Size A3
Number
Revision
Date: 2022/11/22
Sheet of
File: C:\Users\..\ACA175-53-03.SchDoc
Drawn By: