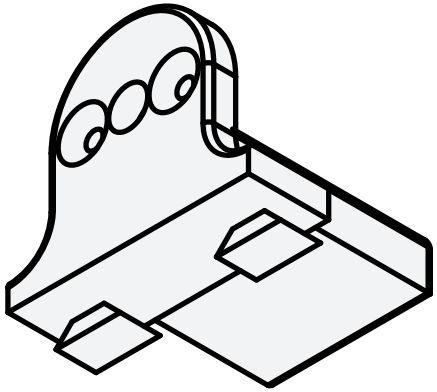

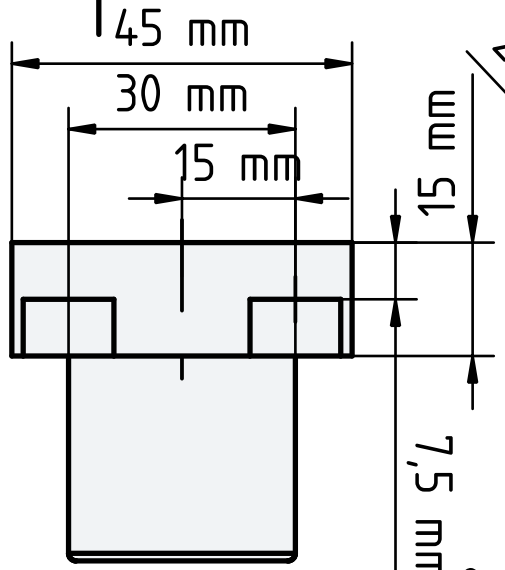

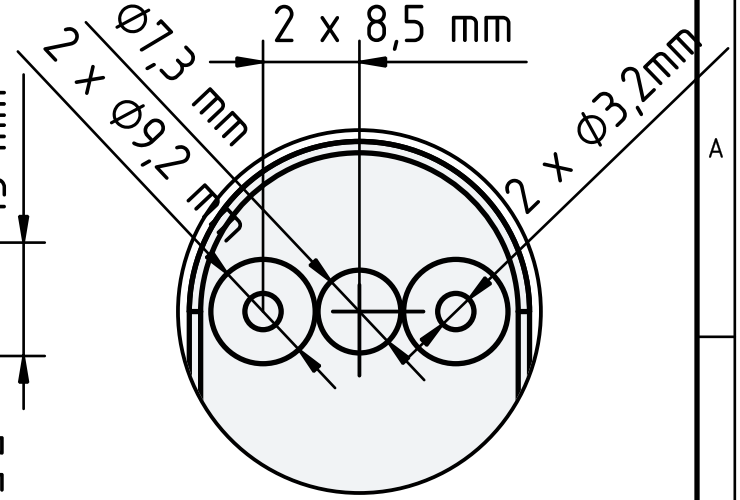

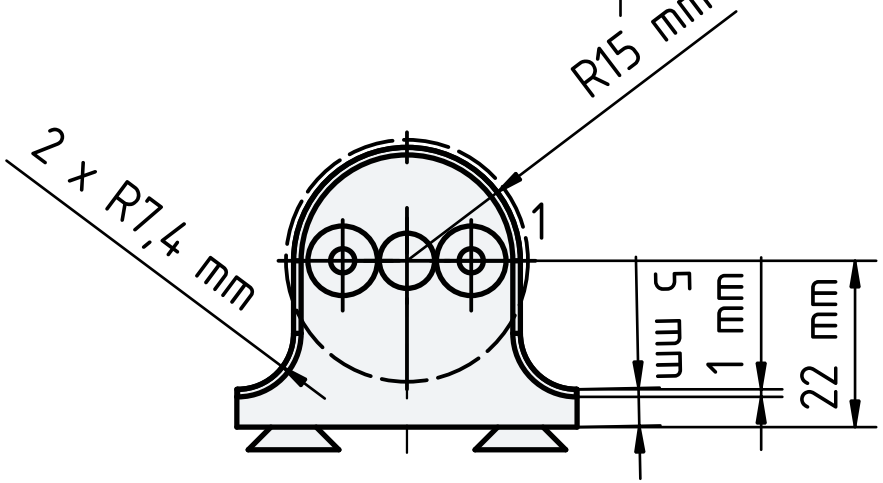

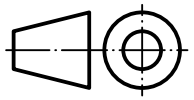

Part Material:
Plastic

General tolerances:
ISO 2768-m

Scale:
1 : 1

Title: Motor Attachment	Created by: Leonard Bach		Owner:	
Document type: Component Drawing	Approved by: Moritz Holzbauer			
Drawing number: DN	Language: EN	Issue date: 26.03.26	Revision: AAA	Sheet: 2 / 2

A4