ID	Qty	Name	Description
1	4	Connector	The beam connectors used for the bottom part of the BottomFrame
2	4	UpperConnector	The beam connectors used for the top part of the BottomFrame
3	4	BeamHorizontal	The beams for the long horizontal side of the BottomFrame
4	4	BeamHorizontalShort	The beams for the short horizontal side of the BottomFrame
5	4	BeamVertical	The vertical beams of the BottomFrame
6	4	Column	The vertical beams of the TopFrame
7	1	Topper	The top cover of the TopFrame
8	2	Attachment	The attachment for the motors of the BottomFrame
9	1	PCBHolder	The part which holds the PCB with the electrical components

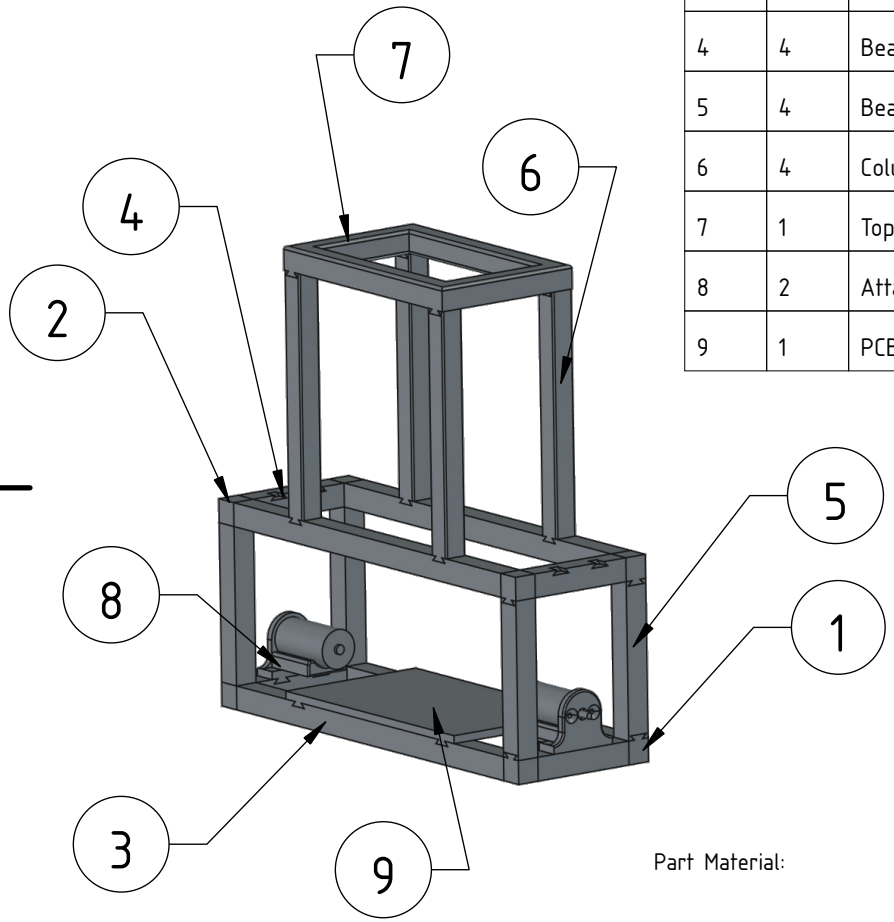

All sliders are based on the second page. If there is no position set it is symmetrical.

Part Material:

General tolerances: ISO 2768-m

Scale: 1 : 1

Title: Overview	Created by: Leonard Bach		Owner: Leonard Bach	
Document type: Component Drawing	Approved by:			
Drawing number: 00	Language: EN	Issue date: 30.03.26	Revision: AAA	Sheet: 1 / 11

A4

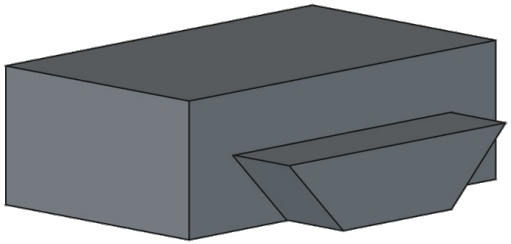

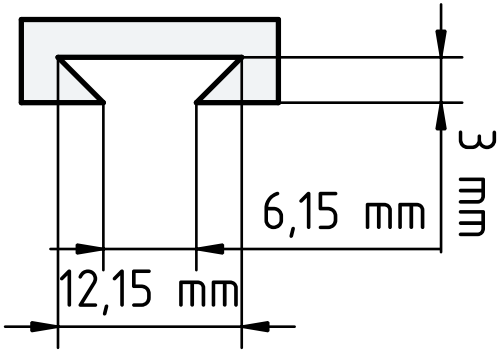

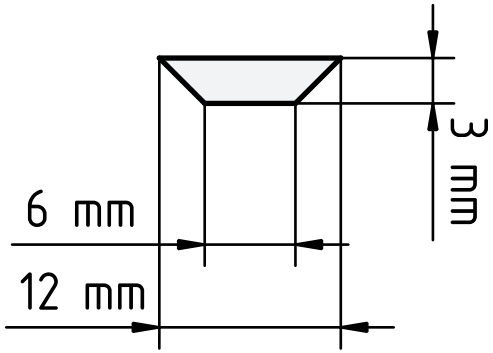

The offset is set in VarSet.Offset

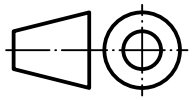

Part Material: Plastic (PLA)	General tolerances: ISO 2768-m	Scale: 2 : 1		
Title: Sliders	Created by: Leonard Bach		Owner: Leonard Bach	
Document type: Component Drawing	Approved by:			
Drawing number: --	Language: EN	Issue date: 30.03.26	Revision: AAA	Sheet: 2 / 11

A4

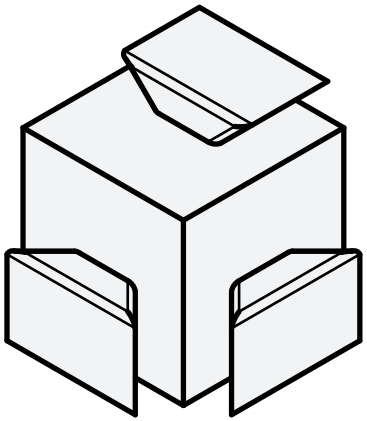

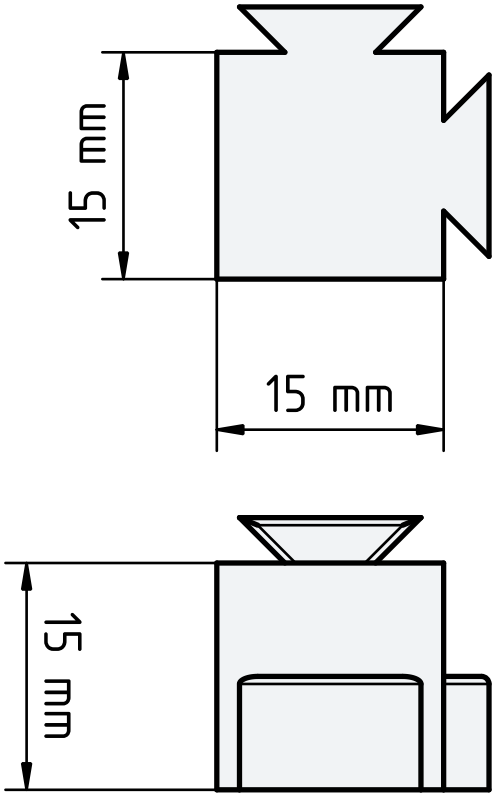

Part Material:
Plastic (PLA)

General tolerances:
ISO 2768-m

Scale:
2 : 1

Title: Connector	Created by: Leonard Bach		Owner: Leonard Bach	
Document type: Component Drawing	Approved by:			
Drawing number: 01	Language: EN	Issue date: 30.03.26	Revision: AAA	Sheet: 3 / 11

A4

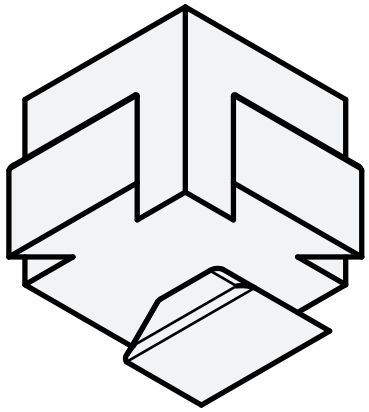

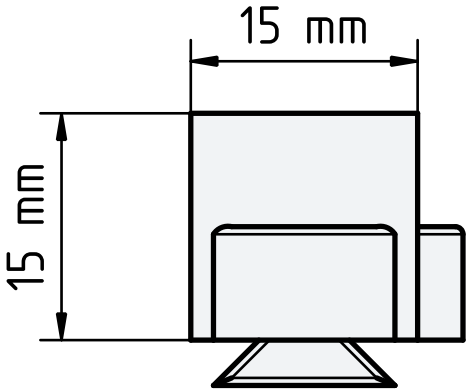

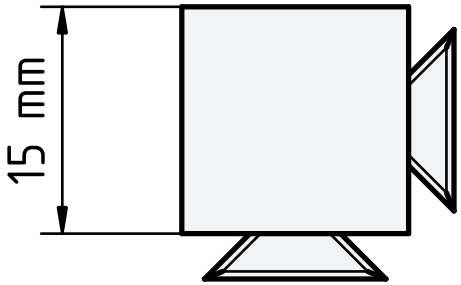

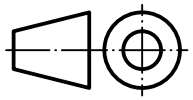

Part Material:
Plastic (PLA)

General tolerances:
ISO 2768-m

Scale:
2 : 1

Title: UpperConnector	Created by: Leonard Bach		Owner: Leonard Bach	
Document type: Component Drawing	Approved by:			
Drawing number: 02	Language: EN	Issue date: 30.03.26	Revision: AAA	Sheet: 4 / 11

A4

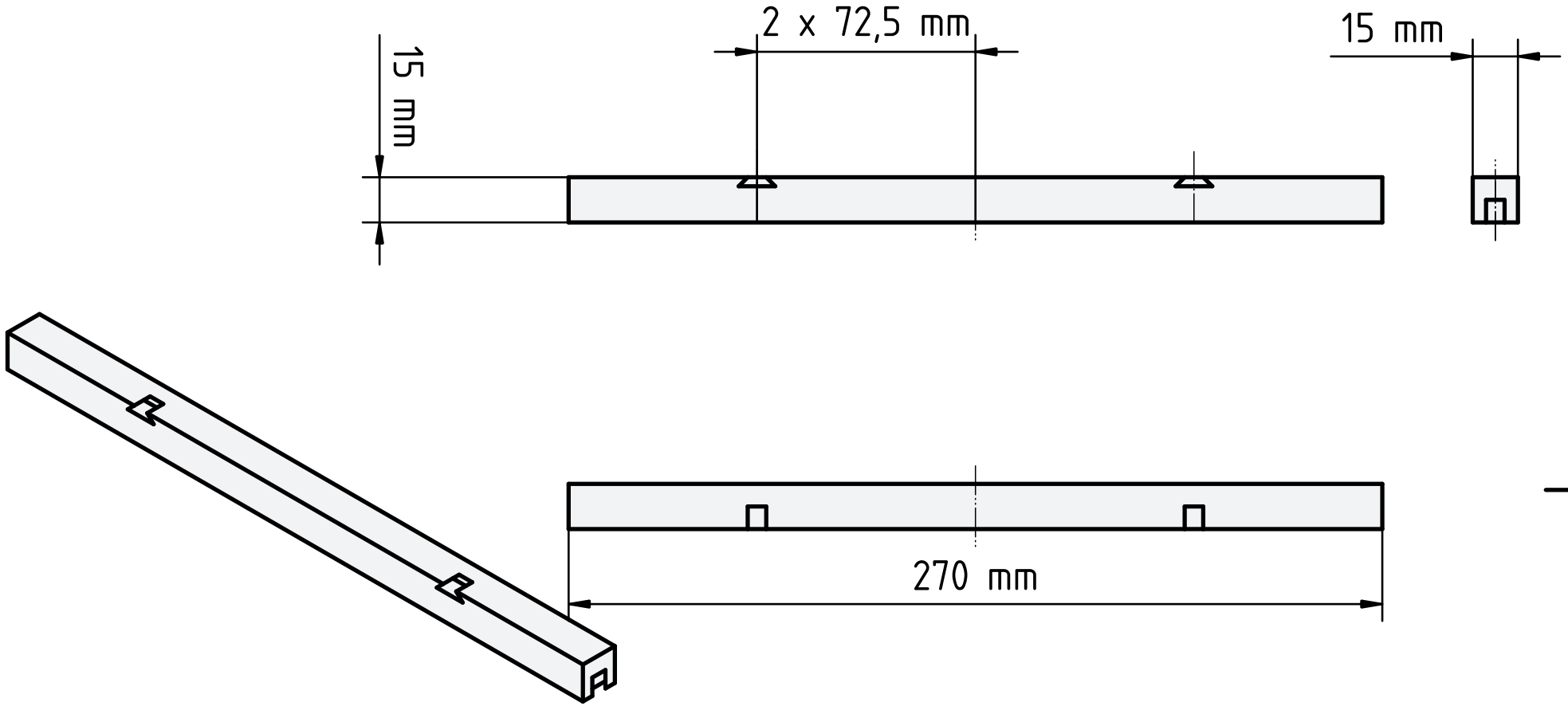

Part Material:
Plastic (PLA)

General tolerances:
ISO 2768-m

Scale:
1 : 2

Title: BeamHorizontal	Created by: Leonard Bach		Owner: Leonard Bach	
Document type: Component Drawing	Approved by:			
Drawing number: 03	Language: EN	Issue date: 30.03.26	Revision: AAA	Sheet: 5 / 11

A4

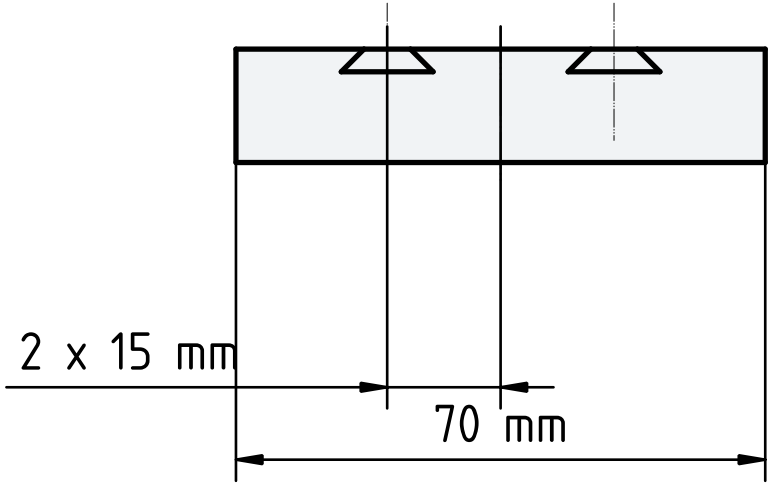

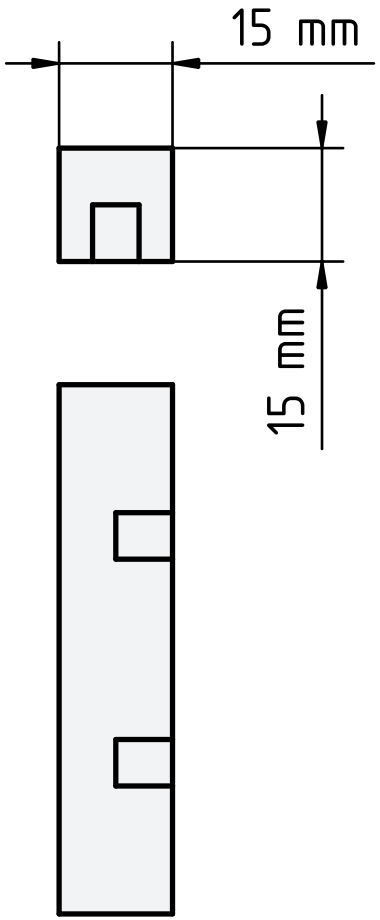

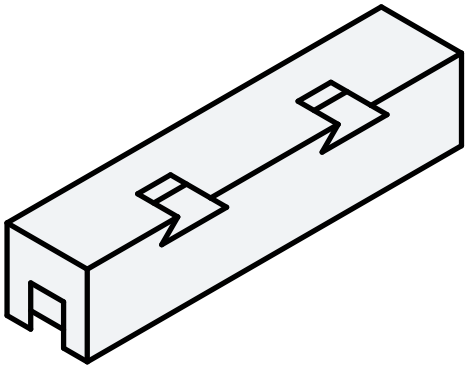

Part Material:
Plastic (PLA)

General tolerances:
ISO 2768-m

Scale:
1 : 1

Title: BeamHorizontalShort	Created by: Leonard Bach		Owner: Leonard Bach	
Document type: Component Drawing	Approved by:			
Drawing number: 04	Language: EN	Issue date: 30.03.26	Revision: AAA	Sheet: 6 / 11

A4

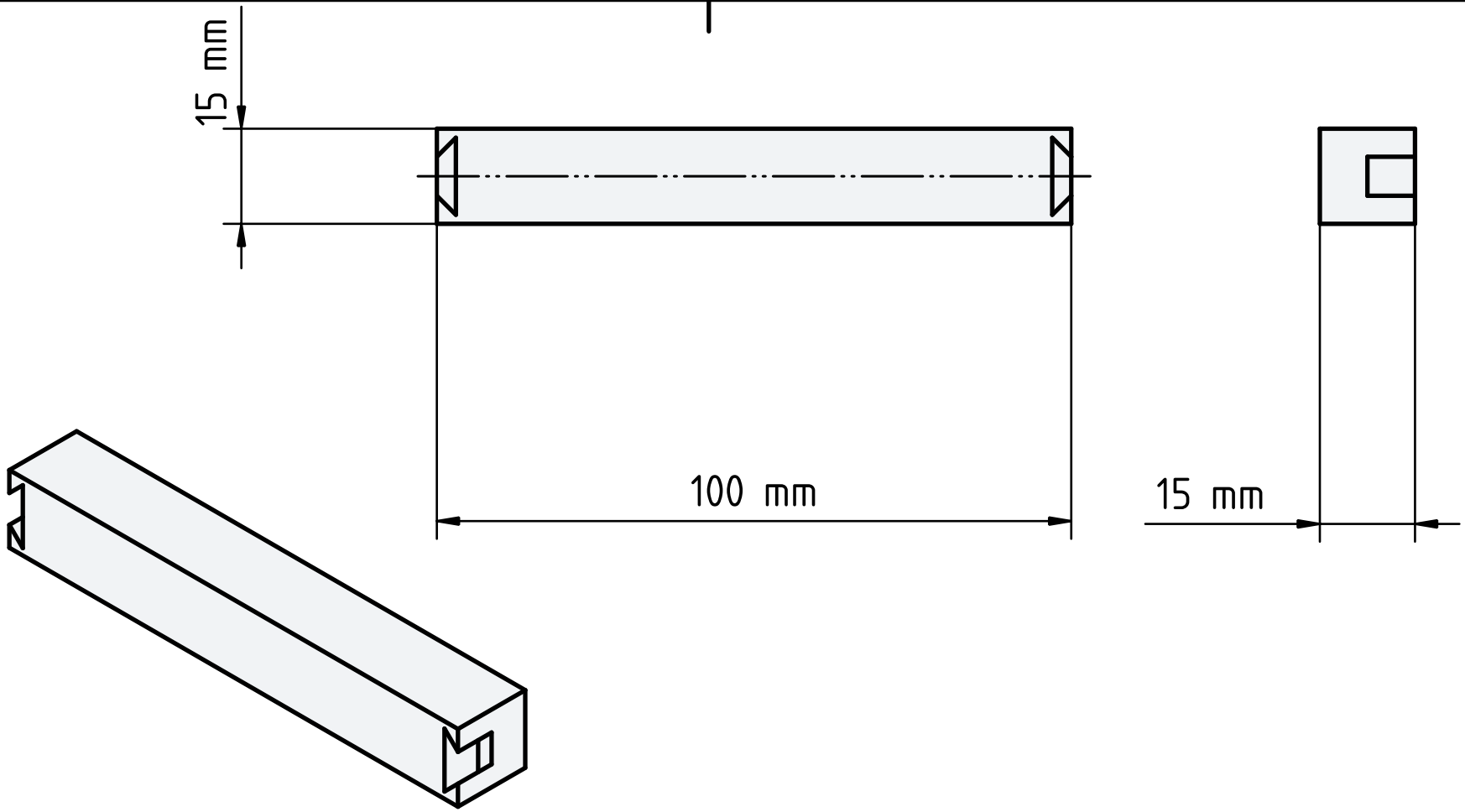

Part Material:
Plastic (PLA)

General tolerances:
ISO 2768-m

Scale:
1 : 1

Title: BeamVertical	Created by: Leonard Bach		Owner: Leonard Bach	
Document type: Component Drawing	Approved by:			
Drawing number: 05	Language: EN	Issue date: 30.03.26	Revision: AAA	Sheet: 7 / 11

A4

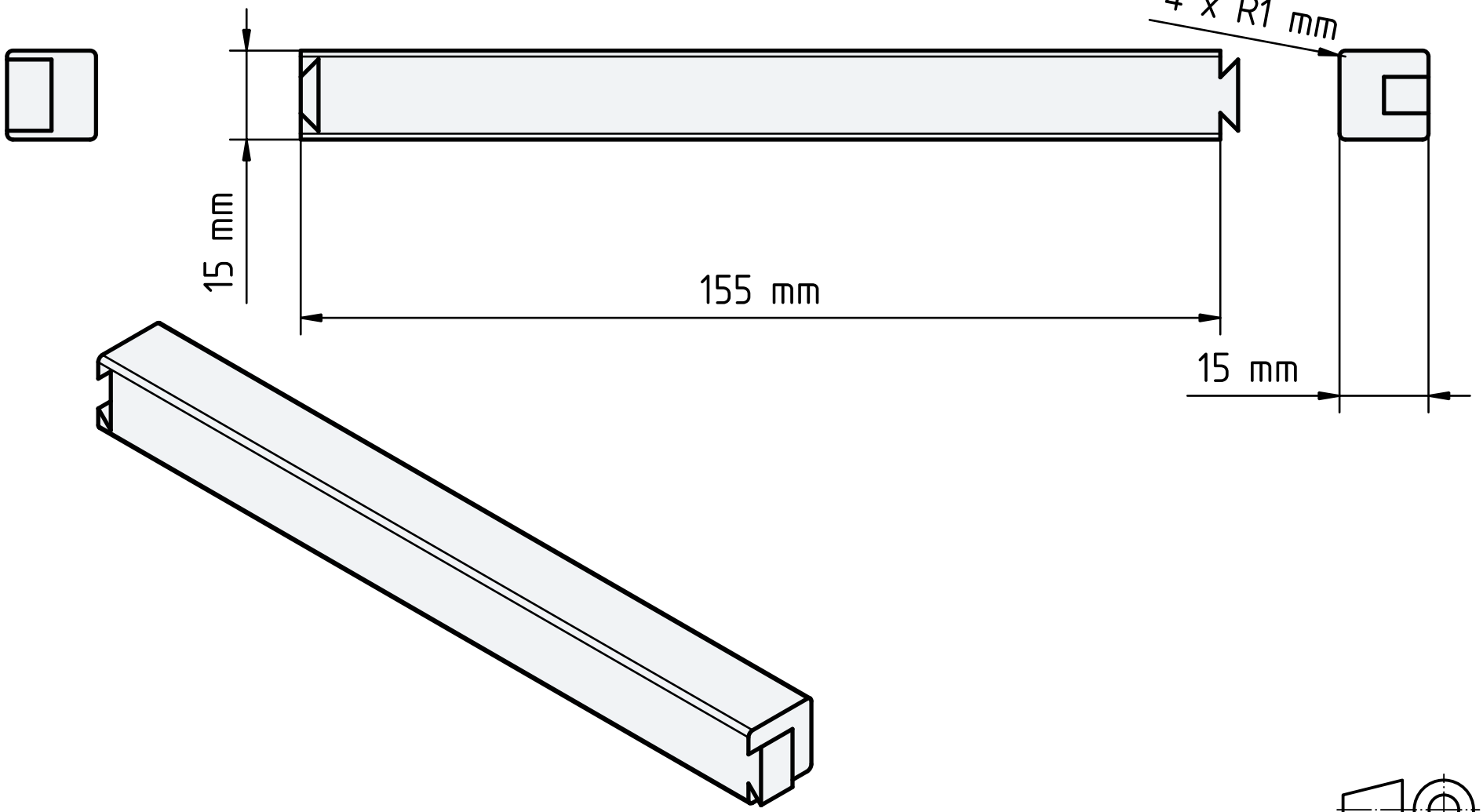

Part Material:
Plastic (PLA)

General tolerances:
ISO 2768-m

Scale:
1 : 1

Title: Column	Created by: Leonard Bach		Owner: Leonard Bach	
Document type: Component Drawing	Approved by:			
Drawing number: 06	Language: EN	Issue date: 30.03.26	Revision: AAA	Sheet: 8 / 11

A4

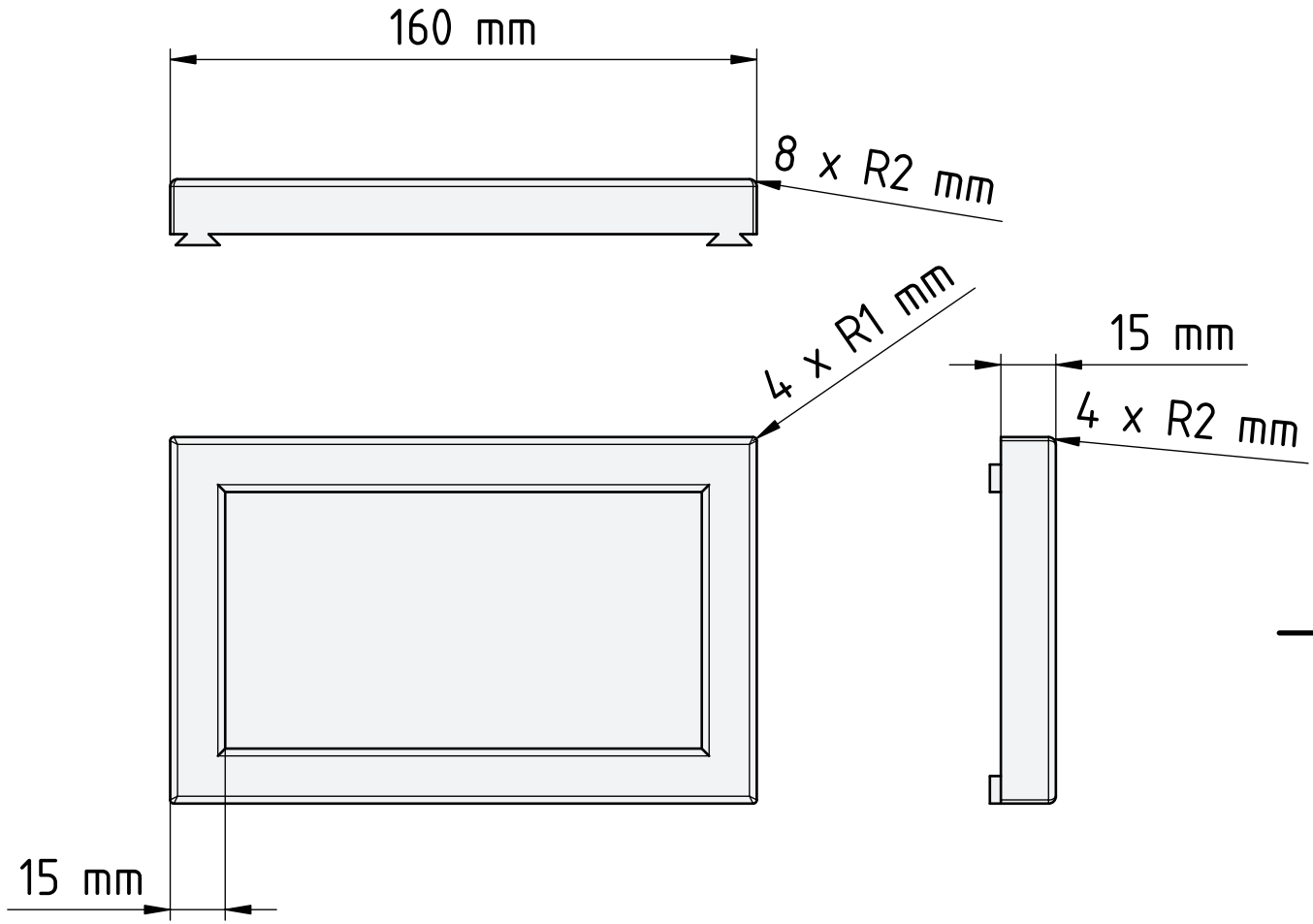

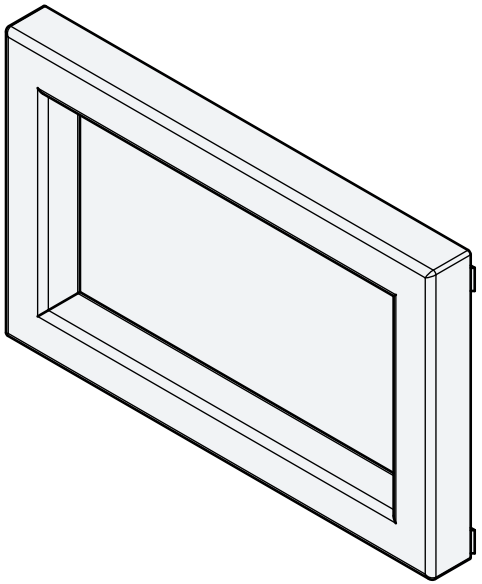

Part Material:
Plastic (PLA)

General tolerances:
ISO 2768-m

Scale:
1 : 1

Title: Topper	Created by: Leonard Bach		Owner: Leonard Bach	
Document type: Component Drawing	Approved by:			
Drawing number: 07	Language: EN	Issue date: 30.03.26	Revision: AAA	Sheet: 9 / 11

A4

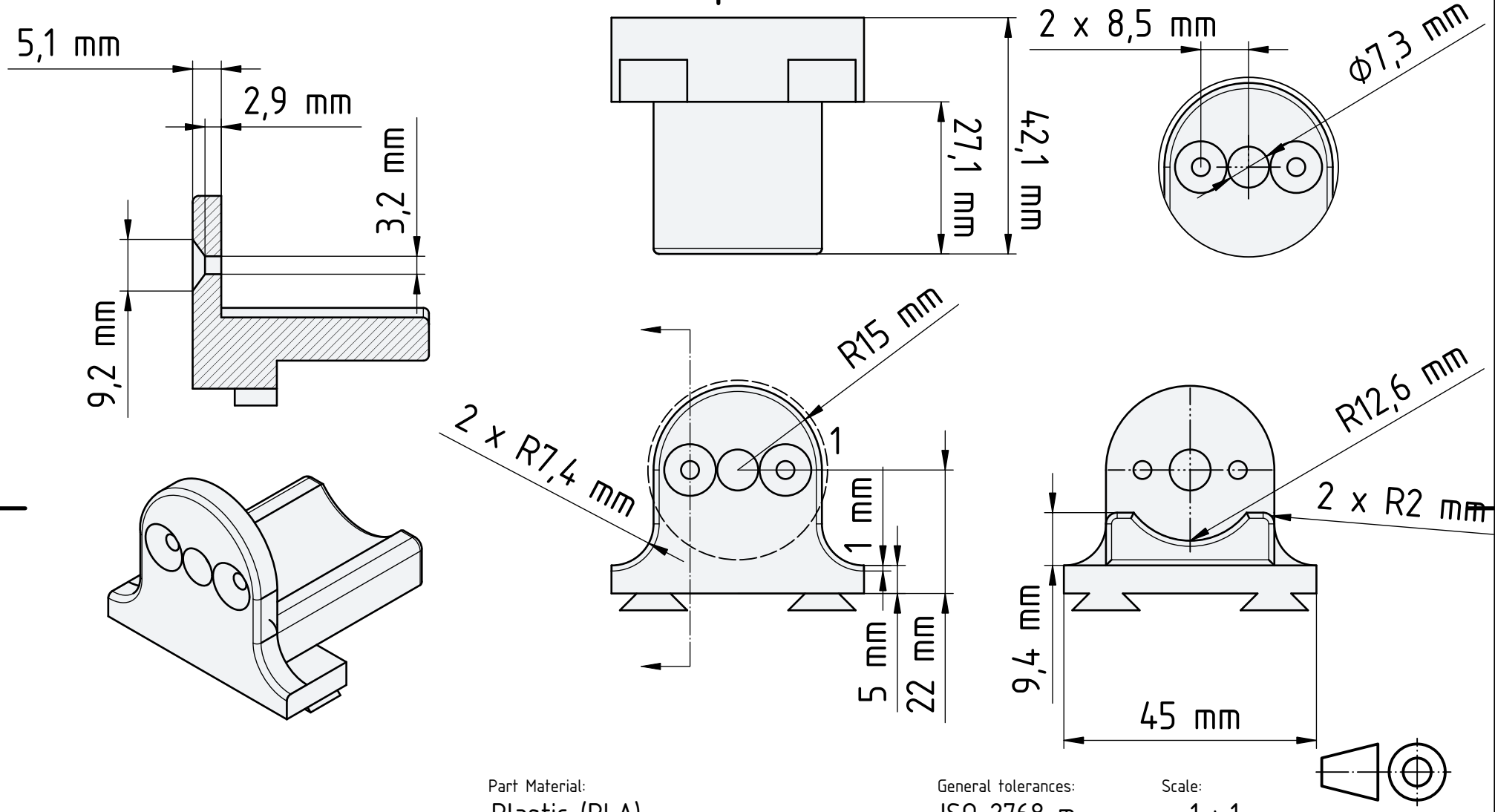

Part Material:
Plastic (PLA)

General tolerances:
ISO 2768-m

Scale:
1 : 1

Title: Attachment	Created by: Leonard Bach		Owner: Leonard Bach	
Document type: Component Drawing	Approved by:			
Drawing number: 08	Language: EN	Issue date: 30.03.26	Revision: AAA	Sheet: 10 / 11

A4

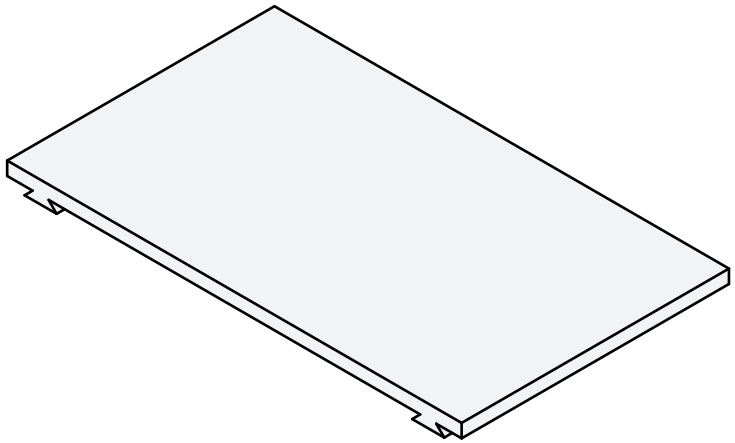

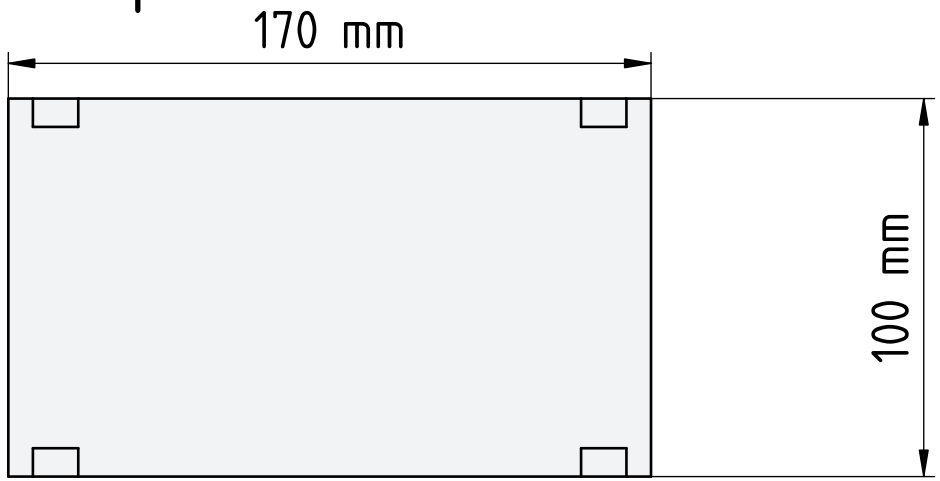

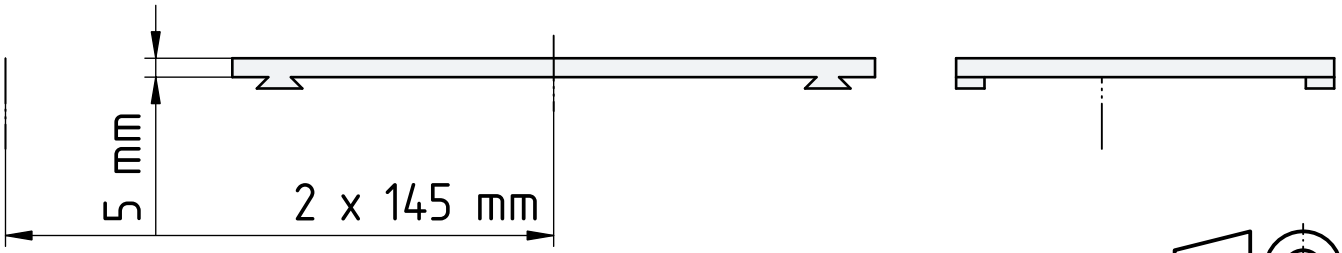

Part Material:
Plastic (PLA)

General tolerances:
ISO 2768-m

Scale:
1 : 1

Title: PCBHolder	Created by: Leonard Bach		Owner: Leonard Bach	
Document type: Component Drawing	Approved by:			
Drawing number: 09	Language: EN	Issue date: 30.03.26	Revision: AAA	Sheet: 11 / 11

A4