RDS3115MG Digital Robot Servo Motor Kits

APPLICATION

RDS3115MG digital robot servo motor kits is used for robots' applications and monitoring equipments,etc.

TECHNICAL SPECIFICATIONS AND DATA

MODEL	RDS3115MG	
SIZE AND WEIGHT	40x20x40.5mm / 60g	
GEAR MATERIAL	metal	
Motor	iron core	
CONNECTOR WIRE GAUGE	＃28 PVC	
CONNECTOR WIRE LENGTH	320 ± 5 mm	
REDUCTION RATIO	310 ： 1	
STORAGE TEMP.	-20℃～60℃	
OPERATION TEMP.	-10℃～50℃	
CONTROLABLE ROTATION SCOPE	180°	
ROTATION DIRECTION	anticlockwise	
OPERATION VOLTAGE	5V	7.4V
OPERATION SPEED WIHOUT LOAD	0.14 sec/60°	0.13sec/60°
RUNNING CURRENT WITHOUT LOAD	80mA	100mA
STALL TORQUE AT LOCKED	13.5 kg-cm	15kg-cm
STALL CURRENT AT LOCKED	1.3A	1.5A
STANDBY CURRENT	4mA	5mA
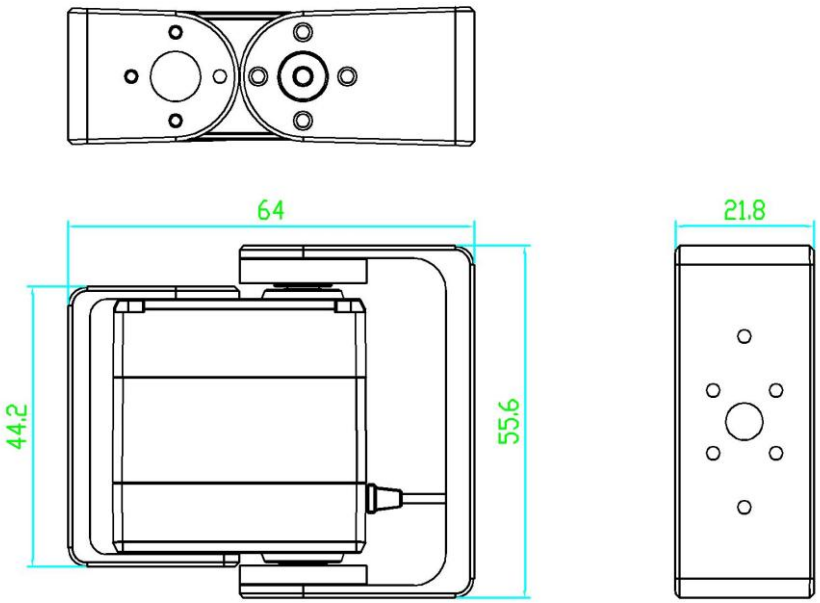
DIMENTIONS (mm)