You can type in any of the content and the table would actively filter to show only rows with corresponding values in any of them. Clearing the search would also bring back the default rows

These would work as tabs, so no new pageload would have to be done when switching the view

Logo | PG Blades | Machines | Users

Welcome Test user
Profile Logout

Factory Tampere Machine CM1

Version history | PG blade image | Laminating instructures

These would open a pop-up or an overlay window of the corresponding view.

Existing plans

search

No	EAN-codes	Bands	Stripes
101	5834932385432	4x250	6/23/6/23/6
102	Multiple	2x200	6/23/6/23/6
103	0987655321098	1x500 & 2x250	6/23/6/23/6/18/18/18
104	0553224233344	3x300	6/23/6/23/6
105	5834933385432	4x250	6/23/6/23/6
106	1234562890123	2x200	6/23/6/23/6
107	0987651321098	1x500 & 2x250	6/23/6/23/6
108	0553223233344	3x300	6/23/6/23/6
109	4834933385432	4x250	6/23/6/23/6
110	2234562890123	2x200	6/23/6/23/6
111	3987651321098	1x500 & 2x250	6/23/6/23/6
112	1553223233344	3x300	6/23/6/23/6

This list can be filtered by all fields

+ Add | - Delete

Plan details

No 102 | Width 1136 mm
Plan creator testadmin | Spread margin 2 mm
Creation date 11.2017 | Cutting margin 3 mm
Paper on top ◉ Surface ○ Background
☐ Multitac ☐ Perforation ☐ Rewindable

Customers
Test customer
Imaginary customer

EAN-codes
1234567890123
9999999999999
5555555555555
6666666666666

Duplicates for this plan

No	EAN-code	Bands	Stripes
106	1234562890123	2x200	6/23/6/23/6
110	2234562890123	2x200	6/23/6/23/6

This part would not be required. If the user starts entering a new plan, the application would automatically check if a duplicate exists and if it does, it would select it from the plan list. The user could then simply add the necessary customers and EAN-codes to their corresponding boxes, save the plan and send it to production.

Notes

Lorem ipsum dolor sit amet, consectetur adipisicing elit, sed do eiusmod tempor incididunt ut labore et dolore magna aliquia. Ut enim ad minim veniam, quis nostrud exercitation ullamco laboris nisi ut aliquip ex ea commodo consequat. Duis aute irure dolor in reprehenderit in voluptate velit esse cillum dolore eu fugiat nulla pariatur. Excepteur sint occaecat cupidatat non proident, sunt in culpa qui officia deserunt mollit anim id est laborum.

Background a little out from side B | Add | Save

Currently the comments in the grey area. They are apparently usually the same phrases, so we could have a list of them here and the user could simply select which ones to add and they'd appear at the end of the Notes-field.

This would add a new row with the next available ID number.
It would also select it so the data shows in the details view.
The values would be empty at the start or most of them could be automatically fetched based on the machine selected, the user who's logged in and the date.

Band 1 | - Delete band | Width 250 | Amount 2 | 1st stripe adhesive ☑

Stripe widths

1	2	3	4	5	6	7	8	9	10	11	12	13
6	6	23	6	23	6	23	6	23	6	23	6	23

+ Add stripe | - Delete stripe | Clone stripe(s)

Confirmation should be asked

Band 2 | - Delete band | Width 160 | Amount 1 | 1st stripe adhesive ☐

Stripe widths

1	2	3	4	5	6	7	8	9

A new block could also be added by having the last block selected and pressing tab

+ Add band | Clone band | Save

Adds a new band with empty values

Selected band on coil | Overall width 1000 mm | Adhesive 78%

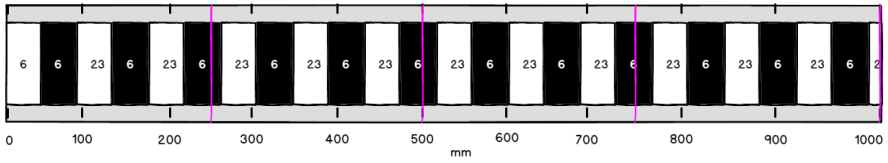

Image for the SELECTED BAND ONLY

Slitting point for a single band | Adhesive stripe | Non-adhesive stripe

Logo | PG Blades | Machines | Users | Welcome Test user | Profile | Logout

Factory Tampere **Machine** CM1
Width 1136 mm
Spread margin 3 mm **Slitting margin** 2 mm
Paper on top ☐ **Perforation** ☐ **Rewindable**
◉ Surface ○ Background

Description
Muovikaavari.
Kaavarikuva täytyy kääntää ennen tulostusta --> EI URKATA!

The selected cell's text fields become modifiable

Factory Tampere **Machine** CM6 UV-hotmelt
Width 1030 mm
Spread margin 0 mm **Slitting margin** 0 mm
Paper on top ☐ Perforation ☑ Rewindable
○ Surface ◉ Background

Description
Metalli folioVara

Factory Tampere **Machine** CM7 Curtain
Width 1100 mm **Slitting margin** 0 mm
Spread margin 0 mm
Paper on top ☑ Perforation ☑ Rewindable
◉ Surface ○ Background

Description
Muovikaavari.

Factory Tampere **Machine** TACM9
Width 1000 mm **Slitting margin** 0 mm
Spread margin 2 mm

Description
Opaque colour

+ Add | - Delete | Save

Requires a table cell to be selected. Confirmation should be asked.

Makes a new table entry with all values as empty, much like in the users view

Factory	Tampere	**Machine**	CM1
Factory	Tampere	**Machine**	CM6 UV-hotmelt
Factory	Tampere	**Machine**	CM7 Curtain

Opens a small overlay with a list of factories/machines

Requires a row to be selected in the table

Dis makes dis

Logo | PG Blades | Machines | Users | Welcome Test user | Profile | Logout

First name Matti **Last name** Meikäläinen **Username** MMe **Password** ****** **User level** ◉ Admin ○ Editor ○ Viewer

Attached machines −

Factory	Machine
Tampere	CM1

+ Add - Delete

First name Leila **Last name** Hämäläinen **Username** LHa **Password** ****** **User level** ○ Admin ◉ Editor ○ Viewer

Attached machines +

First name Urho **Last name** Kekkonen **Username** Kekkone **Password** ****** **User level** ◉ Admin ○ Editor ○ Viewer

Attached machines +

First name Perus **Last name** Jantteri **Username** PJa **Password** ****** **User level** ○ Admin ○ Editor ◉ Viewer

Attached machines +

First name **Last name** **Username** **Password** **User level** ○ Admin ○ Editor ◉ Viewer

Attached machines +

+ Add - Delete Save

PG blade drawing

Factory: Tampere

Machine: CM1

PG Blade ID: 101

Use date: 18.07.2017

Notes: Green Teflon material

Slitting line

Width: 1136 mm

PG Blade turned: ☐

PG Blade box is checked if the thing should be turned

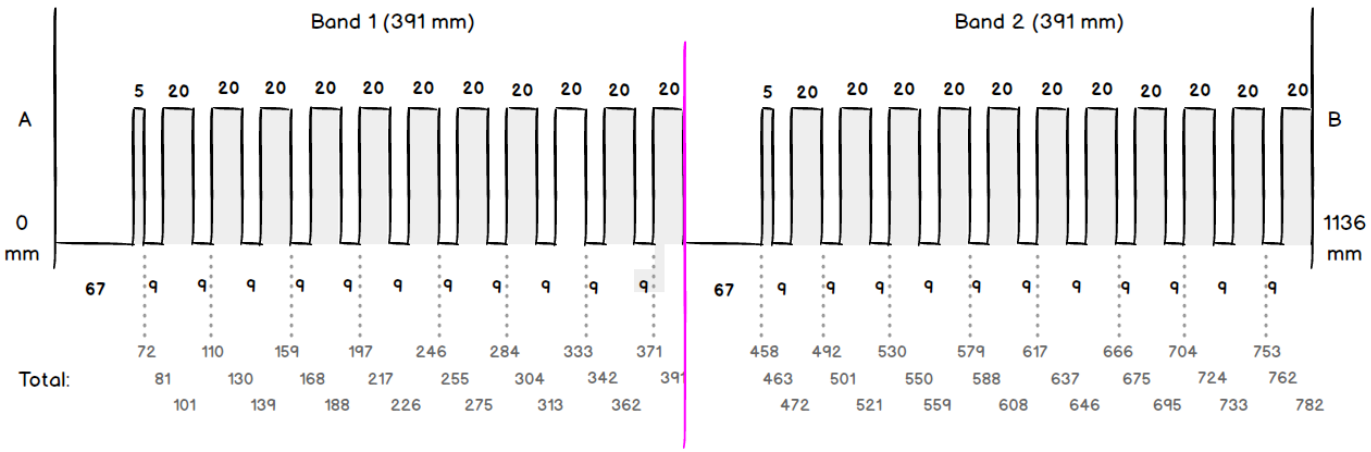

Display Lamination ☑ Notes ☑ Slitting instructions ☑

INSTRUCTIONS

Factory: Tampere Machine: CM1 PG Blade ID: 101

Use date: 18.07.2017 by Kekkone EAN-code: 09823759864

Adhesive: 87%

PG Blade turned

- Horizontal flip ☐
- Vertical flip ☐

Coils: 1 x 500, 1 x 250, 1 x 200

Lamination

Backing 1 out from B side
Run through rewinding
Face on top with rewinding
Perforation

Could be a similar tabbed solution as below if multitac is selected

Notes

Lorem ipsum dolor sit amet, consectetur adipisicing elit, sed do eiusmod tempor incididunt ut labore et dolore magna aliqua. Ut enim ad minim veniam, quis nostrud exercitation ullamco laboris nisi ut aliquip ex ea commodo consequat. Duis aute irure dolor in reprehenderit in voluptate velit esse cillum dolore eu

Face | Backing 1 | Backing 2

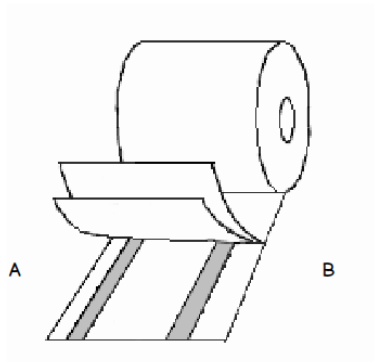

Coil: 1 x 500 mm Layer: Face

A | 6 | 6 | 23 | 6 | 23 | 6 | 23 | 6 | 23 | 6 | 23 | 6 | B

Adhesive stripe Non-adhesive stripe

Face | Backing 1 | Backing 2

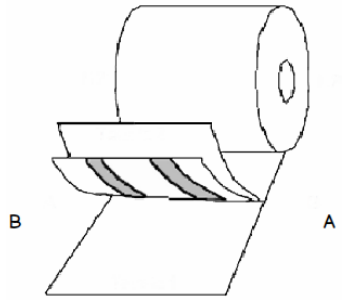

Coil: 1 x 250 mm Layer: Backing 1

B | 6 | 6 | 23 | 110 | 23 | 6 | A

Adhesive stripe Non-adhesive stripe

Face | Backing 1 | Backing 2

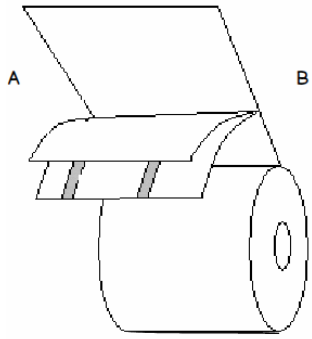

Coil: 1 x 200 mm Layer: Backing 2

A | 6 | 6 | 23 | 6 | 23 | 6 | 23 | 6 | 23 | 6 | 23 | 6 | B

Adhesive stripe Non-adhesive stripe