Advances in Colloid and Interface Science 157 (2010) 75–90

Contents lists available at ScienceDirect

Advances in Colloid and Interface Science

journal homepage: www.elsevier.com/locate/cis

Self-organization in the flow of complex fluids (colloid and polymer systems) Part 1: Experimental evidence

A.Ya. Malkin *, A.V. Semakov, V.G Kulichikhin

Institute of Petrochemical Synthesis, Russian Academy of Sciences, Leninskii Prospect, 29, 119991, Moscow, Russian Federation

ARTICLE INFO

Available online 18 April 2010

Keywords:
Self-organization
Micellar colloids
Suspensions
Polymer liquids
Vorticity
Banding
Shark-skin
Wall slip
Elastic liquids

ABSTRACT

Different types of regular and irregular self-organized structures observed in deformation of colloid and polymer substances ("complex fluids") are discussed and classified. This review is focused on experimental evidence of structure formation and self-organization in shear flows, which have many similar features in systems of different types.

For single-phase (uniform) polymer systems regular periodic surface structures are observed. Two main types of these structures are possible: small-scale regular screw-like periodic structures along the whole stream (usually called "shark-skin") and long-period smooth and distorted parts of a stream attributed as a "stick–slip" effect. The origin of surface irregularities of both types is elasticity of a liquid. In the limiting case of high enough Weissenberg numbers, medium loses fluidity and should be treated as a rubbery matter. The liquid-to-rubbery transition at high Weissenberg numbers is considered as the dominating mechanism of instability, leading in particular to the wall slip and rupture of a stream.

Secondary flows ("vorticity") in deformation polymeric substances and complex fluids are also obliged to their elasticity and the observed Couette–Taylor-like cells, though being similar to well-known inertial secondary flows, are completely determined by elasticity of colloid and polymeric systems.

In deformation of colloidal systems, suspensions and other dense concentrated heterophase materials, structure formation takes place at rest and the destroying of the structure happens as the yield stress. In opposite to this case, strong deformations can lead to the shear-induced structure formation and jamming. These effects are of general meaning for any complex fluids as well as for dense suspensions and granular media. Strong deformations also lead to separation of a stream into different parts (several "bands") with various properties of liquids in these parts.

So, two principal effects common for any polymers and complex fluids can be pointed at as the physical origin of self-organization in shearing. This is elasticity of a liquid and a possibility of its existence in different phases or relaxation states, while in many cases elasticity of a fluid is considered as the most important provoking factor for transitions between different types of rheological behavior, e.g. the fluid-to-rubbery-like behavior at high deformation rates and the transition from the real laminar flow to wall slip.

© 2010 Elsevier B.V. All rights reserved.

Contents

1. Introduction . . . 76
2. Regular structures in single-phase systems . . . 76
3. Viscosity evolution in formation and destruction of a structure . . . 79
4. Formation of structures in flow of suspensions . . . 82
5. Vorticity . . . 84
   5.1. Introduction. Vorticity — Couette–Taylor cells . . . 84
   5.2. Vorticity in elastic fluids . . . 84
   5.3. Vorticity in micellar colloid solutions . . . 86
6. Banding . . . 86

* Corresponding author.
E-mail address: alex_malkin@mig.phys.msu.ru (A.Y. Malkin).

0001-8686/$ – see front matter © 2010 Elsevier B.V. All rights reserved.
doi:10.1016/j.cis.2010.04.002

7. Conclusion . . . 87
Acknowledgments . . . 88
References . . . 88

1. Introduction

The term "self-organization" was introduced into scientific language by Ashby [1]. Later this term was spread to numerous physical and physical–chemical phenomena. The general belief is that there are several definite signs of this process. They include:

- the energy exchange with outer space;
- formation of a new regular order characterized by the coherent behavior of the elements of a medium observed on a macroscopic level, it being known that the macroscopic behavior of such a system is described by a few structural and governing parameters in opposite to chaotic movement of the continuum; and
- the spontaneous formation of the order takes place as the phase transition at some critical threshold of a governing parameter.

It is important to add that the effect of self-organization is realized via formation of dissipative structures (as was first noted by Prigogine [2]). In addition, it is noteworthy that the commonly utilized mathematical instrument used for quantitative studies of the self-organization is the analysis on non-linear equations used for describing concrete processes.

These short introductory remarks appeal to determine the place of this review devoted to self-arrangement in rheologically complex matters (polymers and colloids) in the great field of conceptions of modern physics on the structure and transitions in a condensed matter.

The outer source of energy income in all cases under discussion is the deformation (mainly, shearing) of a continuous medium. It might be an initially homogeneous polymer melt or solution, colloid system of a multi-component homogeneously mixed blend. The subject of the following discussion is regular surface or internal regular macroscopic structures, which appear as a result of deformation under overcoming some threshold.

The structure of this review is built in the following manner. It consists of *two parts*. The *first* one is devoted to listing and quantitative analysis of the numerous known experimental facts of self-arrangements in fluids with complex rheological properties. In the *second* part, we will try do systematize general theoretical models, which were proposed to predict and/or describe the effects of self-organization as the consequence of special rheological properties of these media.

The limiting case of the deformation-induced self-arrangement in polymers is crystallization above the equilibrium melt temperature. There are three sides of this story — the shift of the equilibrium point of the phase transition, the change in the kinetics of crystallization and the formation of oriented structure composed of extended chains. Numerous publications devoted to these phenomena and several comprehensive reviews have been published. Those who are interested in this particular problem are referred, e.g. to papers [3–12], which do not exhaust this theme but give quite clear presentation on this line of investigations. Meanwhile, this direction of studies still lies somewhat out of the frames of this review, where special–temporal structures of the other scale range, much bigger than the crystalline units will be discussed.

We shall focus mainly on two kinds of materials — polymeric substances (solutions and melts) and surfactant wormlike micelles. The analogy between polymer macromolecule and wormlike micelles is rather evident: like flexible-chain macromolecules, micelles are elongated and flexible colloid-size complexes consisting in a large number of interacting surfactant molecules in a continuous medium. The special features of the rheology and structure formation of micellar solutions were the subject of studies during many years, though just during the last years one can see the drastic growth of attention to the behavior of micellar colloid systems reflected in several reviews [13–20], which contain a summary of the experimental facts as well as a discussion on experimental methods. We would like to draw attention to the similarity in the rheological and structural behaviors of micellar colloid systems and polymers because it will clarify the basic physical nature and methods of quantitative description of self-organization in materials of both types.

Meanwhile it appeared necessary to include into consideration also colloidal and micro-size suspensions and shortly touch granular media because we see the universality of some phenomena of self-organization in shearing for all these materials.

We suppose that two determining factors leading to self-organization in shearing are common for all these systems. These are shear-induced structure rearrangement resulting in the existence in different states of a matter and elasticity which can either be independent property of a medium by itself or promote structural (or relaxation) transitions. These factors will stand behind the whole discussion in this review.

2. Regular structures in single-phase systems

Typical single-phase materials of interest for this discussion are homogeneous polymer melts and solutions. Instabilities in fluids of this type are well known and described in hundreds of original papers and reviews (see e.g. Denn's review on earlier investigations [21], his very complete review of the field up to 2001 [22], Larson's review [23] as well as the latest one [24]).

The following typical effects have been described and continue to be the objects of studies:

- periodic regular screw-like surface defects at the stream leaving a capillary, ordinary attributed as the "shark-skin" (see, e.g. [25–28]); Fig. 1 illustrates this phenomenon, showing the transition from the smooth surface (left picture) to slight surface disturbances (central picture) and finally to the regular screw-like surface structure;
- stick–slip effect attributed as the periodic alternation of rough and smooth surfaces (Fig. 2) usually treated as the consequence of surface slip and volume flow with "zero-velocity-at-a-wall" condition (e.g. [29–33]); and
- large-scale regular stream distortions (Fig. 3) with a pitch of the order of the jet radius (e.g. [34]).

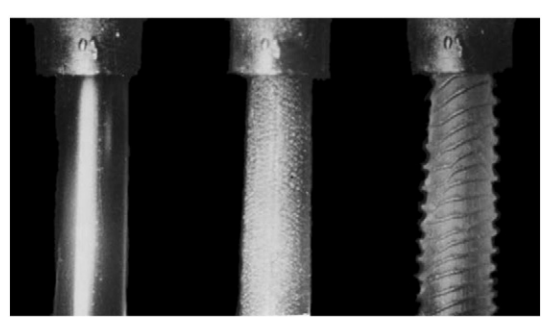

Fig. 1. Typical shark-skin surface of an extrudate transition from a smooth surface to the regular surface structure (Lab of Polymer Rheology, Institute of Petrochemical Synthesis, RAS).

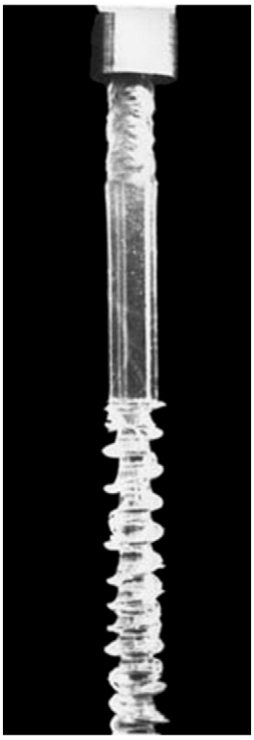

Fig. 2. Stick–slip phenomenon in flow of a polymer melt (Lab of Polymer Rheology, Institute of Petrochemical Synthesis, RAS).

We suppose that the mechanism of all three effects can be related to the single general reason, which was firstly described in [35–39] as "spurt" and its physical content is the relaxation transition from fluid to solid-like (more exactly, rubbery) state. The direct connection of this effect with the wall slip was documented in many experimental studies (see e.g. earlier publications [40–43], the latest are [44,45] and all of them contain numerous references to previous investigations).

The above described regular structures have a surface character. Meanwhile, they are related to the constitutive state of a medium. Indeed, the general belief is that linear polymers can exist in different relaxation states and it is easily observed in the standard experiments when frequency of oscillations varies in a wide range. In particular, the transition from the fluid ("terminal") zone into a rubbery zone takes place at some definite frequency for a monodisperse specimen and this transition becomes not so certain for polydisperse polymers. It was supposed that the same is true if one is to consider shear rate instead of frequency [37,38].

Fig. 3. Large-scale surface defects in flow of a polymer melt (Lab of Polymer Rheology, Institute of Petrochemical Synthesis, RAS).

The situation is illustrated in Fig. 4.

Two "monodisperse" polymers (in fact, polymers with very narrow molecular-weight distributions) can flow through a capillary channel as Newtonian fluids (remaining in a fluid state) till some value of the critical shear stress τ_s but at $\tau \cong \tau_s$ the liquid-to-rubbery transition happens and a specimen loses an ability to flow because the maximal relaxation time of an the entanglement junction, θ_{ent}, becomes shorter than the characteristic intrinsic deformation time, equal to reciprocal shear rate. Surely, this is the reflection of the critical Weissenberg number, Wi, describing this transition:

$$Wi = \theta_{ent}\,\dot{\gamma}. \tag{1}$$

The θ_{ent} value depends on the molecular weight (proportional to $M^{3.4}$) and therefore the critical shear rate strongly decreases in the increase of molecular weight (compare the flow curves for M_1 and M_2 specimens).

The similarity of the relaxation states in oscillations and in stationary flow with different shear rates is characteristic for so-named Cox–Merz materials [46].

What happens to a polydisperse polymer modeled by the mixture of M_1 and M_2 in Fig. 4? The mixture flows as a Newtonian fluid at very low shear rates only. Meanwhile, when shear rate reaches the limiting value of the fluid-to-rubbery transition of the high molecular-weight fraction (shown by dots in Fig. 4) it loses fluidity and then behaves as the solid-like filler. It provides the non-Newtonian branch for a flow curve of a mixture.

This scheme, besides all others, explains the non-Newtonian behavior of polymer melts observed in the wide shear rate domain as the consequence of polydispersity of real polymers due to consequent elimination of fractions with higher molecular weights from the flow state in the increase of shear rate. Actually, this approach provides the method of a correlation of the flow curve shape with the molecular-weight distribution [47,48].

For the aims of this discussion, it is important that a polymer melt can exist in two different relaxation states — liquid and rubbery-like. Being in a rubbery state, a polymer melt does not flow and behaves in a solid-like manner. A transition of such kind becomes very obvious in uniaxial extension, where one can see the shortage of irreversible deformations and the continuous increase of rubbery deformations along with the increase of deformation rate. Finally, no irreversible deformation can be detected and the extension of a stream is completely reversible. Then the rupture of this rubbery-state polymer happens quite analogous to the rupture of cured elastomers [49,50]. Then deformation of a rubbery-like entangled polymer at high stresses cannot be treated as the flow of a continuum as in the case of a fluid state. One can suppose that at high deformation rates it behaves more like a granular medium.

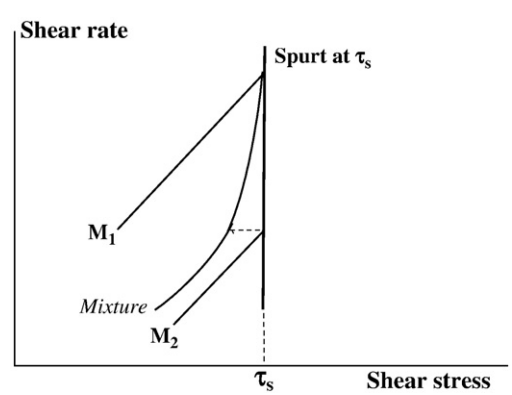

Fig. 4. The spurt effect for monodisperse specimens with molecular weighs M_1 and M_2 and their mixture.

Bearing in mind a possibility of two relaxation states for a polymer melt and its solid-like mode of rupture at high deformation rates, we can discuss the instability and regular structure formation in polymer melts (as well as in concentrated solutions).

The origin of the shark-skin effect seems rather clear, at least on a qualitative level. The crucial events perform at the exit section of a channel, which is the point of singularity (Fig. 5). Indeed if the velocity profile inside of a channel — A in the left part of the figure — is parabolic (or something different for a non-Newtonian fluid) with zero velocity at the wall, the velocity profile of a stream leaving a channel becomes flat — B in the right part of the channel.

The section *X*–*X* is a zone of the rearrangement of a velocity profile and it happens by tearing off a melt from a wall accompanied by release of normal (tensile) stresses. If these stresses exceed the threshold of the melt (more exactly — of a rubbery-like material) strength the rupture of a material at the surface occurs [51]. Surely, the exit section is the natural point of the stress concentration that was confirmed by numerous direct measurements of stress distribution (see, e.g. [52]). So, the appearance of a rupture in this section is the consequence of the rubbery-like behavior of a melt. For the goals of the current discussion, it is important that this effect occurs in a self-oscillation mode creating the regular structure (or disturbances) of a surface.

To make this point clearer let us compare the separation of a melt from a wall with the reverse movement — sliding of a rigid scraper along an elastomer surface. An edge of a moving body draws a part of the substrate material due to the adhesion forces creating large rubbery deformations. Then a sliding body tears off from a substratum and the elastic recovery takes place. It creates periodic waves and periodic traces [53,54]. Normal stresses tear off a rubbery-like polymer from a wall at the exit section. However the melt before tearing is stretched and connected to the wall due to the adhesion. Just after the surface layer loses the contact at some critical deformation next portion of a melt begins to stretch and the process repeats leading to self-oscillations.

In increasing the stress (or the flow velocity), the loss of adhesion spreads inside a channel, the scale of the disturbances grows up and it results in a wall slip inside a channel and appearance of caverns. This process was also treated as kinetic interaction of a polymer with a wall [55].

So, one can conclude that the above-mentioned physical phenomena — the relaxation fluid-to-rubbery transition and the rupture of a rubber-like material — govern the appearance of the regular surface structure.

The role of elasticity in the shark-skin phenomenon can be supported by the newest measurements of the pressure fluctuation of a polymer melt inside a channel [56]. Direct measurements demonstrate that there is a spectrum of oscillations and one can believe that such pressure fluctuations are characteristic for elastic medium. So, new aspects in the problem of shark-skin (which looked quite clear) appear.

A periodic stick–slip effect is also related to the same mechanism: stick is attributed to the fluid state and flow while slip happens when a melt transits to a rubbery state at high deformation rates. This effect is clearly observed in an experimental scheme of the flow of a melt through a capillary when a melt is pushed into a capillary from a large-volume barrel where a piston is moving with a constant velocity (Fig. 6).

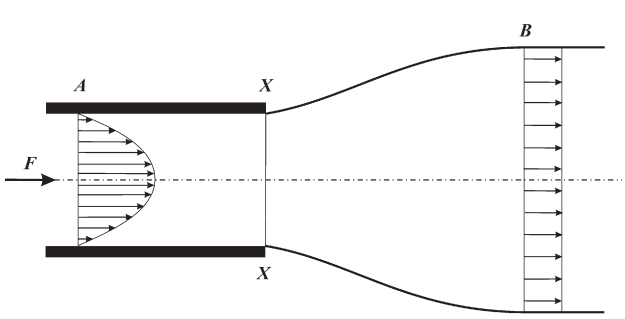

Fig. 5. Rearrangement of a velocity profile at the exit of a barrel die.

Under high enough pressure, a melt in a barrel is compressed and when (volume) elastic forces exceed some threshold a melt is pushed out a capillary with high velocity. It happens in the regime of sliding. Then, at the decrease of pressure the relaxation takes place and the melt moves through the capillary with much lower velocity in the regime of flow. Then the sequence of events repeats leading to stick–slip self-oscillations [57–63].

The presentation of this phenomenon is shown in Fig. 7. The left part of this figure shows the time scanning of the effect while the right part demonstrates the relationship between pressure and output, which is "a flow curve" of a material. The letters at the curves correspond to the letters at the left side of the figure. So, the flow curve appears double-valued and this reflects the existence of the two (relaxation) states of the material, which can behave as in a fluid or in a rubbery mode depending on the shear rate, or output.

The existence of a double-valued flow curve is the basic factor for appearance of self-oscillations. In this case, the phenomenon is related to the volume elasticity of a medium. The quantitative theory of this effect was proposed in [64] where a special form of the slip law was assumed.

So, we see that all effects responsible for stream distortions in flow of polymers perform in near-wall layers. It is quite natural because this is the zone of the maximal stresses. Transitions can happen here while a material in the central (less stressed) part of a stream still remains fluid.

It is interesting to mention that direct measurements of the velocity profiles confirm that real jumps between flow (with zero velocity at the wall) and slip (with strong non-zero wall velocity) were observed [29,65].

This phenomenon was observed in capillary flow for not only polymer melts but also micellar solutions [66,67]. So, the behavior of both media is similar.

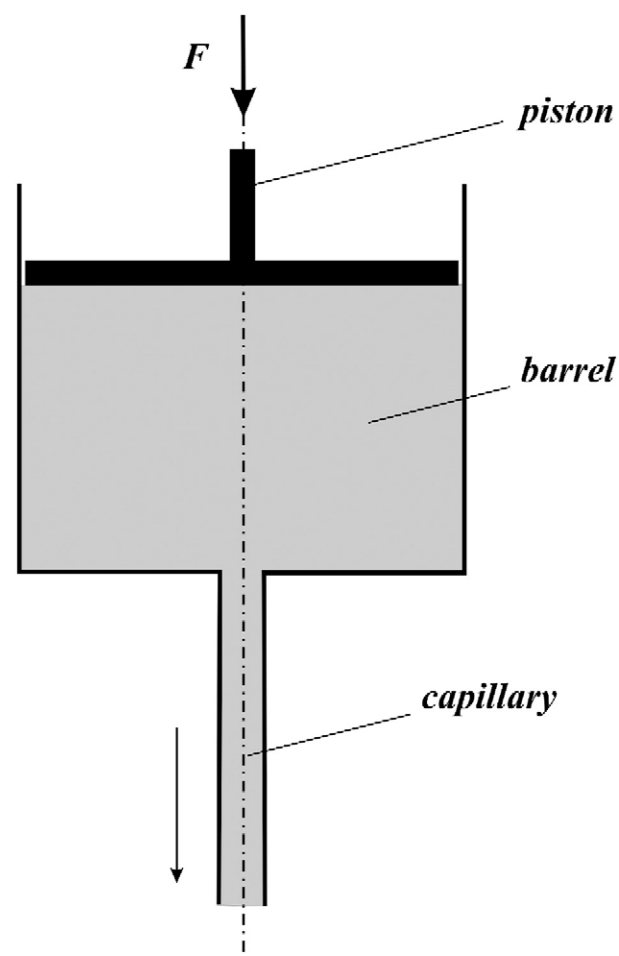

Fig. 6. A scheme of the experiment when a melt is pressed through a capillary from a large-volume barrel by a piston under constant pressure.

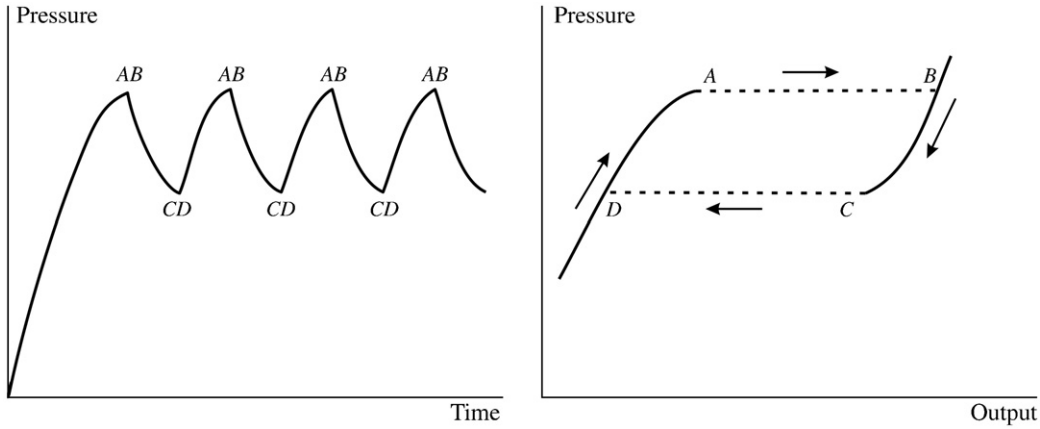

Fig. 7. Self-oscillations provided by the volume elastic compression of a melt in a large-volume barrel and leading to the stick–slip phenomenon.

There is that other vision proposed in opposite to the conception of the fluid-to-rubbery transition. It is that the idea of the strong stretching and alignment of macromolecular chains, which were coiled and entangled in the initial undeformed state (Entanglement–Disentanglement Transition — *EDT*) [68–72]. It was supposed that the near-wall layer consists of disentangled chains and the viscosity of this layer is much less than that of a melt consisting in entangled macromolecular network. It means that there is no slip but the real flow of a low-viscous layer takes place near a wall.

Regardless of the correctness of this supposition, again the necessity of double physical state of a medium was assumed. Nevertheless we think this vision contradicts a dozen of experimental evidence, which unambiguously demonstrated that real slip with separation of a melt from a solid wall takes place. Besides, this conception does not take into account evidently observed elasticity of a melt dominating at high deformation rates.[1]

A possibility of the wall slip was discussed for years starting from the old publication of Mooney [73] who proposed a well-known method for the estimation of the wall slip velocity basing on the experiments performed with capillaries of different radii. Later a lot of experiments have been done proving a reality of slip by this indirect method (see, e.g. [74]). The results of measurements of electrification of a polymer melt stream leaving a metal capillary in the unstable mode are also evidence of the wall slip [75–77]. It is worth mentioning that several modern investigations carried out direct measurements of the velocity profiles by different methods. The results of these studies convincingly demonstrated the existence of the wall slip in flow of polymer melts at definite conditions [29,30,78] (the first and clearest experimental evidence of the wall slip in polymer melt flows were rendered by Dealy with coauthors [40,41,44,79,80]). It is also interesting to mention that the slip can also be treated not as a static phenomenon but as an effect related to the relaxation behavior of polymer melts [81].

Direct methods of velocimetry also proved the co-existence of several zones of deformation rates ("banding", or co-existence of different states of a polymer liquid) [82,83]. The value of direct methods of velocimetry was also mentioned as important and directly speaking about a state of suspensions [84] and emulsions [85].

So, the discussion of the origin of the self-organization with formation of regular structures in flow of single-phase polymer solutions and melts leads us to the conclusion that the following physical causes are responsible for this phenomenon regardless of its concrete form: the basic property is elasticity (rubbery elasticity), leading to the existence of two possible states of a medium and a double-valued flow curve (Fig. 7, right). The fluid-to-rubbery-like transition in the behavior of an elastic liquid leads to the wall slip and rupture of a liquid if only it were a rubber.

3. Viscosity evolution in formation and destruction of a structure

In this and the next sections, we will deal with multiphase (or multi-component) "mild" systems of several types: colloids, highly concentrated emulsions, polymer blends and suspensions with dispersed particles of such size that allow us to exclude effects provided by the Brownian movement.

The relationship between hydrodynamic and Brownian effects is determined by the dimensionless Péclet number, Pe, expressed as

$$Pe = \frac{\eta_m \dot{\gamma} R^3}{k_B T} \tag{2}$$

where η_m is the viscosity of a continuous medium, R is the characteristic size of dispersed particles, k_B is the Boltzmann constant, and T is the absolute temperature. Effects related to the Brownian movements are negligible at $\mathrm{Pe} \gg 1$.

The structure formation phenomena in two-component disperse systems, in which the dispersed particle size is much larger than the colloid scale size (that is granular matters or suspensions of rather large particles), meanwhile, are very similar to those observed in colloids and the character of viscosity evolution is also analogous in all cases under discussion.

The viscosity decrease in the increase of shear rate (or shear stress) was treated as a consequence of the destroying of the structure in polymer solutions and colloid systems from the first steps of rheology (W. Ostwald: "*sructurviscosität*", 1925, and W. Philippoff in his monograph "*Viscosität der Kolloide*", 1942). Meanwhile, this approach to the viscosity anomaly is neither universally (see above the discussion on the correlation between non-Newtonian behavior and molecular-weight distribution of polymer melts) nor physically clear because saying "structure" everybody can have in mind different things.

However there are two limiting situations, in which deformation definitely leads to structure transformation. One of them is yielding and the deformation destroys an initial solid-like structure creating a possibility of flow. The other opposite case is shear-induced structure formation, which can result in transforming a medium from a liquid to a solid-like state.

The mechanical term "yielding" relates to visco-plastic media and, by definition, means that a matter behaves in a solid-like manner up to some critical stress τ_Y and at stresses beyond τ_Y it flows as any liquid. The transition through τ_Y corresponds to the destroying of the initial

[1] The discussion of different proposed mechanisms of the effect under consideration is out of the frames of this review. However a simple argument against the EDT model is a well-known school experiment with "Silly-Putty": at high deformation rates (at a shock) this linear polymer behaves totally as an elastic body but not as a low-viscous liquid, as could be expected according to the EDT conception predicting the decrease of viscosity.

(regular or random) structure, its strength being determined by τ_Y. This solid-like structure can be created by interacting solid particles in suspensions as well as interdroplet interactions in emulsions and other colloid systems including micellar solutions [86]. Surely, the level of the yield stress depends on the physical nature of interactions. It is also interesting to mention that the solid-to-liquid transition (equivalent to yielding) can be driven either by stress or by temperature changes as was demonstrated for aqueous colloid solutions [87]. This is hardly possible for rigid structures due to slight temperature dependence of forces creating this (athermal) structure, but becomes real for mild colloid systems.

A rather expressive example of yielding in mild colloid systems is the existence of the yield stress in highly concentrated emulsions [88–92]. It was established by direct observations that initial surfactant rich micelles of nanometer size can aggregate forming a micron-size fractally linked blocks of lamellar phase [93].

The formal approach treats the yield stress as a single definite value [94]. Meanwhile, it does not exactly correspond to the real physical picture of yielding. As was justly noted [95], the answer to the question "Does the yield stress exist?" requires the comment: "… *it depends on what you mean by*…" the yield stress. Indeed, in many cases, the transition from the solid-like to fluid state proceeds not at the point but in some range of stresses and requires some time because a solid-like structure may not be instantaneously broken but characterized by some life-time (durability). The time-dependence of the yield stress was demonstrated as far back as in [96]. This is illustrated in Fig. 8.

The left part of the figure shows "classical" yielding: if the criterion $\tau > \tau_s$ is fulfilled deformation proceeds immediately and its rate increases in the increase of stress. Meanwhile, the right part of the figure demonstrates the other type of behavior: deformation starts not immediately after application of stress but with some delay and the time before the development of flow decreases with the increase of stress. This is the effect of the long-term durability of the structure and the decrease of the durability on the stress growth. The same result was demonstrated for different systems including suspensions [97] and mild emulsions [98]. So, it is reasonable to think that the "kinetic" nature of yielding is of general value for different systems though the time constant might be very different.

The kinetic nature of yielding is sometimes expressed in the terms of so-named "static" and "dynamic" yield stress [99,100]. This approach reflects the thixotropic nature of the structure responsible for the existence of the yield stress, which is thus related to aging and shear rejuvenation of the inherent structure of a medium [101,102]. Treating the yield behavior as a competition between aging and shear rejuvenation was also developed in [103], where multi-arm star polymers were used as model soft colloids. It is interesting to stress that this approach is considered as universal for very different soft matters (there is a great number of references to earlier publications related to different materials — micelles, grafted particles, soft pastes, foams and emulsions) [103,104].

The effect of yielding and kinetic character of this phenomenon is important for the subject of this discussion because it leads to a possibility of different states of a material in flow and multi-valued flow curves, i.e. to instability and self-organization of a medium [105]. The general understanding of instabilities in granular fluids leading to spinodal decomposition can be based on the Landau–Ginzburg theory of the time-dependent transition and formation of the regular vortex patterns [106].

The rheological arguments allow us to make only formal classification of the types of material behavior in shearing. Meanwhile, it would be interesting and important to understand the peculiarities of a real structure of different condensed matters and its transformation in shearing. This problem was intensively investigated by different direct methods during the last years that allowed the investigators to visualize the effect of flow and rest on the structure formation in colloid suspensions and gels [107–111]. Meanwhile, it was concluded that no universal concept can be applied for structure in these matters [112] and "particle clusters" is the general term used for characterizing the self-organized structure in these materials.

A paper [113] contains an excellent review of earlier publication in this field. This publication also presents a rather impressive picture of local and large-scale structure formation and its break-up for the model 2D colloidal gels with different concentrations of a dispersed phase. The authors succeeded to follow different steps in the self-organization of the percolation structure responsible for the strength of a system (rheologically treated as yielding) and the kinetics of the cascade of break-up events leading to the transition from a solid-like state to flow. The authors of this paper also observed the formation of separate groups of particles as a result of break-up of the initial structure. These groups can be characterized by some radius of gyration which is a quantitative measure of the gel structure, Finally, the authors estimated such important factors as the dependence of the number of broken bonds as a function of strain and found the trend in the fractal dependence of the critical deformation (in the yield threshold) on concentration reflecting the physical mechanism of yielding. It is also important to stress that the long-distance heterogeneity plays a dominant role in the process of transition to irreversible deformations [113]. Analogous results were obtained in [114], where it was demonstrated that a local structure of the colloidal gel observed after recovery is only negligibly affected by the transition through yielding, while the long-scale structures were significantly impacted.

Shear-induced structure formation at high deformation rates or in time based on rheological arguments was (possibly) firstly described by Peterlin et al. [115–117] for polymer solutions. It was shown that the presence of large aggregates can be described as time-dependent behavior due to the formation of polymer networks which are held together by reversible crosslinks which form during shearing. This

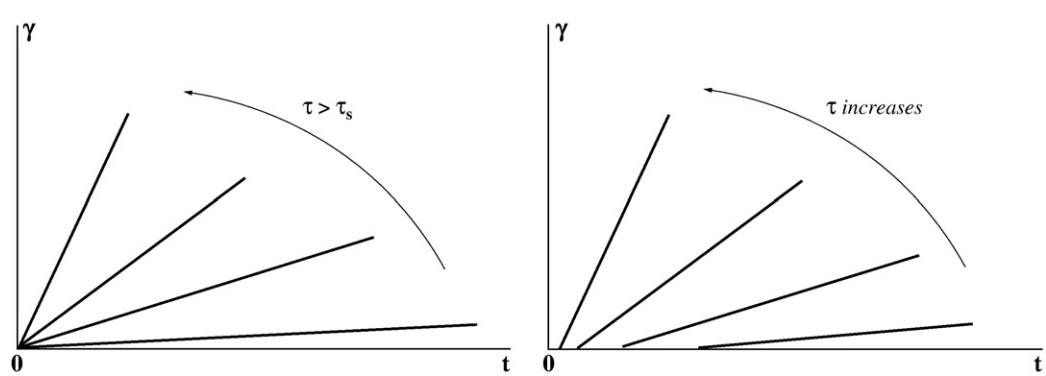

Fig. 8. Different kinds of yielding.

process leads to the increase of apparent viscosity (shear thickening) as opposite to a well-known shear thinning reflecting the destruction of a material structure.

The effect of shearing on structure formation in concentrated suspensions and the correlation of this phenomenon with the discontinuous flow curves and the dilatancy (may be firstly) were described in [118]. A possibility of shear-induced structure formation is valid for a wide range of soft matters, including not only polymers and colloids but even pitches [119], different suspensions [120] and granular solids [121].

Actually, two rather different situations of shear dependent viscosity exist.

The first one is shown in Fig. 9a and is described as the continuous growth of shear stress τ (or apparent viscosity) in time at constant shear rate. Obviously, this is the case of kinetic deformation dependence of viscosity. The second situation is presented in Fig. 9b where a flow curve (dependence of apparent viscosity on shear rate at steady state regimes of flow) is shown. Such situation is observed when apparent viscosity initially decreases with a shear rate in the domain of low shear rates and then starts to increase in the range of rather high shear rates.

The growth of viscosity up to the transition to the solid-like state is known as jamming which is the formation of a solid plug [122–124]. The authors of these publications had no doubt that the shear thickening effect is related to formation of clusters, which really were observed visually. The jamming effect has the features of the threshold phenomenon as it happens at slight increase of concentration of a disperse phase beyond some limit, φ^* (of approximately 1%, see. e.g. [122]) and this limit depends on the shear rate. The growth of apparent viscosity in the case of highly concentrated suspensions finally results in the effect of jamming when flow becomes impossible due to formation of a solid plug.

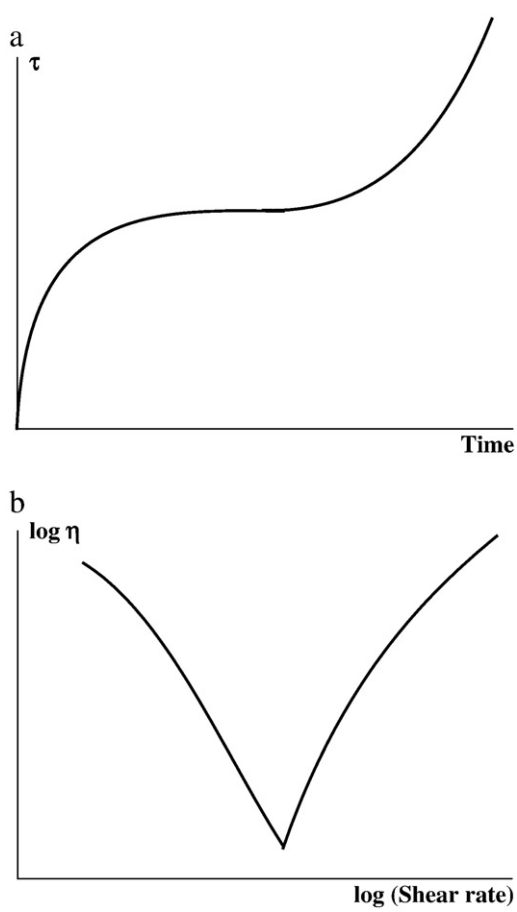

Fig. 9. The growth of apparent viscosity as a function of deformation (a) or rate of deformation (b).

Analogous effects have been observed for micellar systems [125–129], and usually the authors say about the formation of a new shear-induced phase at high shear rates. Said in either these or those words, but in all cases the creation of new ordered shear-induced structure is meant.

It is rather evident, though not always taken into account, that structure formation and jamming in particular are inseparably related to the local spatial heterogeneity [130]. This phenomenon can take place in space and in time too, leading to periodic oscillations (as shown, for example below in Fig. 10). Spatial and temporal variations of local density are typical for all colloid and granular systems [131–133] and these effects possibly are of general meaning in deformation of different multi-component materials. Density fluctuations become especially important in approaching to jamming [134]. Direct measurements demonstrated that a continuous evolution from entirely collision dynamics in flow of dense granular matters to frictional dynamics as the threshold of jamming transition is approached. Besides, and this is the most important, the evidence of spatial structure, with force fluctuations being organized into local collision chains was observed [135].

The standard understanding of jamming related this effect to the formation of irregular clusters consisting in randomly positioned solid particles. Meanwhile the other point of view exists [136]. According to this conception, jamming correlates with the disorder–order transition, the ordered structure being formed with layers of dispersed particles. The basic rheological argument advanced in support of this point of view is connected with the dependence of the critical shear rate (at jamming) on the particle size. Experimentally, this dependence obeys the power law with the exponent -2 that corresponds to the model of layered structure but not -3, which would be the consequence of the model of a chaotic structure. In this case, the viscosity growth is related to instability of the regular packing of solid particles. Meanwhile this approach does not exclude that the just random clusters may play a key role in suspensions of nano-sized particles when the Brownian movement of particles is still important. Surely, the intermediate situation is also possible.

The growth of viscosity in shearing due to formation of regular (or random) structures is the effect treated as rheopexy (or antithixotropy) [104].

The mesoscopic structure formation in flow of wormlike micellar surfactants systems (colloids) is the result of a shear-induced transition, which can have two independent or coupled forms of shear banding and liquid-crystalline (*LC*) isotropic-to-nematic phase transition. The basic structural effect is the alignment of long (semi-)flexible micelles in flow of a solution [137,138] and this phenomenon analogous to the behavior of macromolecules has been emphasized always, beginning from the first publications on the subject [139–141]. Meanwhile, it is noteworthy to mention the difference in relaxation properties of polymeric substances and micellar colloids: the viscoelasticity of even a single macromolecular chain is characterized by a rather wide relaxation spectrum with a set of relaxation times [142], while the viscoelasticity of micellar systems is well fitted by a single relaxation mode with one characteristic relaxation time [143–147] over a broad time scale.

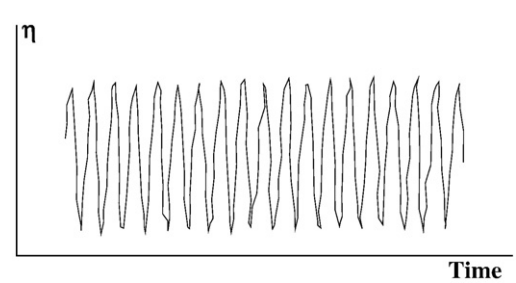

Fig. 10. Periodic oscillation of shear rate at constant stress (adopted from [126]).

The shear-induced structure formation and its break can happen in a periodic mode observed as periodic growth and sudden decay of apparent viscosity [123,148–150]. It looks like what is schematically shown in Fig. 10 (after [151]).

So, it is reasonable to treat these viscosity fluctuations as the consequent processes of formation and destruction of regular structures in suspension [152] (as well as in micellar colloid systems). Besides, it was observed that the boundary between different structure forms can also be instable [153].

Finally we see that viscosity evolution in deformation of multi-component materials reflects the structural processes which are intimately connected with self-organization and a possibility of co-existence of different structural forms with different properties. From the rheological point of view it manifests itself in multi-valued flow curves and various time-dependent effects. These processes can be independent or superimposed on non-Newtonian flow behavior in polymeric substances where the interrelation between the rate of deformation and the rate of relaxation (in the entanglement macromolecular structure) can play a dominant role.

4. Formation of structures in flow of suspensions

Flow of suspensions as multi-component systems can lead to different forms of self-organization. It depends on the rheological properties of a continuous medium as well as on the nature of dispersed particles. Two different situations might be discussed in line of the goals of this review. First, what is the role of elasticity of a fluid? Second, can the aggregation of solid particles result in self-organization regardless the rheology of a continuous medium? It is worth mentioning that the limiting case of suspension is a granular medium because in this case the continuous phase is absent at all and self-aggregation of dispersed particles can be discussed just as it is.

There are a great number of publications devoted to the structure formation in different suspensions (see, e.g. the latest publication [154] containing references to many previous important publications). Two general effects are well documented: aggregation of anisotropic particles and a possibility of their orientation in flow. This is especially true for layered nanocomposites [155] and the carbon nanotube suspensions as the newest object of investigations in this field [156]. The dominating share of these publications relates to a polymeric matrix where the role of polymeric chains with nano-particles is of primarily value for the structure and the rheology of these materials [157]. However, the shear-induced structure formation was also directly observed by different optical methods in colloidal suspensions [14], concentrated liquid crystal and colloid suspensions of anisotropic solid particles [151,158,159]. These structures looked as “randomly stacked hexagonally close packed layers” [160].

It is rather difficult to build the general picture of structure evolution in any suspensions due to a wide variation of the shape and type of possible suspended particles. This picture separates into many particular cases. Clearer and better understandable results can be obtained for suspensions of spherical particles. So, the early publication of Giesekus [161] demonstrated that the changes in the cross-section of a channel result in the displacement of dispersed balls to the outer zone of a stream up to the complete separations of solid particles from the main part of a stream inside an inlet part of a contraction. Then he also described a rather interesting phenomenon of the cluster formation of balls, which were initially randomly distributed in a viscoelastic medium (polyacrylamide solution) [162]. Possibly, the first experimental evidence of the alignment of spherical balls into regular chains was presented in [163] and the authors unequivocally stated that this phenomenon takes place in a viscoelastic medium only and the Weissenberg number (defined as the ratio of normal to shear stresses) corresponding to this effect should exceed 10. Analogous results were obtained in [164]: it was shown that glass micro-spheres dispersed in a viscoelastic fluid try to form clusters in unidirectional oscillations with the principal axis oriented along the shear direction. The formation of chain structures in planar Poiseuille flow was also observed in [165]. The earlier results were confirmed in experiments on shearing of poly(methyl metacrylate) beads in a polyacrylamide solutions: beads formed regular aligned chains [166]. Interestingly, apparent viscosity decreased in this case. The migration of spherical particles with formation of string-like structures ultimately connected to form circular rings was also documented under torsional flow [167]. Meanwhile, as was stated [168] this effect was absent in the Couette flow. It means that the chain-formation of dispersed particles is not a universal phenomenon but depends on the rheology of a continuous medium. The systematic experiments performed in [169] lead to the conclusion that particle chaining and aggregation take place in a viscoelastic liquid only if it is a shear thinning fluid and this effect was not observed for a constant viscous though elastic (so-named Boger) fluid.

The effect of balls alignment looks as shown in Fig. 11, where the left part is the initial random distribution of homogeneous balls and the right part demonstrates the effect of the necklace formation along the direction of the flow.

The effect of structure formation was also observed in colloid dispersions of homogeneous spherical particles (*colloid crystals*) [170,171]. An original version of structure formation of the same type (appearance of linear anisotropic chain-like structures) was described for aqueous emulsion with a nematic liquid crystal as a continuous phase [172].

It is worth noting that the structure formation of the above-mentioned type took place in a continuous medium demonstrating elasticity. The theoretical analysis showed that the necklace-like structure of suspended spherical particles must occur when a fluid possesses weak elasticity [173]. Indeed, from the earlier Giesekus' publications it was assumed that just elasticity of a fluid (estimated by the Weissenberg number) is the crucial factor determining a possibility of necklace-like (or thread-like) structure formation.

Meanwhile, no influence of the Weissenberg number on regular ordering of disperse phase particles up to its very high values was declared in [174]. As was said above, ordering was not observed in the Boger liquid (elastic but constant-viscosity fluid). So, possibly, the role of viscoelasticity is still open.

A large volume of investigations was devoted to the long-distance structure formation in shearing of di- and triblock copolymers. One-dimensional (lamellar) as well as 2D (tubular) structures can be observed in those cases [175–181]. This effect undoubtedly consists in the phase separation of different blocks and reminds the orientation of micellar colloid systems. The effect of shearing on the structure formation in block copolymers can be so strong that reminds the phase transition into monocrystals [182]. All these phenomena are essentially similar to the first-order phase transitions in polymer solutions and melts below the equilibrium static transition temperature (mentioned in the beginning of this review). So, this interesting field of investigations however lies beyond the boundaries of this review.

The other case of the onset of regular structures in suspensions (polymer melts loaded with particles of a solid filler) is the formation of arcs and even circles in rotational flows [183–185]. Such type of a structure can appear in strong flows of a pure elastic melt (Fig. 12).

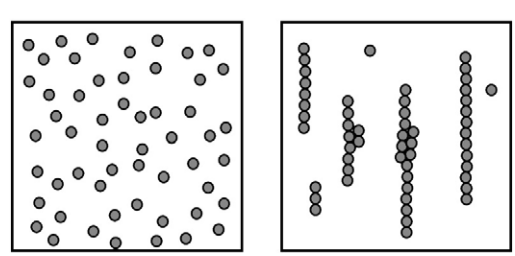

Fig. 11. Formation of “necklace-like” chain structures of solid balls placed in a deforming viscoelastic medium.

Fig. 12. Ring structure observed in strong rotational flow polycarbonate melt (Lab of Polymer Rheology, Institute of Petrochemical Synthesis, RAS).

The ring structure becomes even more impressive in rotational flow of a dispersion of solid particles in a continuous polymer melt matrix (Fig. 13).

It is interesting to add that such periodic structure is quite similar to the system of concentric circles found for a viscoelastic fluid in cone-and-plate and parallel-plate flows [186].

The effect of the onset of the ring structure in flow of a polymer blend consisting in incompatible components can be explained by the phase separation and extension of liquid drops of a dispersed phase in a shear stream. However, as was said, the ring structure in rotational flows is observed in flow of individual viscoelastic melts at some critical regimes of deformation [185]. One can suppose that it is a surface effect close by its physics to the onset of regular periodicity in capillary flows, as was described above (Fig. 7). The cause of both effects is elasticity of a fluid. The formation of concentric chains by solid particles can also be attributed to the elasticity of a continuous medium, as in Fig. 11. To compare a pure melt and a melt with dispersed solids, it is reasonable to think that particles are rather tracers, while the medium elasticity plays the primary role.

It is interesting to mention that similar patterns in flow of a liquid between rotating and stationary disks were described in [187] where the appearance of petiodic (wave or spiral structures) was attributed to instabilities of the boundary layer in a stationary disk.

The onset system of regular rings in rotational flows is analogous (at least by its appearance) to the formation of the band structure, which will be described below. It is reasonable to think that the separation of an initially homogeneous medium into two "phases" with different properties is the ground of the regular ring structure and banding. Below, it will be argued that the direct velocimetric methods really confirm the existence of two separate layers with different rheological properties. Meanwhile, to speak about polymer melts (not banding in colloid systems), direct measurements of the velocity distribution in flow of a melt between two parallel sheared plates showed the existence of a near-wall layer [71] that was explained by structure transition at the wall. Probably, this is not the case for experimental data presented in Fig. 13, because in the last figure, structure formation is not located near the wall, but spreads deep into a volume along the radius of a sample.

When we meet with a stratified structure of a suspension flow, it seems more reasonable to suppose the model of separation of a stream into components with different concentration of solid particles, one of them consisting mainly in a pure continuous phase and the second being included with filler chains as in Fig. 11. Then the non-trivial model of flow can be proposed as shown in Fig. 14 (according to [185]).

This model explains, in particular a rather unusual effect of the decrease of apparent viscosity of a filled fluid containing some amount of solid particles [183,188]. Indeed, the rate of deformation in the low-concentrated bands sharply increases and it results in the decrease of apparent viscosity of the system in a whole.

If we consider the effective viscosity of a homogenous multi-component system then the viscosity is often found to be given by a logarithmic rule of mixing:

$$\log(\eta) = \sum_i \phi_i \log(\eta_i) \quad \text{or} \quad \eta = \prod_i \eta^{\phi_i} \tag{3}$$

where the summation runs over all the volume fractions (ϕ_i) and viscosities (η_i) of the pure components. This sort of expression is commonly used to calculate the viscosity of homogenous polymer blends.

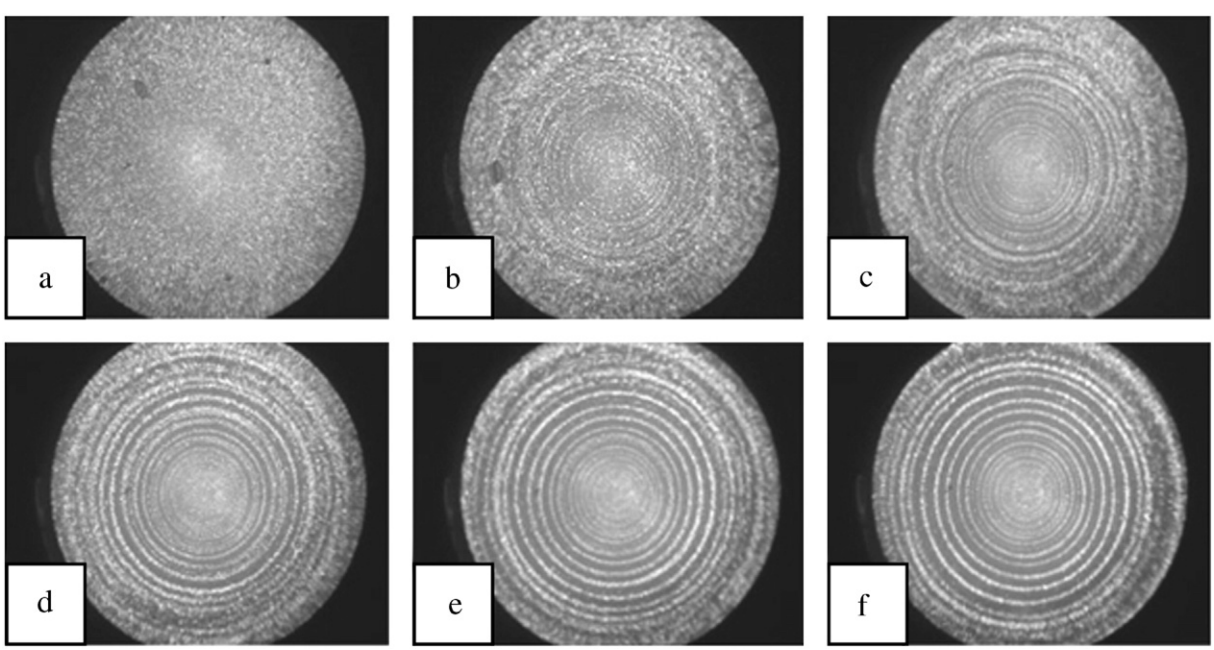

Fig. 13. The periodic ring structure in a rotational flow of polyisobutylene filled with 7% of Na-montmorillonite. Frames (from a to *f*) correspond to consequent stages of deformation at constant shear rate (Lab of Polymer Rheology, Institute of Petrochemical Synthesis, RAS).

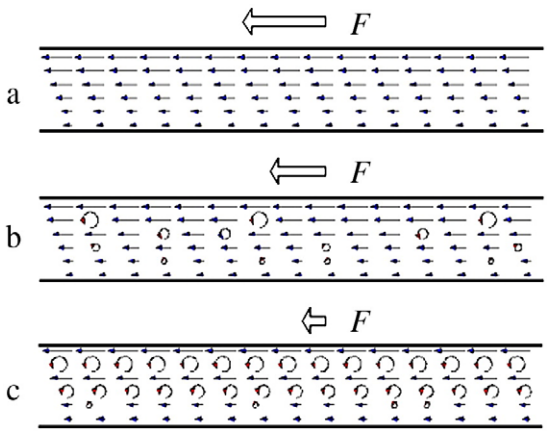

Fig. 14. A model of the transition from a laminar flow (a) to non-regular superposition of translational and rotational modes (b) and stratified flow of a heterophase system (c).

On the other hand, to assume that we have a stratified system consisting of *i* layers it is possible to obtain the following equation for apparent viscosity:

$$\frac{1}{\eta} = \sum_i \frac{\phi_i}{\eta_i}. \tag{4}$$

It is worth noting that the effective viscosity of the stratified system (Eq. (4)) is invariably lower than the homogenous mixture (Eq. (3)).

Discussing the structure formation in suspensions, it is instructive to apply shortly to granular materials, which are also suspensions of a solid phase in a very low-viscous medium (air). The general approach to the rheology of granular materials was advanced in [189], where the conception of force chain networks in granular materials was formulated, and direct measurements showed that high forces are distributed inhomogeneously in space, though one can find as well similar results in an earlier publication [121]. For understanding the structure formation in such kind of suspensions, it is important to take into account that stress distribution in these systems depends on the geometry of deformation: in isotropic compression only short-range spatial correlation of stresses exists, while shearing creates long-range spatial correlation of stresses in the direction of shearing [190]. Besides, the conception of different local rheology for dense granular flows and stress fluctuations as the initial mechanism of their movement are of basic interest for the understanding of granular media movement [191].

The rheology of granular matters was developed in several recent publications [190,192–194]. For the aims of this review, it is important that rheological models of the granular media predict the existence of the yield stress in slowly sheared granular systems [190] and this prediction might be valid to usual suspensions too. Taking into account friction between solid particles immediately leads to the prediction of visco-plastic behavior of granular systems [195], as well as concentrated suspensions.

Granular materials also tend to form regular structures in deformations. Usually it happens in vibrations when inter-particle friction is overcome and the quasi-fluid state of a system is reached. An example of such structures is presented in Fig. 15 (after [121]). The type of self-organization in this case depends on amplitude and frequency of vibrations. However it is worthy to be reminded of the results of publication [136] where a possibility of regular structure formation in jamming of granular media or highly concentrated suspensions was discussed (see above).

So we see that suspensions can form regular structures under deformation not only in boundary cases of yielding or jamming but also in curvilinear flows. Meanwhile the question concerning the input of the rheology of a continuous medium (primarily its elasticity) is still worth of further discussion and experimental investigation.

5. Vorticity

Two different structural forms in flow of a fluid are possible. One of them is vorticity and the other is banding. Vortex formation can take place in single-phase fluids. Below, two cases will be considered — vorticity in inelastic fluids obliged to inertial effects, and vorticity in an elastic media.

5.1. Introduction. Vorticity — Couette–Taylor cells

The vorticity is a phenomenon of fluid dynamics consisting of formation of closed loops or curls due to circulation or rotation in a fluid stream. It looks as a "rigid-like rotation" around axis leading to formation of a set of cells. Vorticity appears in rotational flows (e.g. flow between two rotating coaxial cylinders or a cone touching a plate with its apex). The general theory of vorticity is presented in the book [196]. One of the well-known types of vortex is the formation of Taylor cells in the Couette flow of a viscous fluid shown in Fig. 16 (the Taylor–Couette instability), where Ω_1 and Ω_2 are circular velocities of cylinders with radii R_1 and R_2, consequently.

As well known, the effect of secondary flows in rotational movement of a viscous fluid is obliged to inertial forces. The Taylor cells in flow of a viscous fluid can appear at a definite relationship between centrifugal (as a measure of inertial effects) and viscous forces, which is determined by the dimensionless Taylor number:

$$Ta = \frac{4\Omega^2 R^4}{\upsilon^2} \tag{5}$$

where Ω is frequency of rotation, R is average radius of coaxial cylinders, and v is the kinematic viscosity (Newtonian viscosity divided by density).

The vortex structure (Couette–Taylor cells) becomes possible if the Taylor number exceeds some critical value Ta*, which increases in the increase of the Ω_1/Ω_2 ratio [197], while the minimum values of Ta* is close to 1700. It is essential that the dynamic structure in homogeneous viscous fluid always exists at Ta>Ta*. The theory of this phenomenon is well known and one can find the details in [198]. Though there is the general understanding of the Taylor–Couette cells formation in viscous fluids as the effect related to inertial forces, several aspects of the phenomenon continue to remain the focus of discussions. First of all, it touches stability in the Couette flow of magnetic fluids [199–202]. Also, such problems in the Taylor–Couette instability in viscous fluids as the effect of viscous dissipation [203,204], Taylor–Couette instability in the flow of a Bingham visco-plastic medium [205], cell formation in the flow of two immiscible viscous fluids [206] have been discussed.

5.2. Vorticity in elastic fluids

The next step is the formation of dynamic structures in elastic fluids and the understanding of the role of elasticity. The viscoelastic instability and subsequent formation of a regular structure can arise from the gradient of elastic deformations (or stresses) in curved streamlines.

The transition from inertial to elastic instability depends on constitutive properties of a matter and, as shown in [207], while elasticity of polymer solutions can be varied in a wide and controlled range, it is possible to follow the transformation of the Taylor–Couette flow instabilities from purely inertial to purely elastic one.

The problem of the vortex formation was firstly investigated in papers [208–211] theoretically as well as experimentally (see also reviews [23,212]). It was shown that a regular hydrodynamic structure can be observed and it happens at the Taylor numbers, which were several orders less than the above-mentioned critical Ta* value. It means that this effect has nothing in common with inertial mechanism, but is governed by the elasticity of a fluid. Then the critical conditions are determined by the Deborah number, De, which is the ratio of

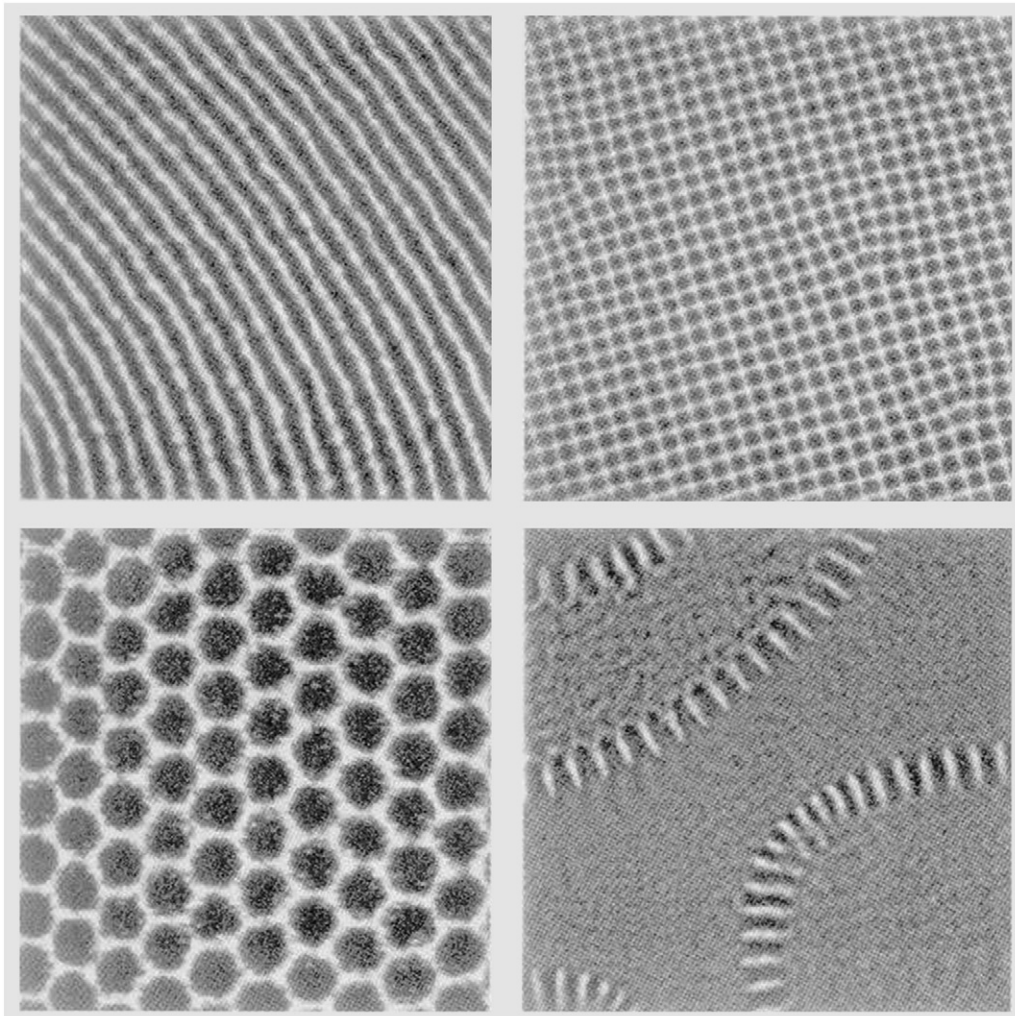

Fig. 15. 2D patterns of self-organization in vibrations of dispersion of micro-size spherical particles with different frequencies (adopted from [121]).

characteristic internal (relaxation) and external (rate of deformation) times. The Deborah number was determined as

$$De = \frac{2\Omega_1\lambda(1+\varepsilon)^2}{(1+\varepsilon)^2-1} \tag{6}$$

where Ω_1 is the frequency of rotation of an inner cylinder ($\Omega_2 = 0$) in the Couette apparatus, ε is the dimensional gap defined as

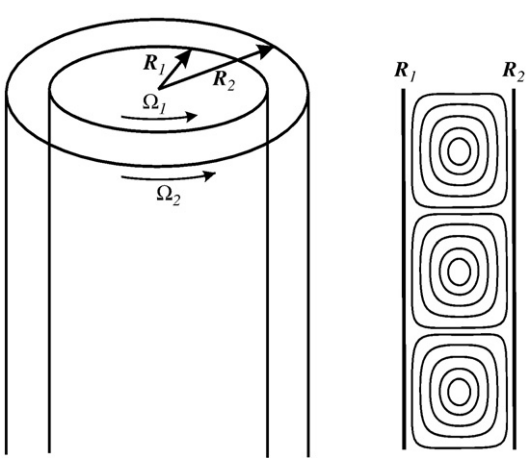

Fig. 16. Taylor–Couette instability — formation of cells.

$\varepsilon = (R_2 - R_1)/R_1$ (definitions of R_1 and R_2 see Fig. 16), and λ is the relaxation time.

The Reynolds number in all cases was less than 7 10^{-3}; this was four orders of magnitude less than the critical value corresponding to the onset of the centrifugal instability. It was found that there is a critical Deborah number equal to 35.5 responsible for the onset of instability. The latter was demonstrated by the regular periodic variations of the axial velocity. Flow visualization for elastic fluids also clearly demonstrated the onset of secondary flows [213,214]. So, the existence of viscoelastic Taylor–Couette instability has been proven, and the onset of this phenomenon is determined by the critical Deborah number, De_{cr} (or, equivalently, the critical Weissenberg number, Wi_{cr}).

According to [23], the following relationship takes place:

$$Wi_{cr} = 5.9\varepsilon^{1/2}. \tag{7}$$

Elastic instability can occur in different geometries of flow. Different forms of elasticity-obliged instabilities and regular structure formation were described in the first section of this Review. In addition, elastic instability in polymer solutions was investigated in cross-channel flow [215], which can result in steady asymmetric state when flowing on perfectly symmetric geometry [216].

The analysis of the cell formation in elastic fluids is ordinary limited by not very high Weissenberg numbers. Meanwhile one can expect that cells can duplicate in increasing Wi as occurs, for example,

in the process of duplicating cells in the Rayleigh–Bénard instability, that finally leads to the formation of Feigenbaum fractal chaotic structures [217]. Indeed fractal approach was successfully applied for the analysis of the shark-skin effect [218]. Such chaotic structures were really observed in strong capillary flows [219].

5.3. Vorticity in micellar colloid solutions

Vorticity is one of the forms of structure formation in flow of rod-like colloid systems, which is usually treated as a banding of some kind. In the latest review it was said that "vorticity–banding instability … is probable related to an elastic instability" and "is *not* related to a Taylor–Couette (i.e. inertial) instability" [16], though the term "Taylor cells" is commonly used for the quantitative description of these structures.

The secondary flows ("banding") leading to the cell structure in the Couette flow were described for colloids of different types (not obligatory rod-like colloids) in several publications [220–226] and also for colloidal star glasses which can be treated as the intermediate case between polymers and colloids [227].

It was stated that "the origin of the vorticity–banding is less well understood as compared to…" usual banding (see below) in the Couette flow [16]. Meanwhile, several authors directly relate this effect to the inhomogeneity of normal stresses along the direction of the velocity gradient [224]. The origin of normal stress difference was explained as a two-step act: initial formation of band structure in a micellar system with consequent appearance of normal stress at the interface [226]. So, it is reasonable to think that the vorticity structure in the Couette flow of micellar colloid systems has the same nature as the Taylor-like cell structure observed in polymeric fluids. The general cause for both is the elasticity of a fluid generated from either deformation of polymer chains of elastic reply of micelles to loading.

6. Banding

The phenomenon of banding usually is discussed for the Couette flow. It manifests itself as the formation of a two-component structure along the direction of the gradient of velocity (that is why this phenomenon is sometimes called *the gradient banding*) [228], or along the radius in the gap between two coaxial cylinders. It looks like as a two-phase system as schematically shown in Fig. 17. Actually, the number of layers can be more than two, and a different character of banding depends on shear rate, which determines the physical effects leading to instability [229].

Two-component flow can also be observed in other geometries of flow. For example, it exists in the flow of a visco-plastic medium when stresses acting in one part of the volume are less than the yield stress threshold and exceed this limit in the other part of a material, as shown in the flow through a capillary in Fig. 18. The velocity distribution (*abba*) is also shown in this figure.

The difference of the structures in the central zone and the near-wall zone is quite evident: below the yield stress (a flat velocity profile) we are dealing with undestroyed structure of a matter (central zone), while high stresses in the near-wall zone break this initial static structure. To be more exact, one can say that any stress state in a non-Newtonian flow corresponds to different structures of a fluid, but in the cases under consideration we discuss step-wise changes induced by deformation, such as yielding of phase transitions. A multi-zone flow can exist in any geometry depending on the stress distributions in this particular situation.

The phenomenon of gradient banding is the most widely met and studied for wormlike micellar (colloid) systems [137,147,230–240], which are rheologically (and structurally too) similar to polymer solutions. Moreover, micelles can be formed by polymeric substances, e.g. block copolymers [241,242]. During the last decade, the effect of banding was more than once also observed in polymer solutions and melts [69,243–249]. It seems important that a possibility of banding can be realized for systems (either micellar or polymeric) only if there are enough entanglements between primary structure elements [246,248]. It was also suggested that the banding is a phenomenon inherent in different soft matters at deformations with constant shear stress and directly related to yielding [250].

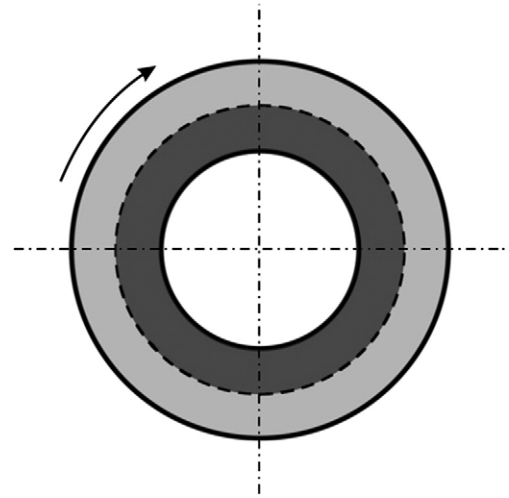

Fig. 17. Banding in the Couette flow.

Different methods were used to follow the velocity distribution in a fluid. The results of various versions of electromagnetic field methods were documented in numerous publications devoted to micellar as well as to polymeric systems. Among them, the particle tracking velocimetric technique gives quite clear and expressive results [29,62,234,238,244–255]. The picture obtained in banded structure looks as shown in Fig. 19 where velocity profiles between moving (upper) and stationary (lower) surfaces in a plate–plate or cone–plate apparatus are shown.

It is quite evident that "average" shear rate (which might be expected to be constant) disintegrates into two parts with their own real shear rates (slopes of lines), and this is the direct evidence of the two-layer structure of a stream.

It was proven that the composition or structure of both parts of bands is different. The following physical phenomena can be responsible for shear (gradient) banding:

- shear-induced phase separation [256] and formation of phases with different concentrations of the components (see, e.g. direct measurements in [257]); the shear thickening of the jamming type that leads to formation of the solid-like structure (see, e.g. [148]) also relates to the effects of this type (this effect is of general meaning for a great variety of different materials [258]); solid particle powders are also likely close to this type of rheological behavior [259]; and the difference in shear stress through the

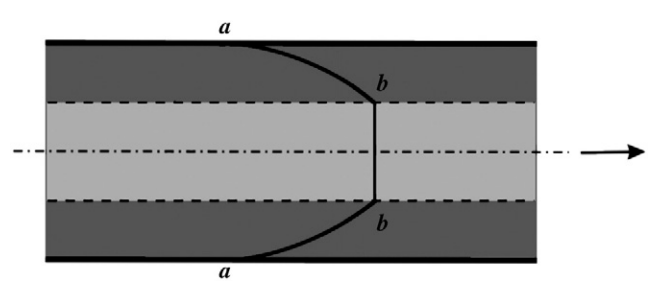

Fig. 18. Flow of a visco-plastic medium through a cylindrical channel. *ab* — near-wall zone of the flow of a destroyed structure; *bb* — central zone of solid-like undestroyed structure.

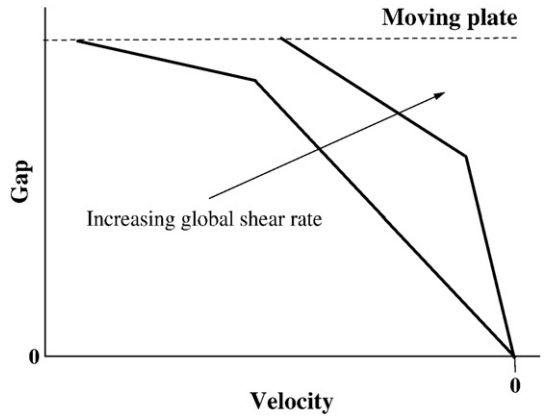

Fig. 19. Velocity profiles in a banded structure observed at different "average" shear rates (after [189]).

depth of a channel can lead to the stress-induced crystallization at some part of a matter that also results in layered structure of a stream [260];

- random-to-oriented state transition (including the formation of LC phase, e.g. an isotropic-to-nematic phase transition induced by deformation [261]); and
- wall effects; a model of near-wall aggregation, i.e. the formation of a solid-like layer with properties different from a flowing layer was proposed in [262].

These processes can proceed almost instantaneously or developing in time due to the kinetics of the transitions under discussion and/or elasticity of a system. Time effects can result in slow structure transformations, so not only the spatial but also temporal oscillations (see Fig. 10) can be resolved [124,148,151,236].

Time effects can be expected in two cases. Firstly, it can be observed for fluids, the stable state rheology of which is described by the two-valued flow curve as in Fig. 7. Such flow curve can be presented as the double-valued dependence of shear stress versus shear rate (Fig. 20). Two different stresses (τ_1 and τ_2) can exist at any constant shear rate in the range between shear rates *a* and *b* and the part of a curve *mn* is treated as the zone of instability. If the stress but not shear rate is given only a single value of shear rate exists in this zone. It is possible to treat this flow curve as representing two states of a medium — the first in the domain 0*m* and the second in the domain *nF*, though the physical nature of this effect can be different. Such type of the rheological behavior has been really observed for different materials, e.g. consistent greases as a disperse visco-plastic medium [263], polymer blends at conditions of circle morphology formation [183,184], etc.

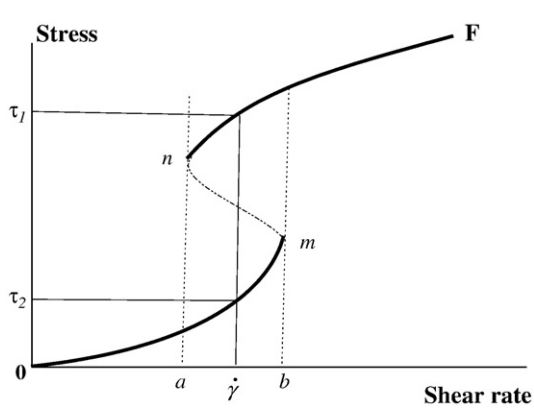

Fig. 20. Double-valued flow curve.

Secondly, double-valued stress can be a function of deformation measured at constant shear rate. Fig. 21 demonstrates this kind of "overshoot" behavior. Again the state of medium can be treated as different — before the maximum stress and beyond this maximum at higher deformations (strains). In this sense, the maximum stress τ^* can be treated as the "strength" of the structure sustaining this stress.

This type of the transient behavior was observed for many different materials, including disperse systems, polymer solutions and melts. It is worth mentioning that the overshoot effect is related to the thixotropic behavior of a complex fluid and characteristic times of the structure restoration can be large [264,265] that leads to the rather slow structure evolution.

The final remark on the time effects touches a possible artifact related to the deformation of a torsion bar (dynamometer) used for measurements of torque (shear stresses): oscillations can be observed in such a complex system if a torsion bar (or wire) is insufficiently rigid [266].

However, in all cases listed above, the separation into two states of a matter is assumed (and experimentally proven) as the basic mechanism of banding and these states are characterized by different physical (optical) and rheological properties. It is worth adding that elasticity of a fluid can promote transition as consequently banding formation.

7. Conclusion

The analysis of numerous experimental observations demonstrating the formation of self-organized structures in shearing shows that this phenomenon is the result of flow instabilities, which are common for many soft matters or "complex fluids" such as colloids of different types, emulsions, gels, polymer solutions and melts, dense suspensions and even granular media. The following principal characteristics of all these systems can be understood as the general mechanism of ordering. These are elasticity of a fluid and a possibility of its existence in different states; the latter can be different relaxation or phase states or even spatial/temporal domains with a different density. Elasticity of a fluid is the most important provoking factor for transitions between different types of rheological behavior, e.g. the fluid-to-rubbery-like behavior at high deformation rates and the transition from the real laminar flow to wall slip.

The manifestation of self-organized structures depends on the conditions of flow. In capillary flow of elastic polymer liquids regular surface structure appears that can be related as the consequence of the wall slip and ruptures of rubber-like medium. Yielding and related time effects as well as jamming effects in condensed matters including colloidal gels (and even granular matters) are connected with the structure formation and destroying.

Two principal modes of instability in complex fluids should be distinguished. The first one is formation of secondary flows at high Weissenberg numbers in homogeneous elastic fluid. Vorticity in the

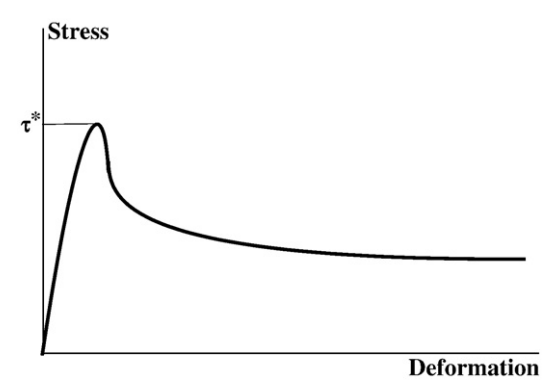

Fig. 21. Transient stress evolution at constant shear rate.

Couette flow (analogous but not equivalent to the Couette–Taylor cells) is the consequence of elastic instability. Such structures can duplicate and finally transform to chaotic movement. The second one is the separation of a complex fluid into components ("phases") with different properties and different behaviors in shearing, the latter promotes self-assembling. The effect of shear banding is due to shear-induced separation of a material into different structure forms with its own properties, and one of the dominating (but not a single) causes of this effect is also the elasticity of a complex media, though this is more general phenomenon than elasticity which can exist or not in these complex fluids.

Similarity between the rheology of elastic micellar colloids and polymeric liquids is rather evident and leads to many analogous features of their flow properties, such as the existence of the limiting Newtonian viscosity, the domain of non-Newtonian flow, the storage of elastic energy in flow and the appearance of instabilities of different types (though not all different structure forms have been equally described for both systems). Meanwhile systems with structure-forming dispersed elements, such as colloid suspensions, polymers with solid filler, granular matters and concentrated emulsions may not demonstrate rubbery elasticity but can form cluster structures manifesting themselves as the yielding in the low stress domain and as the jamming at high shear rates. Deformation of these matters leads to structure rearrangement and possible separation to species with different structure (properties). Elasticity of these materials favors structure formations.

Elasticity of a flowing medium at high Weissenberg numbers dominates over irreversible deformations of flow. Then it might be necessary to treat the behavior of such medium not as a "liquid" but as a rubbery-like material. It leads to the refusal of treating it as a continuum but to discussing its behavior as an analogue of a granular system.

Acknowledgments

The authors are grateful to the Section on Chemistry and New Materials of the Russian Academy of Sciences for the 2010 financial support.

References

[1] Ashby WR. J General Psychology 1947;37:125.
[2] Prigogine I, Structure, Dissipation and Life. Theoretical Physics and Biology, Versailles, 1967, North-Holland Publ Company, Amsterdam, 1969.
[3] Larson LG. Rheol Acta 1992;31:497.
[4] Malkin. AYa,, Kulichikhin SG. J Polymer Sci, Ser B 1996;38:104.
[5] Janeschitz-Kriegl H, Ratajski E, Stadbauer M. Rheol Acta 2003;42:355.
[6] Acierno S, Palomba B, Winter HH, Grizzuti N. Rheol Acta 2003;42:242.
[7] Devaux N, Monasse B, Haudin J-M, Moldenaers P. Vermant J Rheol Acta 2004;43:210.
[8] Hadinata Ch, Fabriel C, Ruellmann M, Kao N, Laun HM. Rheol Acta 2006;45:539.
[9] Hadinata Ch, Boos D, Gabriel C, Wassner E, Rüllmann M, Kao N, Laun M. J Rheol 2007;51:195.
[10] Acierno S, Coppola S, Grizzuti N. J Rheol 2008;52:551.
[11] Scelsi L, Mackley MR. Rheol Acta 2008;47:895.
[12] Scelsi L, Mackley MR, Klein H, Olmsted PD, Graham RS, Harlen OG, McLeish TCB. J Rheol 2009;53:859.
[13] Bécu L, Grondin P, Colin A, Manneville S. Colloids and Surfaces A: Physicochem & Engng Aspects 1984;263:146.
[14] Vermont J, Solomon MJ. J Phys: Condens Matter 2005;17:R187.
[15] Callaghan PT. Rheol Acta 2008;47:243.
[16] Dhont JG, Briels WJ. Rheol Acta 2008;47:257.
[17] Olmsted PD. Rheol Acta 2008;47:283.
[18] Manneville S. Rheol Acta 2008;47:301.
[19] Lerouge, S, Berret J-F. arXiv:0910.1854v1 [cond-mat.soft] 9 Oct 2009.
[20] Overlez G, Rodts S, Cahteau X, Coussout P. Rheol Acta 2009;48:831.
[21] Denn MM. Ann Rev Fluid Mech 1990;22:13.
[22] Denn MM. Ann Rev Fluid Mech 2001;33:265.
[23] Larson RG. Rheol Acta 1992;31:213.
[24] Malkin AYa. Polymer Sci Ser C 2006;48:21.
[25] Rutgers R, Mackley M. J Rheol 2000;44:1319.
[26] Miller E, Rothstein JP. Rheol Acta 2004;44:160.
[27] Allal A, Laverhne A, Vergnes B, Marin G. J Non-Newton Fluid Mech 2006;134:127.
[28] Kulikov O, Hornung K, Wagner M. Rheol Acta 2007;46:741.
[29] Rodriguez-Gonzáles F, Pérez-González J, Marin-Sántibáñez BM, de Vargas L. Chem Engng Sci 2009;64:4675.
[30] Rodriguez-Gonzáles F, Pérez-González J, de Vargas L, Marin-Sántibáñez BM. Rheol Acta 2010;49:145.
[31] Kay D, Carreau PJ, Lafleur PG, Roberts L, Vergnes B. Polymer Engng Sci 2003;43:78.
[32] Pérez-González J. J Rheol 2005;49:571.
[33] Wang Sh-Q, Plucktaveesak N. J Rheol 1999;43:453.
[34] El Kissi N, Piau J-M, Toussaint F. J Non-Newton Fluid Mech 1997;68:271.
[35] Vinogradov GV, AYa Malkin, YuG Yanovskii, Borisenkova EK, Yarlykov BV, Berezhnaya GV. J Polymer Sci Part A-2 1972;10:1061.
[36] Vinogradov GV, AYa Malkin, YuG Yanovskii, Borisenkova EK, Yarlykov BV, Berezhnaya GV, Shatalov VP, Shalganova VG, YuP Yudin. Polymers — in RussianVysokomolek Soedin 1972;14A:2435.
[37] Vinogradov GV, AYa Malkin, Blinova NK, Sergeyenkov SI, Zubugina MP, Titkova LV, YuG Yanovsky, Shalganova VG. Europ Polymer J 1973;9:1231.
[38] Vinogradov GV. Pure & Appl Chem 1974;39:115.
[39] Vinogradov GV, AYa Malkin, Volosevitch VV. Appl Polymer Sympos 1975;No 27:47.
[40] Hatzikirikos SG, Dealy JM. J Rheol 1992;36:845.
[41] Hatzikirikos SG, Dealy JM. Intern Polymer Proc 1993;8:36.
[42] Misuolis E, Kazatchkov IB, Hatzikirikos SG. Rheol Acta 2005;44:418.
[43] Ferri D, Canetti M. J Rheol 2006;50:611.
[44] Park HE, Lim ST, Smillo F, Dealy JM, Robertson ChG. J Rheol 2008;52:1201.
[45] Rodriguez-Gonzáles F, Pérez-González J, de Vargas L, Marin-Sántibáñez BM. Rheol Acta 2010;49:145.
[46] Winter HH. Rheol Acta 2009;48:241.
[47] AYa Malkin, Blinova NP, Vinogradov GV, Zabugina MP, OYu Sabsai, Shalganova VG, IYu Korchevskaya, Shatalov VP. Europ Polymer J 1974;10:445.
[48] AYa Malkin, Teishev AE. Polymer Engng Sci 1991;31:1590.
[49] Vinogradov GV, AYa Malkin, Volosevitch VV, Shatalov VP, Yudin VP. J Polymer Sci: Polymer Phys Ed 1975;13:1721.
[50] AYa Malkin, Petrie CJS. J Rheol 1997;41:1.
[51] Cogswell FN. J Non-Newton Fluid Mech 1977;2:37.
[52] Arda DR, Mackley MR. J Non-Newton Fluid Mech 2005;126:47.
[53] Leonov AI. Wear 1990;141:137.
[54] Gerrard DP, Padovan J. Rubber Chem Techn 2001;76:29.
[55] Xu F, Denn MM, Schreiber JD. J Rheol 2007;51:451.
[56] Palza H, Naue IFC, Wilheim M. Macromolecules. Rapid Comm 2009;30:1799.
[57] Lupton JM. J Regester W Polym Eng Sci 1965;5:235.
[58] Mayerholtz RW. J Appl Polymer Sci 1967;11:687.
[59] Karakhin AV, Leonov AI. Zh Prikl Mech i Techn Fiz — in Russian J Appl Mech and Techn Phys 1968; 3:110.
[60] Molenaar J, Koopmans RJ. J Rheol 1994;38:99.
[61] Durand V, Vergnes B, Agassant JF, Benout E, Koopmans RJ. J Rheol 1996;40:383.
[62] Münstedt H, Schmidt M, Wassner E. J Rheol 2000;44:413.
[63] den Doelder CFJ, Koopmans RJ, Molenaar J. J Non-Newton Fluid Mech 1998;79:503.
[64] Taliadorou E, Georgiou GG, Alexandrou AN. J Non-Newton Fluid Mech 2007;146:30.
[65] Rofe CJ, de Vargas L, Pérez-González J, Lambert RK, Callaghan PT. J Rheol 1996;40:1115.
[66] Méndez-Sánchez AF, Pérez-González J, de Vargas L, Casterjón-Pita RF, Casterjón-Pita AA, Huelsz G. J Rheol 2003;47:1455.
[67] Marin-Santibáñez BM, Pérez-González J, de Vargas L, Rodriguez-Gonzáles F, Huelsz G. Langmuir 2006;22:4015.
[68] Yang X, Wang S-Q, Halasa A, Ishida H. Rheol Acta 1998;35:15.
[69] Tapadia P, Wang S-Q. Phys Rev Lett 2003;91:198301.
[70] Tapadia P, Wang S-Q. Macromolecules 2004;37:9083.
[71] Tapadia P, Wang S-Q. Phys Rev Lett 2006;96:016001.
[72] Wang S-Q, Ravindranath Sh, Wang Y, Boukany P. J Chem Phys 2007;128:064903.
[73] Mooney M. J Rheol 1931;2:210.
[74] Hatzikirikos SG, Dealy JM. J Rheol 1992;36:703.
[75] Vinogradov GV, Dreval VE, Protasov VP. Proc Roy Soc Lnd A 1987;409:249.
[76] Pérez-González J. J Rheol 2005;49:571.
[77] Rodriguez-Gonzáles F, Pérez-González J, de Vargas L, Moreno E, Gonzáles-Santos G. Polymer Engng Sci 2008;48:386.
[78] Schuberth S, Münstedt H. Rheol Acta 2008;47:111.
[79] Reimers MJ, Dealy JD. J Rheol 1998;42:527.
[80] Koran F, Dealy JD. J Rheol 1999;43:1291.
[81] Kazatchkov IB, Hatzikirikos SG. Rheol Acta 2010;49:267.
[82] Tapadia P, Ravindranath Sh, Wang S-Q. Phys Rev Lett 2006;96:196001.
[83] Ravindranath Sh, Wang S-Q. J Rheol 2008;52:342.
[84] Raynaud JS, Moucheront P, Bodz JC, Bertrand F, Guilbaud JP, Cossot P. J Rheol 2002;46:709.
[85] Salmon J-B, Bécu L, Manneville S, Colin A. Europ Phys J E 2003;10:209.
[86] Perrin P. Langmuir 2000;16:881.
[87] Sessoms DA, Bishofberger I, Cipelletti L, Trappe V. Phil Trans R Soc A 2009;367:5013.
[88] Mason TG, Bibette J, Weitz DA. J Coll Interface Sci 1996;179:439.
[89] Pal R. Food Hydrocolloids 2006;20:997.
[90] Masalova I, Taylor M, Kharatiyan E, Malkin AYa. J Rheol 2005;49:839.
[91] Masalova I, Malkin AYa. Colloid J 2007;69:185.
[92] Derkach SR. Adv Colloid Interface Sci 2009;151:1.
[93] Zank J, Reynolds PA, Jackson AJ, Baranyai KJ, Perriman AW, Barker JG, Kim M-H, White JW. Physica B 2006;385–386:776.

[94] Barnes HA, Walters K. Rheol Acta 1985;24:323.
[95] Barnes HA. Appl Rheol 2007;17:43110.
[96] AYa Malkin, OYu Sabsai, Verebskaya EL, Zolotarev VA, Vinogradov GV. Kolloid Zh — in RussianColloid J 1976;38:181.
[97] Uhlherret PHT, Guo J, Tiu C, Zhang XM, Zhou JZ-Q, Fang T-N. J Non-Newton Fluid Mech 2005;125:101.
[98] Caton F, Baravian Ch. Rheol Acta 2008;47:601.
[99] Mujumdar A, Beris AN, Metzner AB. J Non-Newton Fluid Mech 2002;102:157.
[100] Moller PCF, Mewis J, Bonn D. Soft Matter 2006;2:274.
[101] Moller P, Fall A, Chikkad V, Derks D, Bonn D. Phil Trans Royal Soc A 2009;367:5139.
[102] Moller P, Fall A, Bonn D. Europhys Lett 2009;87:38004.
[103] Christopoulou C, Petekidis G, Erwin B, Cloitre M, Vlassopoulos D. Phil Trans R Soc A 2009;367:5051.
[104] Mewis J, Wagner NJ. Adv Coll Interface Sci 2009;147–148:214.
[105] Coussot P, Nguyen QD, Huynh HT, Bonn D. J Rheol 2002;46:573.
[106] Wakou J, Brito R, Ernst MH. arXiv: cond-matter/0103085v1/[cond-matter. stat-mech] 4 Mar 2001.
[107] Varadan P, Solomon MJ. Langmuir 2003;19:509.
[108] Dibbe CJ, Kogan M, Solomon MJ. Phys Rev E 2003;74:041403.
[109] Ramakrishnan S, Gopalakrishnan V, Zukovski CF. Langmuir 2005;21:9917.
[110] Ramakrishnan S, Zukovski CF. Langmuir 2006;22:7833.
[111] Gopalakrishnan V, Zukovski CF. Phys Rev E 2007;75:021406.
[112] Lee MH, Furst EM. Phys Rev E 2008;77:041408.
[113] Masschaele K, Fransaer J, Vermant V. J Rheol 2009;53:1437.
[114] Kogan M, Solomon MJ. Langmuir 2010;26:1207.
[115] Peterlin A, Turner DT. Nature 1963;197:488.
[116] Matsuo T, Pavan A, Peterlin A, Turner DT. J Colloid Interface Sci 1967;24:241.
[117] Bianchi U, Peterlin A. Colloid & Polymer Sci 1967;232:749.
[118] Hoffman RI. J Rheol 1972;16:155.
[119] Kundu S, Grekov D, Ogale AA, Ray AD. J Rheol 2009;53:85.
[120] Kulkarni SD, Morris JF. J Rheol 2009;5:417.
[121] Jaeger HM, Nagel SM, Behringer RP. Phys Today 1996;49:32.
[122] Franks GV, Zhou Zh, Duin NJ. J Rheol 2000;44:759.
[123] O'Brien VT, Mackley ME. J Rheol 2002;46:557.
[124] Lee YS, Wagner NJ. Rheol Acta 2003;42:199.
[125] Fischer P, Rehage H. Rheol Acta 1997;36:13.
[126] Hu YT, Boltenhagen P, Matthys E, Pine DJ. Eur Phys Lett 1997;38:389.
[127] Hu YT, Boltenhagen P, Pine DJ. J Rheol 1998;42:1209.
[128] Hu YT, Boltenhagen P, Matthys E, Pine DJ. J Rheol 1998;42:1185.
[129] Decruppe JP, Ponton A. Eur Phys J E 2003;10:201.
[130] Fall A, Huang N, Bertrand F, Ovarlez G, Bonn D. Phys Rev Lett 2008;100:018301.
[131] Haw MD. Phys Rev Lett 2004;92:185506.
[132] Haw MD. Soft Matter 2006;2:950.
[133] Haw MD. Phil Trans R Soc A 2009;367:5167.
[134] Keys AS, Abate AR, Glotzer SC, Durian DJ. Nat Phys 2007;3:260.
[135] Gardel E, Seitaridou E, Facto K, Keene E, Hattam K, Easwar N, Menon N. Phil Trans R Soc A 2009;367:5109.
[136] Hoffman RI. J Rheol 1998;42:111.
[137] Berret J-F, Porte G, Decruppe J-P. Phys Rev E 1997;55:1668.
[138] Cappelaere E, Berret J-F, Decruppe J-P, Cressely R, Lindner P. Phys Rev E 1997;56:1869.
[139] Candau SJ, Hirsch E, Zana R. J Colloid Interface Sci 1985;105:521.
[140] Candau SJ, Hirsch E, Zana R, Adam M. J Colloid Interface Sci 1988;122:430.
[141] Cates ME. J Phys Chem 1990;94:371.
[142] Ferry JD. Viscoelastic properties of polymers. 3rd Ed. Wiley; 1980.
[143] Shikata T, Hirata H, Takatori E, Osaki K. J Non-Newton Fluid Mech 1988;28:171.
[144] Cates ME, Candau SJ. J Phys Cond Matt 1990;2:6869.
[145] Kern F, Zana R, Candau SJ. Langmuir 1991;7:1344.
[146] Khatory A, Lequeux F, Kern F, Candau SJ. Langmuir 1993;9:1456.
[147] Berret J-F, Appell J, Porte G. Langmuir 1993;9:2851.
[148] Herle H, Fischer P, Windhab EJ. Langmuir 2005;21:9051.
[149] Wunenburger AS, Colin A, Leng J, Arnéodo A, Roux D. Phys Rev Lett 2001;86:1374.
[150] Bagusat F, Böhme B, Schiller P, Mögel H-J. Rheol Acta 2005;44:313.
[151] Camerel F, Gabriel JCP, Batail P, Panine P, Davidson P. Langmuir 2003;19:10028.
[152] Lootens D, van Damme H, Hébraud P. Phys Rev Lett 2003;90:178301.
[153] Lerouge S, Pardin MA, Argentina M, Grégoire G, Cardoso O. Soft Matter 2008;4:1806.
[154] Marin-Sántibáñez BM, Pérez-González J, de Vargas L. Rheol Acta 2010;49:177.
[155] Vermant J, Cassia S, Dolgovsij MK, Maffettone PL, Macosko CW. J Rheol 2007;51:429.
[156] Fan Z, Advani SG. J Rheol 2007;51:585.
[157] Anderson BJ, Zukoski CF. ASAPLangmuir 2010, doi:10.1021/la9044573.
[158] Egres RG, Wagner NJ. J Rheol 2005;49:719.
[159] Egres RG, Nettesheim F, Wagner NJ. J Rheol 2006;50:685.
[160] Mock EB, Zukoski CF. J Rheol 2007;51:541.
[161] Giesekus H. Rheol Acta 1969;8:411.
[162] Giesekus H. Z Angew Mat Mech 1978;58:T26.
[163] Michele J, Pätzold R, Donis R. Rheol Acta 1977;16:317.
[164] Petit L, Noetinger B. Rheol Acta 1988;27:437.
[165] Jefri MA, Zahed AH. J Rheol 1989;33:691.
[166] Lyon MR, Mead DW, Elliot RE, Leal LG. J Rheol 2001;45:881.
[167] Feng J, Joseph DD. J Fluid Mech 1996;324:199.
[168] Kim SK, Han MS, Kim C. Rheol Acta 2000;39:495.
[169] Won D, Kim C. J Non-Newton Fluid Mech 2004;117:141.
[170] Chen LB, Chow MK, Ackerson BJ, Zukoski CF. Langmuir 1994;10:2817.
[171] Chen LB, Ackerson BJ, Zukoski CF. J Rheol 1994;38:193.
[172] Poulin Ph, Stark H, Lubensky TC, Weitz DA. Science 1997;275:1770.
[173] Phillips RJ, Talini L. J Non-Newton Fluid Mech 2007;147:175.
[174] Scirocco R, Vermant J, Mewis J. J Non-Newton Fluid Mech 2004;117:183.
[175] Almdal K, Rosedale JH, Bates FS. Macromolecules 1990;23:4336.
[176] Almdal K, Koppi KA, Bates FS, Mortensen K. Macromolecules 1992;25:1643.
[177] Winter HH, Scott DB, Gronski W, Okamoto S, Hashimoto T. Macromolecules 1993;26:7236.
[178] Watanabe H, Kanaya T, Takahashi Y. Macromolecules 2001;34:662.
[179] Mortensen K, Theunissen E, Kleppinger R, Almdal K, Reyanaers H. Macromolecules 2002;35:7773.
[180] Castelletto V, Hamley IW, Yuan X-F, Kalerakis A, Booth C. Soft Matter 2005;1:138.
[181] Mandare P, Winter HH. Rheol Acta 2007;46:1161.
[182] Sänger J, Gronski W, Leist H, Wiesner U. Macromolecules 1997;30:7621.
[183] Kulichikhin VG, Plotnikova EP, Tereshin AL, Subbotin AV, Tsamalashvili LA. Polymer Sci Ser C 2000;42:129.
[184] Kulichikhin V, Plotnikova E, Subbotin A, Platé N. Rheol Acta 2001;40:49.
[185] Kulichikhin VG, Semakov AV, Karbushev VV, Platé NA, Picken SJ. Polymer Sci A 2009;51:1303.
[186] McKinley GH, Byars JA, Brown RA, Armstrong RC. J Non-Newton Fluid Mech 1991;40:201.
[187] Schouveiler L, de gal P, Chauve M-P. Exp Fluids 1999;26:179.
[188] Kulichikhin VG, Tsimalashvili LA, Plotnikova EP, Barannikov AA, Kerber ML, Fischer H. Polymer Sci A 2003;45:944.
[189] Majmudar TS, Behringer RP. Nature 2005;435:1079.
[190] Bi D, Chakraborty B. Phil Trans R Soc A 2009;367:5073.
[191] Pouliquen O, Forterre Y. Phil Trans R Soc A 2009;367:5091.
[192] Henkes S, O'Hern CS, Chakraborty B. Phys Rev Lett 2007;99:038002.
[193] Henkes S, Chakraborty B. Phys Rev E 2009;79:061301.
[194] Forterre Y, Pouliquen O. Ann Rev Fluid Mech 2008;40:1.
[195] Jop P. Y. Forterre Y, Pouliquen O. Nature 2006;441:727.
[196] Majda AJ, Bertozzi AL. Cambridge Texts in Applied Mathematics(No. 27),Cambridge University Press; 2009.
[197] Donnely RJ, Fritz D. (London) AProc Roy Soc 1960;258:101.
[198] Chandrasekhar S. Hydrodynamic and hydromagnetic stability. Cambridge: Cambridge University Press; 1981.
[199] Rűdiger G, Schutz M, Shalybkov D. Phys Rev E 2003;67:046312.
[200] Rűdiger G, Shalybkov D. Phys Rev E, Phys Rev 2004;69:016303.
[201] Stefani F, Gundrum T, Rűdiger G, Schutz M, Szlkarski J, Hollerbach R. Phys Rev Lett 2006;97:184502.
[202] Hollerbach R. In: Wesseling P, Oñate E, Pěteau, editors. Europ Comf Comput Fluid Dynamics, ECCOMAS CFD 2006. The Netherlands: TU Delft; 2006.
[203] Al-Mubaiyedh UA, Sureshkumar R, Khomami B. J Fluid Mech 2002;462:111.
[204] Liu D, Choi S-H, Kim H-B. 10th Intern Conf on Fluid Control Measurements, and Visualization FLUCOME Aug 2009, Moscow Russia.
[205] Landry MP, Frigaard IA, Matrinez DM. J Fluid Mech 2006;560:321.
[206] Baier G. Graham MD Phys Fluids 1998;10:3045.
[207] Steinberg V, Groisman A. Phys Mag Part B 1998;78:2563.
[208] Muller SJ, Larson RG, Shaqfeh ESG. Rheol Acta 1989;28:499.
[209] Larson RG, Shaqfeh ESG, Muller SJ. J Fluid Mech 1990;218:573.
[210] Shaqfeh ESG, Muller SJ, Larson RG. J Fluid Mech 1992;235:285.
[211] Muller SJ, Shaqfeh ESG, Larson RG. J Non-Newton Fluid Mech 1993;46:315.
[212] Shaqfeh ESG. Ann Rev Fluid Mech 1996;28:129.
[213] Baumert BM, Muller SJ. Rheol Acta 1995;34:147.
[214] Baumert BM, Liepmann D, Muller SJ. J Non-Newton Fluid Mech 1997;59:221.
[215] Arratia PE, Thomas CC, Diorio J, Gollub JP. Phys Rev Lett 2006;96:144502.
[216] Poole RJ, Alves MA, Oliveira PJ. Phys Rev, Lett 2007;99:164503.
[217] Feigenbaum MJ. J Stat Phys 1978;19:25.
[218] Tzoganakis C, Price BC, Hatzikiriakos SG. J Rheol 1993;37:355.
[219] Vinogradov GV. Rheol Acta 1973;12:357.
[220] Chen LB, Zukoski CF, Ackerson DJ, Hanley YJM, Straty GC, Barker J, Glinka CJ. Phys Rev Lett 1992;69:688.
[221] Bonn D, Meunier J, Greffier O, Al-Kahwaji A, Kellay H. Phys Rev E 1998;58:2115.
[222] Fischer P, Wheeler EK, Fuller GG. Rheol Acta 2002;41:35.
[223] Lin-Gibson S, Pathak JA, Grulke EA, Wang H, Hobbie EK. Phys Rev Lett 2004;92:048302.
[224] Watanabe R, Takayama T, Ogata S. J Visualization 2004;7:273.
[225] Kang K, Lettinga MP, Dogic Z, Dhont JKG. Phys Rev E 2006;74:026307.
[226] Wilkins GMB, Olmsted PD. Europ Phys J E 2006;21:133.
[227] Rigers SA, Callagham PT, Petekidis G, Vlassopoulos D. J Rheol 2010;54:133.
[228] Fielding SM. Phys Rev E 2007;76:016301.
[229] van der Gucht J, Lemmers M, Knobel W, Besseling NAM, Lettinga MP. Phys Rev Lett 2006;97:108301.
[230] Britten MM, Callaghan PT. Phys Rev Lett 1997;78:4930.
[231] Lerouge S, Decruppe JP, Humbert C. Phys Rev Lett 1998;81:5457.
[232] Britten MM, Callaghan PT. Europ Phys J B 1999;7:237.
[233] Britten MM, Mair RW, Lambert RK, Callaghan PT. J Rheol 1999;43:897.
[234] Fischer E, Callaghan PT. Phys Rev E 2001;64:011501.
[235] Salmon J-B, Manneville S, Colin A. Phys Rev E 2003;68:051503.
[236] Salmon J-B, Manneville S, Colin A. Phys Rev E 2003;68:051504.
[237] Liberato MW, Nettesheim F, Wagner NJ. Phys Rev E 2006;73:020504.
[238] Miller W, Rothstein JP. J Non-Newton Fluid Mech 2007;143:22.
[239] Raudsepp A, Callaghan P, Hemar Y. J Rheol 2008;52:1113.
[240] Helgeson ME, Vasquez PA, Kaler EW, Wagner NJ. J Rheol 2009;53:727.
[241] Castelletto V, Parras P, Hamley IW, Bäverbäck P, Padersen JS, Panine P. Langmuir 2007;23:6896.

[242] Dankova AG, Mendes E, Coppens M-O. J Rheol 2009;53:1087.
[243] Callaghan PT, Gil AM. Macromolecules 2000;33:4116.
[244] Tapadia P, Ravindranath Sh, Wang Sh-Q. Phys Rev Lett 2006;96:19601.
[245] Boukany PE, Hu YTh, Wang Sh-Q. Macromolecules 2008;41:2644.
[246] Ravindranath S, Wang Sh-Q, Olechnowicz M, Quirk RP. Macromolecules 2008;41: 2663.
[247] Wang Sh-Q. J Polymer Sci: Part B: Polymer Phys 2008;46:2660.
[248] Boukany PE, Wang Sh-Q. J Rheol 2009;53:73.
[249] Li X, Wang Sh-Q, Wang X. J Rheol 2009;53:1255.
[250] Møller PCF, Rodts S, Michels MAJ, Bonn D. Phys Rev E 2008;77:041507.
[251] Hu YT, Lips A. J Rheol 2005;49:1001.
[252] Hu YT, Palla C, Lips A. J Rheol 2008;52:379.
[253] Delgado J, Kriegs H, Castillo R. J Phys Chem B 2009;13:15485.
[254] Nigen S, El Kissi N, Piau J-M, Sadun S. J Non-Newton Fluid Mech 2003;112:177.
[255] Robert L, Dimay Y, Vergnes DB. Rheol Acta 2004;43:89.
[256] Tromp RH, de Hoog ENA. Phys Rev E 2008;77:031503.
[257] Holmes WM, Callaghan PT, Vlassopoulos D, Roovers J. J Rheol 2004;98:1085.
[258] Wagner NJ, Brady JF. Phys Today 2009;62:27.
[259] Marchal Ph, Smirani N, Choplin L. J Rheol 2009;53:1.
[260] Fernandez-Ballester L, Thurman DW, Kornfield JA. J Rheol 2009;53:1229.
[261] Helgeson ME, Reichert MD, Hu YT, Wagner NJ. Soft Matters 2009;5:3858.
[262] Ajdari A. Phys Rev E 1998;58:6294.
[263] Pawlow WP, Winogradow GW, Sinizyn WW, Deinega YF. Rheol Acta 1961;1:470.
[264] Vinogradov GV, AYa Malkin, Plotnikova EP, Kargin VA. in RussianReports of the Academy of Sciences of the USSR 1964;154:1421.
[265] AYa Malkin, Isayev A. Rheology: conceptions, methods, applications. Toronto, Canada: ChemTec Publ; 2005. Figs 3.43, 3.44.
[266] Leonov AI, Malkin AYa, Vinogradov GV. *Kolloid. Zh.* (in Russian) 1964;26: 335.