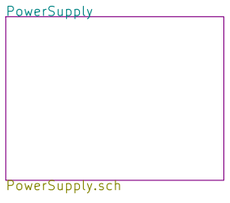

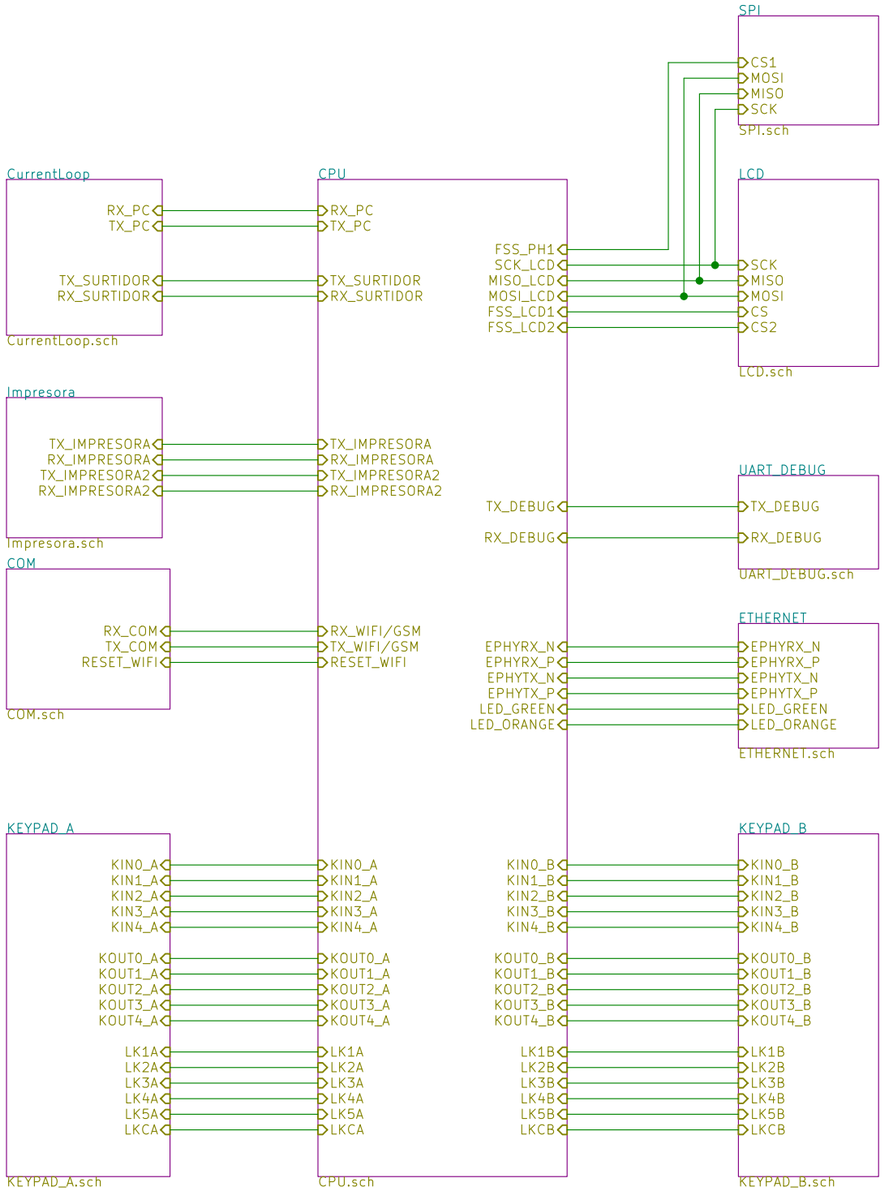

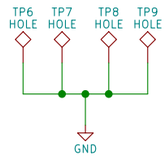

grupo empresarial INSEPET

Sheet: /
File: GRP.sch

Title: MODULO CONTROLADOR GRP

Size: A3	Date: 2017-03-04	**Rev: C**
KiCad E.D.A. kicad 4.0.6-e0-6349~53ubuntu16.04.1		Id: 1/12

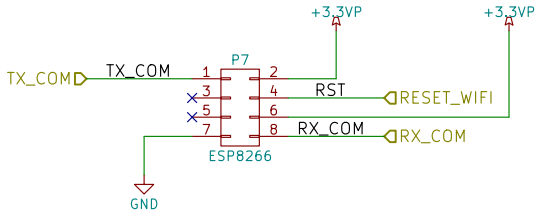

Sheet: /COM/ File: COM.sch		
Title: COMM PORT		
Size: A4	Date: 2017-03-04	**Rev: B**
KiCad E.D.A. kicad 4.0.6-e0-634953ubuntu16.04.1		Id: 2/12

LED

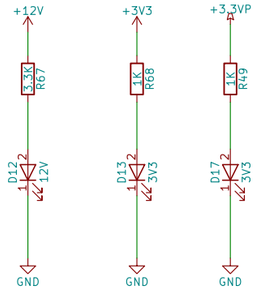

INPUT MAX 17VDC

REF FUSE: 0453003.MR

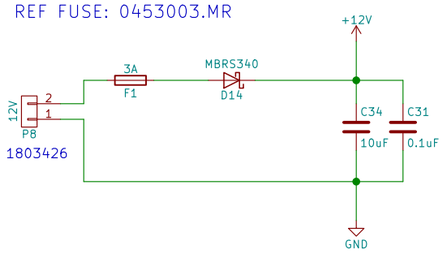

TESTPOINT

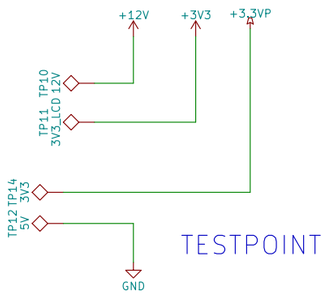

3V3 @2A LCD

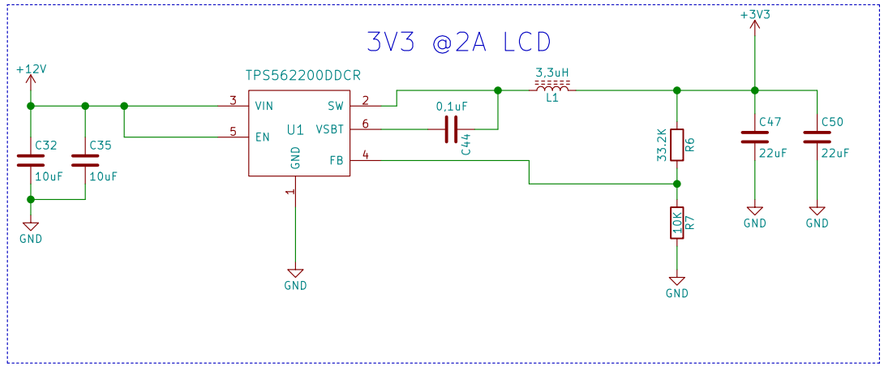

3V3 @2A Logic

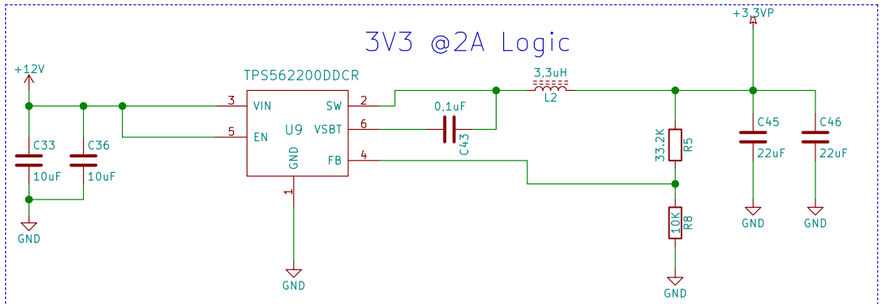

grupo empresarial INSEPET

Sheet: /PowerSupply/
File: PowerSupply.sch

Title: POWER SUPPLY

Size: A3	Date: 2017-03-04	**Rev: B**
KiCad E.D.A. kicad 4.0.6-e0-634953ubuntu16.04.1		Id: 3/12

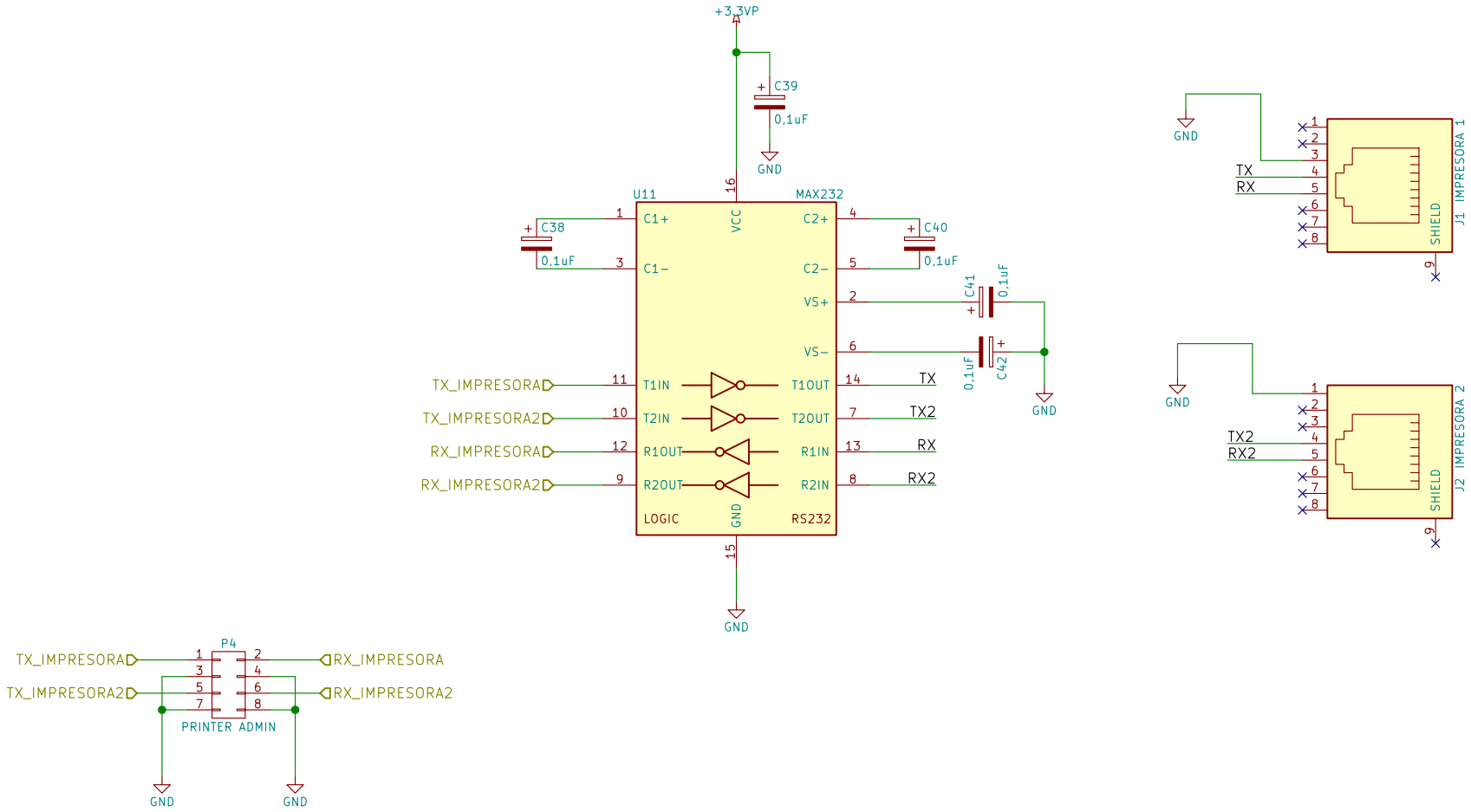

Sheet: /Impresora/		
File: Impresora.sch		
Title: PRINTERS		
Size: A4	Date: 2017-03-04	**Rev: B**
KiCad E.D.A. kicad 4.0.6-e0-634953ubuntu16.04.1		Id: 4/12

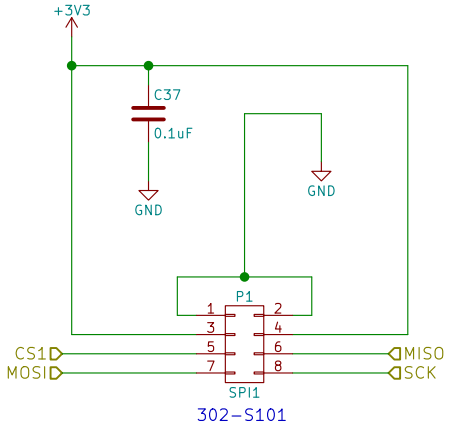

INSEPET LTDA

Sheet: /SPI/
File: SPI.sch

Title: SPI PORT

Size: A4	Date: 2017-03-04	**Rev: C**
KiCad E.D.A. kicad 4.0.6-e0-634953ubuntu16.04.1		Id: 5/12

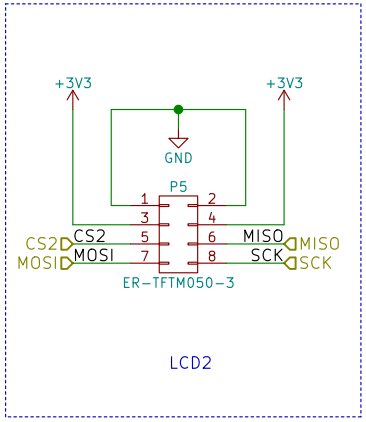

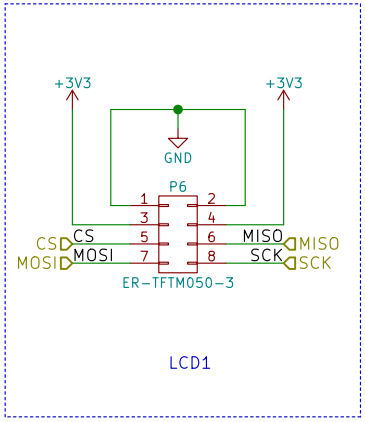

grupo empresarial INSEPET

Sheet: /LCD/
File: LCD.sch

Title: LCD

Size: A4	Date: 2017-03-04	**Rev: B**
KiCad E.D.A.	kicad 4.0.6-e0-634953ubuntu16.04.1	Id: 6/12

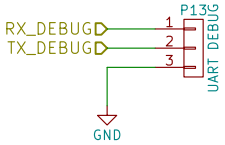

grupo empresarial INSEPET

Sheet: /UART_DEBUG/
File: UART_DEBUG.sch

Title: UART DEBUG PORT

Size: A4	Date: 2017-03-04	**Rev: B**
KiCad E.D.A. kicad 4.0.6-e0-634953ubuntu16.04.1		Id: 7/12

JUMPER 2
Ajustar fuente de corriente a 45mA por medio de RV1
+12V
jumper
P14
C17
22uF
C19
0.1uF
U3
LM317_SOT223
10 OHM
RV1
68WR10LF
R13
22
GNDA
+3.3VP
C22
0.47uF
R14
100
R15
1.5K
TP2
TX_ACTIVE
TX_SURTIDOR
U2B
74HC14
R11
15K
C20
560pF
Q1
MMBTA13
U4
CNY17-1
47.5K
R20
R22
150K
1N6263
D4
Q3
MMBTA2222A
Q5
MMBTA2222A
Q7
MMBTA2222A
150
R24
1K
R26
68.1
R28
C25
0.47uF
C27
33nF
1.5K
R32
221
R33
100K
R34
MMBT2907A
Q9
1.5K
R38
1K
R36
C28
1nF
U6
CNY17-1
U2E
74HC14
P2
SURTIDOR
RX_SURTIDOR
TP3
RX_ACTIVE
R9
1.5K
Q11
MMBT2222A
22K
R10
U2F
74HC14
D8
RX_ACTIVE
3.3K
R41
JUMPER 1
Ground jumper
P15
C30
0.1uF
U2D
74HC14
U2A
74HC14
U2C
74HC14
D2
TX_ACTIVE
3.3K
R18
ACTIVE CURRENT LOOP

U8A
74HC14
C18
0.1uF
U8D
74HC14
TP1
TX_PASSIVE
TX_PC
U8B
74HC14
R12
15K
C21
560pF
Q2
MMBTA13
U5
CNY17-1
47.5K
R21
R23
150K
1N6263
D5
Q4
MMBTA2222A
Q6
MMBTA2222A
Q8
MMBTA2222A
150
R25
1K
R27
68.1
R29
C24
0.47uF
C26
33nF
1.5K
R30
221
R31
100K
R35
MMBT2907A
Q10
1.5K
R40
1K
R39
C29
1nF
U7
CNY17-1
1N4148
D6
D7
68.1
R37
Conexion Invertida
INVERT
U8E
74HC14
P3
PC
RX_PCD
RX_PC
TP4
RX_PASSIVE
R48
1.5K
Q12
MMBT2222A
22K
R47
U8F
74HC14
D9
RX_PASSIVE
3.3K
R42
U8C
74HC14
D3
TX_PASSIVE
3.3K
R19
PASIVE CURRENT LOOP

GND
GNDA
+3.3VP

grupo empresarial INSEPET

Sheet: /CurrentLoop/
File: CurrentLoop.sch

Title: CURRENT LOOP

Size: User	Date: 2017-03-04	**Rev: B**
KiCad E.D.A.	kicad 4.0.6-e0-634953ubuntu16.04.1	Id: 8/12

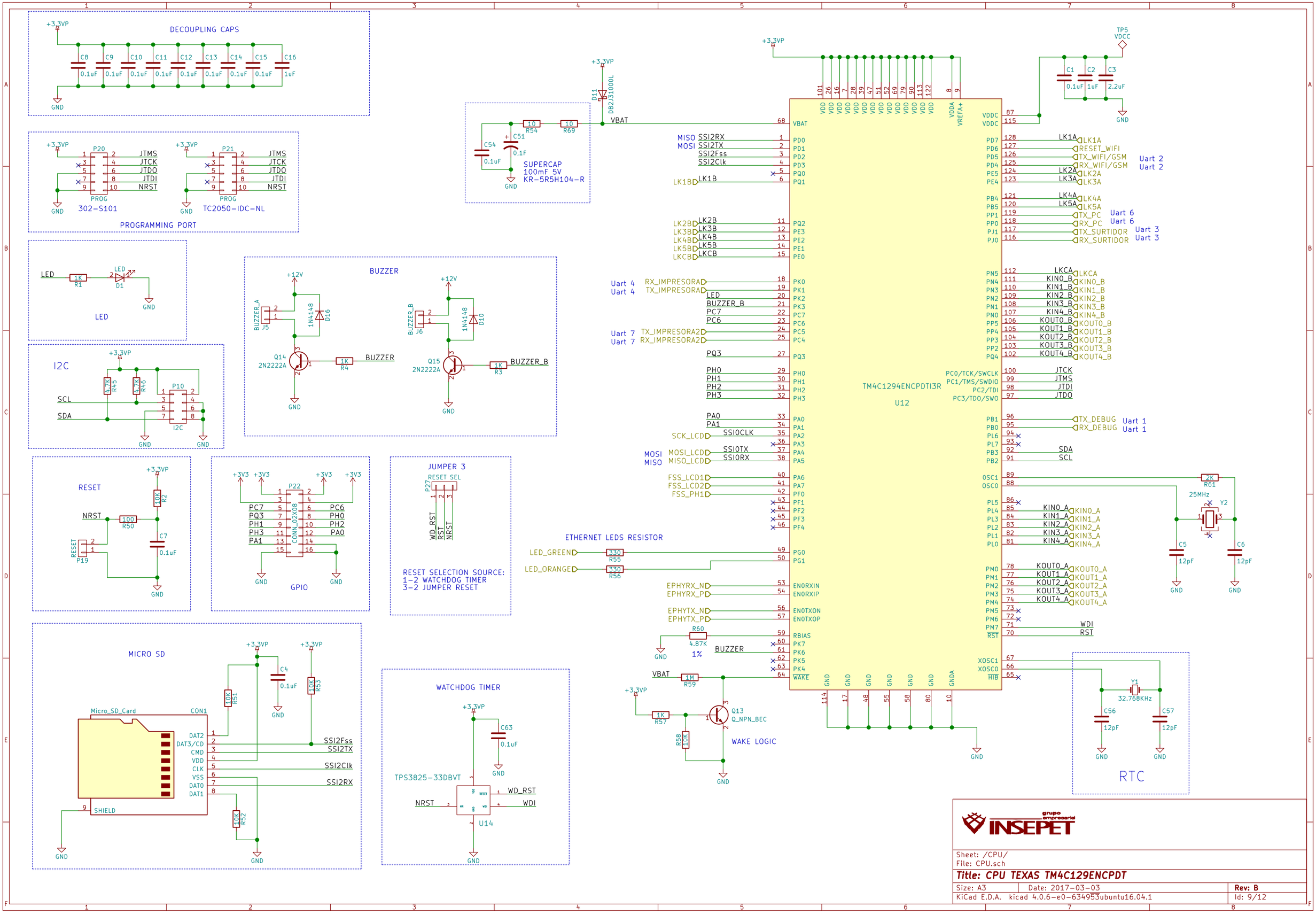
DECOUPLING CAPS
PROGRAMMING PORT
302-S101
TC2050-IDC-NL
LED
BUZZER
I2C
RESET
GPIO
JUMPER 3
RESET SELECTION SOURCE:
1-2 WATCHDOG TIMER
3-2 JUMPER RESET
MICRO SD
WATCHDOG TIMER
TPS3825-33DBVT
U14
SUPERCAP
100mF 5V
KR-5R5H104-R
ETHERNET LEDS RESISTOR
WAKE LOGIC
TM4C1294ENCPDTI3R
U12
RTC
Sheet: /CPU/
File: CPU.sch
Title: CPU TEXAS TM4C129ENCPDT
Size: A3
Date: 2017-03-03
Rev: B
KiCad E.D.A. kicad 4.0.6-e0-634953ubuntu16.04.1
Id: 9/12

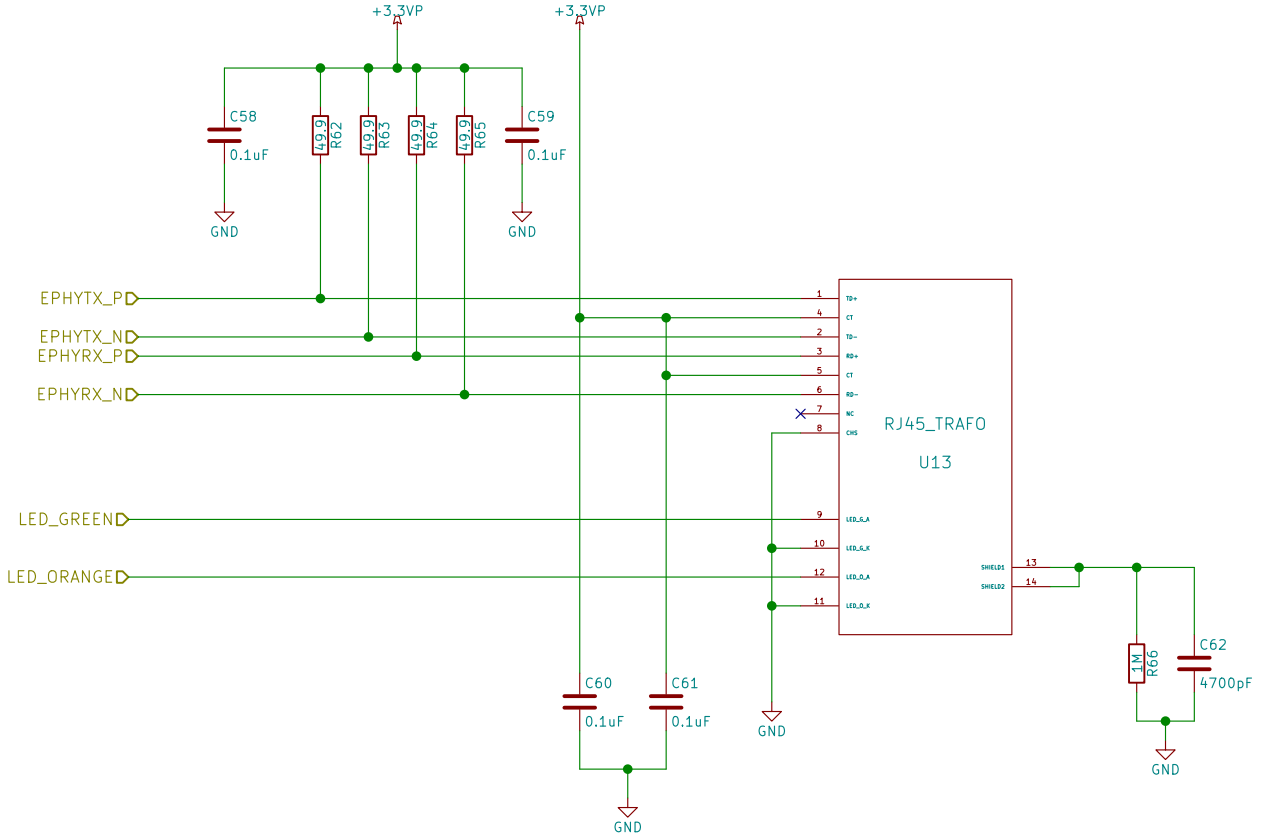

grupo empresarial INSEPET		
Sheet: /ETHERNET/ File: ETHERNET.sch		
Title: ETHERNET		
Size: A4	Date: 2017-03-04	**Rev: B**
KiCad E.D.A. kicad 4.0.6-e0-634953ubuntu16.04.1		Id: 10/12

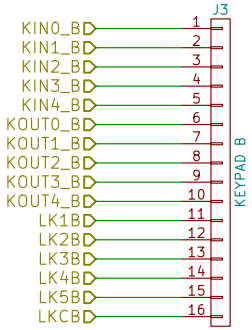

grupo empresarial INSEPET

Sheet: /KEYPAD_B/
File: KEYPAD_B.sch

Title: KEYPAD B

Size: A4	Date: 2017-05-19	**Rev: C**
KiCad E.D.A. kicad 4.0.6-e0-634953ubuntu16.04.1		Id: 11/12

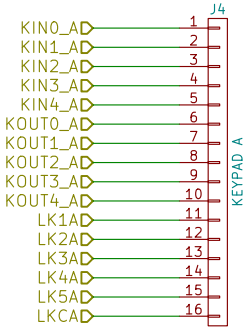

grupo empresarial INSEPET

Sheet: /KEYPAD_A/
File: KEYPAD_A.sch

Title: KEYPAD SIDE A

Size: A4	Date: 2017-05-19	**Rev: C**
KiCad E.D.A. kicad 4.0.6-e0-634953ubuntu16.04.1		Id: 12/12