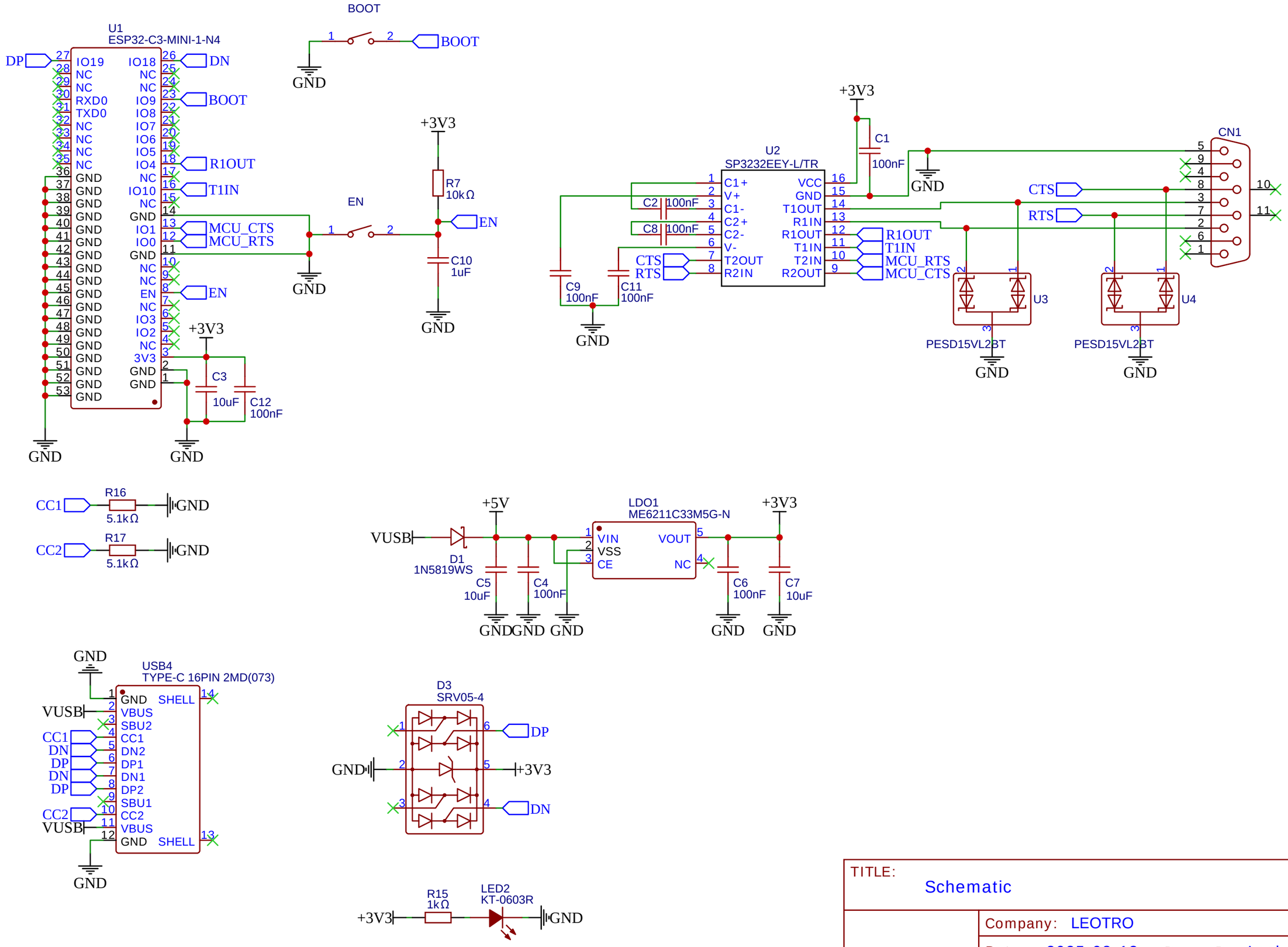

TITLE: Schematic	REV: 1.0
Company: LEOTRO	Sheet: 1/1
Date: 2025-08-13 Drawn By: Loek	