C

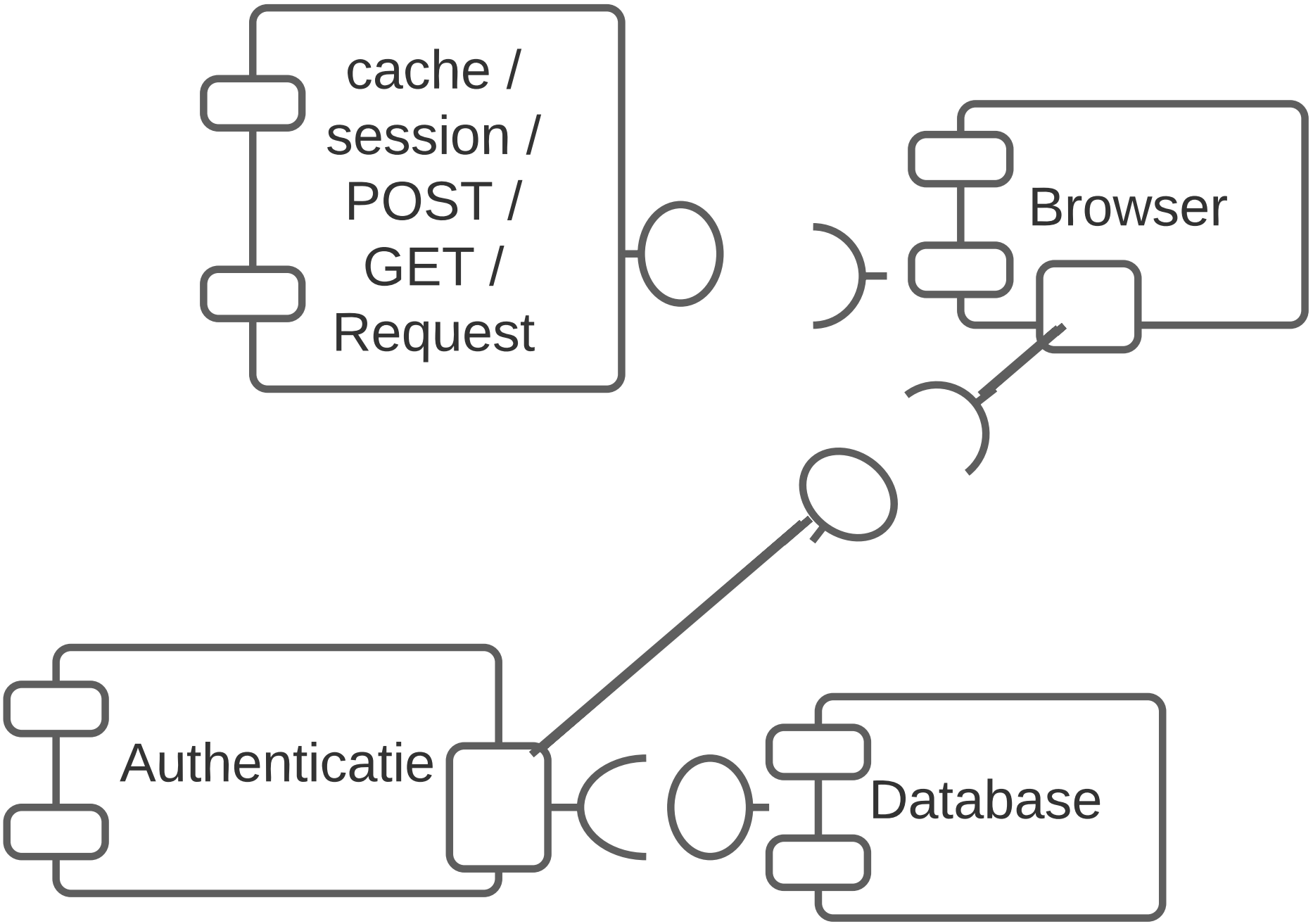
cache /
session /
POST /
GET /
Request
Browser
Authenticatie
Database