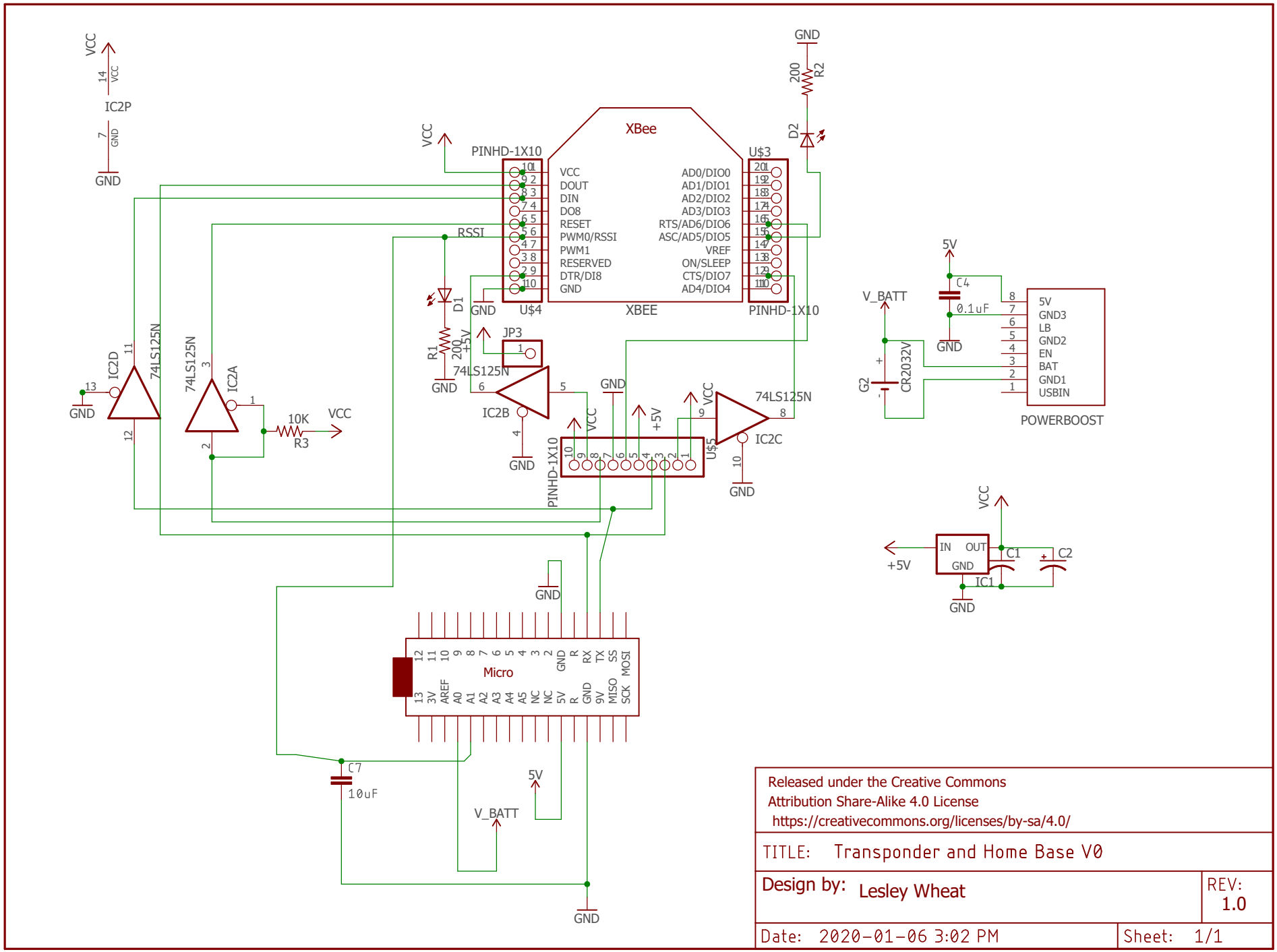
VCC
IC2P
GND
XBee
PINHD-1X10
U$3
U$4
XBEE
VCC
DOUT
DIN
DO8
RESET
PWM0/RSSI
PWM1
RESERVED
DTR/DI8
GND
AD0/DIO0
AD1/DIO1
AD2/DIO2
AD3/DIO3
RTS/AD6/DIO6
ASC/AD5/DIO5
VREF
ON/SLEEP
CTS/DIO7
AD4/DIO4
RSSI
D1
R1
200
JP3
74LS125N
IC2D
IC2A
IC2B
IC2C
10K
R3
R2
D2
U$5
C4
0.1uF
V_BATT
CR2032V
G2
5V
GND3
LB
GND2
EN
BAT
GND1
USBIN
POWERBOOST
IN
OUT
IC1
C1
C2
+5V
Micro
C7
10uF
Released under the Creative Commons
Attribution Share-Alike 4.0 License
https://creativecommons.org/licenses/by-sa/4.0/
TITLE: Transponder and Home Base V0
Design by: Lesley Wheat
REV: 1.0
Date: 2020-01-06 3:02 PM
Sheet: 1/1