ECEN 260 - Laboratory #11

Displays

Leslie Jury

Instructor: Brother Allred
March 14, 2024

Contents

1 Lab Overview **3**
1.1 Objectives 3

2 Specifications **4**
2.1 Parts List 4

3 Schematics **5**

4 Test Plan and Test Results **6**
4.1 Test Plan Procedure 6
4.2 Expected and Observed Results 6

5 Code **7**
5.1 Code for main.c 7

6 Conclusion **10**

List of Tables

List of Figures

1 Schematic diagram for PCD8544. 5
2 Schematic diagram for LCD 1602. 5

1 Lab Overview

In this lab, we'll learn how to communicate to two different kinds of displays. We'll use the information we gathered previously from Canvas such as the pin assignments and the framework of how to display text on the display using the code provided for us to follow and expand upon. In part A we learned how to use the PCD8544 and made our own dictionary of characters to access using the Char Creator in Google Sheets. In part B we learned how to display Hello World on the LCD 1602, we accessed functions to clear the screen and add text to the screen. In part C I used the skills gained in this lab in order to make an animation using the PCD 8544. This animation displays hearts and smiling faces going across the screen.

1.1 Objectives

- To display text on a screen using the LCD 1602.
- To display text on a screen using the PCD8544.
- To create a creative project using one of the screens. Such as an animation.
- To create each character using the provided Char Creator Google Sheet.

2 Specifications

This project involves two different kinds of displays. In this lab we learn how to display text and animation on the PCD8544 and the LCD 1602. The functionality of these displays is dependant on the code that was partially provided from the Canvas course and partially created by me. I declared the characters for the PCD8544 and programmed the animation into that same board. I used the functions provided to operate the LCD 1602. In part C I used the same character creator from part A to create a heart and smile emoticon to add, I used the space character to create the appearance of motion. The delay and clear screen functions were essential for this illusion.

2.1 Parts List

- PCD8544
- LCD 1602
- NUCLEO board and cable
- 7 male/male jumper wires
- A computer with the STM Cube IDE
- A breadboard

3 Schematics

See Figure 2 for the schematic of the wiring for this lab.

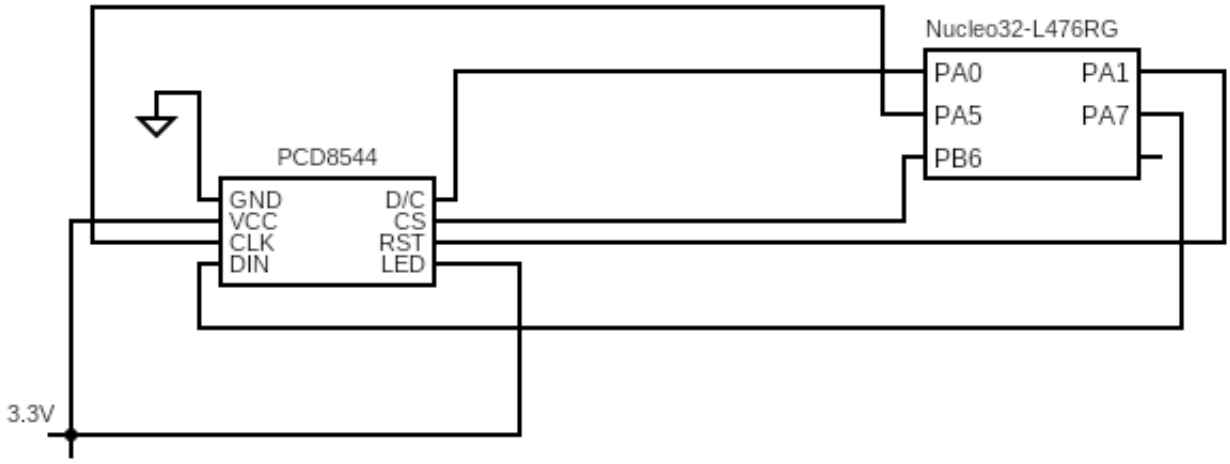

Figure 1: Schematic diagram for PCD8544.

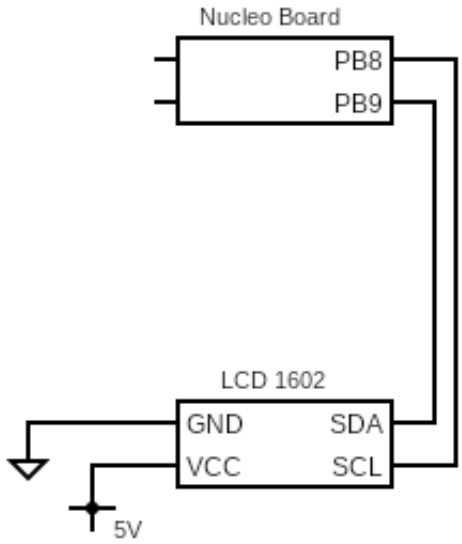

Figure 2: Schematic diagram for LCD 1602.

4 Test Plan and Test Results

Part A: Displaying text on the PCD8544
1. I press the play button to upload the code onto the board
2. HELLO WORLD! appears on the screen
Part B: Displaying text on the 1602 LCD
1. I press the play button to upload the code onto the board
2. HELLO WORLD! appears on the screen
Part C: Displaying an animation on the PCD8544
1. I press the play button to upload the code onto the board
2. Smile faces and hearts slide across a section of the screen.

4.1 Test Plan Procedure

- Test Scenario #1
  - Step 1: Code uploads to NUCLEO board
  - Step 2: HELLO WORLD! appears on the PCD8544
- Test Scenario #2
  - Step 1: Code uploads to NUCLEO board
  - Step 2: HELLO WORLD! appears on the 1602 LCD
- Test Scenario #3
  - Step 1: Code uploads to NUCLEO board
  - Step 2: Smile faces and hearts slide across a section of the screen of the PCD8544.

4.2 Expected and Observed Results

This section should include the the expected and actual results of each test.

- Test Scenario #1
  - Expected Result: HELLO WORLD! appears on the PCD8544
  - Actual Result: HELLO WORLD! appears on the PCD8544
- Test Scenario #2
  - Expected Result: HELLO WORLD! appears on the 1602 LCD
  - Actual Result: HELLO WORLD! appears on the 1602 LCD
- Test Scenario #3
  - Expected Result: Smile faces and hearts slide across a section of the screen of the PCD8544.
  - Actual Result: Smile faces and hearts slide across a section of the screen of the PCD8544.

5 Code

This is where you write the text for this section. You could mention something about the code in Section 5.1 having the code for main.c.

5.1 Code for main.c

```c
// Part A
const char font_table[29][6] = {
 {0x00, 0x00, 0x00, 0x00, 0x00, 0x00}, // space
{0x7E, 0x11, 0x11, 0x11, 0x7E, 0x00}, // 'A'
{0x7F, 0x49, 0x49, 0x49, 0x36, 0x00}, // 'B'
{0x3E, 0x41, 0x41, 0x41, 0x22, 0x00}, // 'C'
{0x7F, 0x41, 0x41, 0x41, 0x3E, 0x00}, // 'D'
{0x7F, 0x49, 0x49, 0x41, 0x00, 0x00}, // 'E'
{0x7F, 0x09, 0x09, 0x01, 0x00, 0x00}, // 'F'
{0x7F, 0x41, 0x51, 0x71, 0x10, 0x00}, // 'G'
{0x7F, 0x08, 0x08, 0x7F, 0x00, 0x00}, // 'H'
{0x41, 0x41, 0x7F, 0x41, 0x41, 0x00}, // 'I'
{0x61, 0x41, 0x7F, 0x01, 0x01, 0x00}, // 'J'
{0x7F, 0x08, 0x14, 0x63, 0x00, 0x00}, // 'K'
{0x7F, 0x40, 0x40, 0x40, 0x00, 0x00}, // 'L'
{0x7F, 0x02, 0x04, 0x02, 0x7F, 0x00}, // 'M'
{0x7F, 0x03, 0x0C, 0x18, 0x7F, 0x00}, // 'N'
{0x7F, 0x41, 0x41, 0x7F, 0x00, 0x00}, // 'O'
{0x7F, 0x09, 0x09, 0x0F, 0x00, 0x00}, // 'P'
{0x7F, 0x41, 0x51, 0x7F, 0x40, 0x00}, // 'Q'
{0x7F, 0x19, 0x29, 0x4F, 0x00, 0x00}, // 'R'
{0x46, 0x49, 0x49, 0x31, 0x00, 0x00}, // 'S'
{0x01, 0x01, 0x7F, 0x01, 0x01, 0x00}, // 'T'
{0x7F, 0x40, 0x40, 0x7F, 0x00, 0x00}, // 'U'
{0x0F, 0x30, 0x40, 0x30, 0x0F, 0x00}, // 'V'
{0x7F, 0x20, 0x10, 0x20, 0x7F, 0x00}, // 'W'
{0x63, 0x14, 0x08, 0x14, 0x63, 0x00}, // 'X'
{0x03, 0x04, 0x78, 0x04, 0x03, 0x00}, // 'Y'
{0x61, 0x51, 0x49, 0x45, 0x43, 0x00}, // 'Z'
{0x40, 0x00, 0x00, 0x00, 0x00, 0x00}, // period
{0x5F, 0x00, 0x00, 0x00, 0x00, 0x00}, // Exclamation
};
...
GLCD_init(); // initialize the screen
  GLCD_clear(); // clear the screen
  GLCD_putchar(8); // 'H'
  GLCD_putchar(5); // 'E'
  GLCD_putchar(12); // 'L'
  GLCD_putchar(12); // 'L'
  GLCD_putchar(15); // 'O'
  GLCD_putchar(0); // ' '
  GLCD_putchar(23); // 'W'
  GLCD_putchar(15); // 'O'
  GLCD_putchar(18); // 'R'
  GLCD_putchar(12); // 'L'
```

```
  GLCD_putchar(4); // 'D'

  // Part B
  void SystemClock_Config(void)
{
  RCC_OscInitTypeDef RCC_OscInitStruct = {0};
  RCC_ClkInitTypeDef RCC_ClkInitStruct = {0};

  /** Configure the main internal regulator output voltage
  */
  if (HAL_PWREx_ControlVoltageScaling(PWR_REGULATOR_VOLTAGE_SCALE1) != HAL_OK)
  {
    Error_Handler();
  }

  /** Initializes the RCC Oscillators according to the specified parameters
  * in the RCC_OscInitTypeDef structure.
  */
  RCC_OscInitStruct.OscillatorType = RCC_OSCILLATORTYPE_HSI;
  RCC_OscInitStruct.HSIState = RCC_HSI_ON;
  RCC_OscInitStruct.HSICalibrationValue = RCC_HSICALIBRATION_DEFAULT;
  RCC_OscInitStruct.PLL.PLLState = RCC_PLL_ON;
  RCC_OscInitStruct.PLL.PLLSource = RCC_PLLSOURCE_HSI;
  RCC_OscInitStruct.PLL.PLLM = 1;
  RCC_OscInitStruct.PLL.PLLN = 10;
  RCC_OscInitStruct.PLL.PLLP = RCC_PLLP_DIV7;
  RCC_OscInitStruct.PLL.PLLQ = RCC_PLLQ_DIV2;
  RCC_OscInitStruct.PLL.PLLR = RCC_PLLR_DIV2;
  if (HAL_RCC_OscConfig(&RCC_OscInitStruct) != HAL_OK)
  {
    Error_Handler();
  }
// Part C
while (1)
  {
    /* USER CODE END WHILE */

    /* USER CODE BEGIN 3 */
  GLCD_clear(); // clear the screen
  GLCD_putchar(30); // Smile
  HAL_Delay(200); // Delay to keep on screen

  GLCD_clear();
  GLCD_putchar(0); // Space
  GLCD_putchar(30); // Smile
  HAL_Delay(200); // Delay to keep on screen

  GLCD_clear();
  GLCD_putchar(0); // Space
  GLCD_putchar(0); // Space
  GLCD_putchar(30); // Smile
  HAL_Delay (200);

  GLCD_clear();
```

```
GLCD_putchar(0); // Space
GLCD_putchar(0); // Space
GLCD_putchar(0); // Space
GLCD_putchar(30); // Smile
HAL_Delay (200);

GLCD_clear();
GLCD_putchar(29); // Heart
GLCD_putchar(0); // Space
GLCD_putchar(0); // Space
GLCD_putchar(0); // Space
HAL_Delay (200);

GLCD_clear();
GLCD_putchar(0); // Space
GLCD_putchar(29); // Heart
GLCD_putchar(0); // Space
GLCD_putchar(0); // Space
HAL_Delay (200);

GLCD_clear();
GLCD_putchar(0); // Space
GLCD_putchar(0); // Space
GLCD_putchar(29); // Heart
GLCD_putchar(0); // Space
HAL_Delay (200);

GLCD_clear();
GLCD_putchar(0); // Space
GLCD_putchar(0); // Space
GLCD_putchar(0); // Space
GLCD_putchar(29); // Heart
HAL_Delay (200);
}
```

6 Conclusion

In conclusion, this lab provided valuable lessons on displaying text on both the PCD8544 and LCD 1602 screens. I found that the LCD 1602 screen, despite its larger display area, was easier to work with compared to the PCD8544. The PCD8544 screen, though simple in software, posed challenges during setup and programming. Its wiring and declaration of letters required extra attention, making it less straightforward to operate in this lab. On the other hand, the LCD 1602 display, with its clear functions, ended up to be a more user-friendly option.

My biggest struggle in this lab was the wiring up of both the displays. Similar to previous labs, we aren't given a specific schematic, we learn how to hook up the jumper cables based on the context of the directions from places such as the preface and the pin setup section. The code, while tedious when it came to the PCD8544, ended up being straightforward. The instructions were harder to follow for wiring than I thought, but after rereading the instructions I found key parts I was missing such as in the foreword where it mentions the LED pin is connected to the same 3.3V source like the VCC pin.

References