ECEN 260 - Final Project

Serial Communication Reactive Concert Lightstick

Leslie Jury

Instructor: Brother Allred
April 10, 2024

Contents

1 Lab Overview **3**
1.1 Objectives 3

2 Specifications **4**
2.1 Parts List 4

3 Schematics **5**

4 Test Plan and Test Results **6**
4.1 Test Plan Procedure 6
4.2 Expected and Observed Results 7

5 Code **8**
5.1 Code for main.c 8

6 Conclusion **11**

List of Tables

List of Figures

1 Schematic diagram for Lab 11. 5

1 Lab Overview

In this lab, I communicated using serial communication, I displayed messages using a display, and I controlled LEDs to follow a specific tempo of a song. I was inspired from concerts which often give their attendees lightsticks that flash to the beat or tempo of a song and even make optical illusions in the crowd, such as a wave with each lightstick in each row following a computer's pre-programmed designs. These usually are controlled wirelessly, but for a good proof of concept, I showed a wired connection. I accomplished this through my own hard work and dedication. This was a wonderful learning experience for me and I hope you have as much fun watching my videos and reading this report as I had creating this wonderfully crafted project.

1.1 Objectives

- To display text on a screen using the LCD 1602.
- To communicate from my laptop to the Nucleo board using serial communication protocols.
- To create a creative project using the topics we learned in class.
- To present and explain my thought process and reasoning for everything I made.

2 Specifications

This project involves several key topics from this semester. These topics include I/O devices, Serial Communication, Display control, LEDs, etc. I used 3 different colored LEDs and taped them onto my paddle which acted as my very own concert lightstick. These are usually controlled wirelessly, but for the sake of time, I decided to just used the wired serial communication protocol we learned in class. This way my laptop represented the main computer that sent commands to all of the lightsticks.

2.1 Parts List

- LCD 1602
- NUCLEO board and cable
- several jumper wires
- A paddle from a paddle-board set
- 3 LEDs
- Tape for both cable management and LED arrangement
- A computer with the STM Cube IDE and PuTTY
- A small breadboard

3 Schematics

See Figure 1 for the schematic of the wiring for this lab.

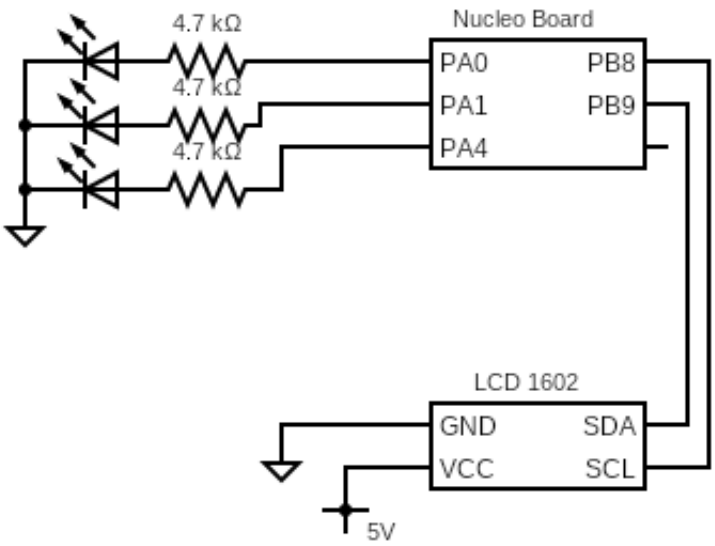

Figure 1: Schematic diagram for Lab 11.

4 Test Plan and Test Results

Part A: Idol
1. I type in the command "IDOL"
2. The lights flash to the tempo and the display shows the name of the song "Idol"
Part B: Sign is B
1. I type in the command "SIGN B"
2. The lights flash to the tempo and the display shows the name of the song "Sign is B"
Part C: Star T Rain
1. I type in the command "STAR T RAIN"
2. The lights flash to the tempo and the display shows the name of the song "Star T Rain"

4.1 Test Plan Procedure

- Test Scenario #1
  - Step 1: I turn on/reset the system
  - Step 2: The lights flash slowly and the display shows "Welcome"
- Test Scenario #2
  - Step 1: I type in the command "IDOL"
  - Step 2: The lights flash to the tempo and the display shows the name of the song "Idol"
- Test Scenario #3
  - Step 1: I type in the command "SIGN B"
  - Step 2: The lights flash to the tempo and the display shows the name of the song "Sign is B"
- Test Scenario #4
  - Step 1: I type in the command "STAR T RAIN"
  - Step 2: The lights flash to the tempo and the display shows the name of the song "Star T Rain"
- Test Scenario #5
  - Step 1: I type in an unrecognized command
  - Step 2: The lights continue to do what they did previous, and my terminal sends a "command not recognized" message

4.2 Expected and Observed Results

This section includes the the expected and actual results of each test.

- Test Scenario #1
  - Expected Result: The lights flash slowly and the display shows "Welcome"
  - Actual Result: The lights flash slowly and the display shows "Welcome"
- Test Scenario #2
  - Expected Result: The lights flash to the tempo and the display shows the name of the song "Idol"
  - Actual Result: The lights flash to the tempo and the display shows the name of the song "Idol"
- Test Scenario #3
  - Expected Result: The lights flash to the tempo and the display shows the name of the song "Sign is B"
  - Actual Result: The lights flash to the tempo and the display shows the name of the song "Sign is B"
- Test Scenario #4
  - Expected Result: The lights flash to the tempo and the display shows the name of the song "Star T Rain"
  - Actual Result: The lights flash to the tempo and the display shows the name of the song "Star T Rain"
- Test Scenario #5
  - Expected Result: The lights continue to do what they did previous, and my terminal sends a "command not recognized" message
  - Actual Result: The lights continue to do what they did previous, and my terminal sends a "command not recognized" message

5 Code

The code in Section 5.1 contains the code for main.c.

5.1 Code for main.c

```c
void all_on()
{
  HAL_GPIO_WritePin(GPIOA, GPIO_PIN_0, GPIO_PIN_SET);
  HAL_GPIO_WritePin(GPIOA, GPIO_PIN_1, GPIO_PIN_SET);
  HAL_GPIO_WritePin(GPIOA, GPIO_PIN_4, GPIO_PIN_SET);
}
void all_off()
{
  HAL_GPIO_WritePin(GPIOA, GPIO_PIN_0, GPIO_PIN_RESET);
  HAL_GPIO_WritePin(GPIOA, GPIO_PIN_1, GPIO_PIN_RESET);
  HAL_GPIO_WritePin(GPIOA, GPIO_PIN_4, GPIO_PIN_RESET);
}
void idol()
{
  bpm = 277;
  lcd_clear();
  lcd_write_string("Song: Idol");


}
void sign_b()
{
  bpm = 292;
  lcd_clear();
  lcd_write_string("Song: Sign B");
}
void star_t_rain()
{
  bpm = 250;
  lcd_clear();
  lcd_write_string("Song: Star T Rain");
}


void HAL_UART_RxCpltCallback(UART_HandleTypeDef *huart){



 if (huart == &huart2){

          // If we get here, it means we received a byte from UART2 and it was placed in "uart2_byte"

          // If uart2_byte isn't \r, \n, or \0, it means the message isn't over yet
          if ((uart2_byte != '\r') && (uart2_byte != '\n') && (uart2_byte != '\0')){
```

```
            // Add uart2_byte to the message
            message[buffer_position] = uart2_byte;
            buffer_position++;

        } else {

            if (strcmp((char*)message, "IDOL") == 0) {

                // Plays the tempo of the song Idol
                idol();

                strncpy((char*)response, "Task complete - Idol is playing. \n\r", MAX_MESSAGE_SIZE);

            }if (strcmp((char*)message, "STAR_T_RAIN") == 0) {

              // Plays the tempo of the song Star T Rain
                star_t_rain();


                strncpy((char*)response, "Task complete - Star T Rain is playing.\n\r", MAX_MESSAGE_SIZE);


            }if (strcmp((char*)message, "SIGN_B") == 0) {

                sign_b();


                strncpy((char*)response, "Task complete - Sign B is playing.\n\r", MAX_MESSAGE_SIZE);


        } else {

                // Else message was not recognized
                strncpy((char*)response, "Task not recognized.\n\r", MAX_MESSAGE_SIZE);
            }

            // Send the response message to laptop
            HAL_UART_Transmit(&huart2, response, strlen(response), UART_DELAY);

            // Zero out message array and response array to get ready for the next message
            memset(message,  0, sizeof(message));
            memset(response, 0, sizeof(response));
            buffer_position = 0;
        }

        // Restart UART2's receive interrupt to wait for next byte
```

```
        HAL_UART_Receive_IT(&huart2, &uart2_byte, 1); //start next byte receive interrupt
    }
}
```

6 Conclusion

In conclusion, this lab provided me a lot of chances for my own creativity, which makes this one of my favorite labs. I got to explore my own ideas and decided on this one, a lightstick which reacts to serial communication. It displays the name of the current song playing as it flashes its lights to the tempo of the song that's currently playing. By synchronizing with the tempo of the current song, the lightstick not only illuminates the surrounding space but also displays the title of the song, thus elevating its utility and aesthetic appeal. In essence, this project shows the convergence of my technical knowledge and creative vision, underscoring my commitment to innovative exploration within the realm of engineering.

This lab has a lot of connections to other labs, such as its serial communication in relation to lab 10, its display in relation to lab 11, as well as its use of I/O devices in relation to lab 5. The lightstick communicated with my laptop through PuTTY, the application we used in lab 10. PuTTY helped me to communicate straight to my board using simple typed commands in the terminal of PuTTY. I used the LCD 1602 display from lab 11 to show the title of the song that was currently playing. Lab 11 being so recent, ended up being very helpful to my memory of how the displays worked. If I had more time I would have used the Nokia screen and shown some animations on the screen to relate to the song. I'd love to even show video on the screen, such as a clip from the music video of that song. I also made use of LEDs, which were first used in this class for lab 5, a security system. That lab, while early, was helpful for all the following labs, so in some ways the most monumental lab I'm referencing.

References