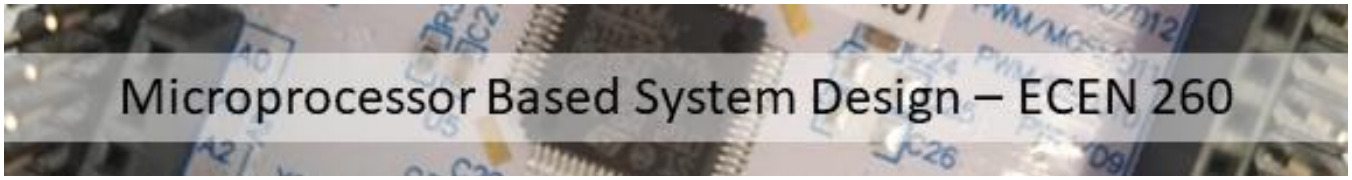

ECEN 260 Lab Report

Lab #8: Interrupts Lab

Name: Leslie Jury

Date: 3/12/24

Instructor: Brother Allred

Semester: Winter 2024

This lab report was created from a template by a student in ECEN 260 during the Winter 2024 semester.
Use of this report by students in other semesters is not allowed and is academic dishonesty.

Lab Overview

For this lab our main objectives are to learn how to use interrupts for programming I/O ports, and to create a home entrance system that relies on interrupts. In this lab, we'll create a smart home entrance system. It will use an interrupt signal to alert the microcontroller whenever a key on the keypad is pressed. The program will then read the pressed key value and react accordingly.

Specifications

The home system that this lab creates is operated using a 4x4 button matrix. 10 digits of numbers, 4 letter keys, and 2 characters we don't use in this lab. The A key is used for starting to set a new password. The B key is used for finishing setting a password. The C key is used to start a password attempt. The D key finishes attempting a password. We also have 4 LEDS, the armed status light, the correct light, the wrong light, and the locked-out light. The armed light shines when a password is in place and the system is engaged. The correct light shines when after arming the system, a correct password is input. The wrong password light shines when after the system is armed, a false password is input. The locked-out light appears after 4 incorrect attempts at the password have been made.

Schematic

Note: I put the LEDs on this diagram backwards on accident.

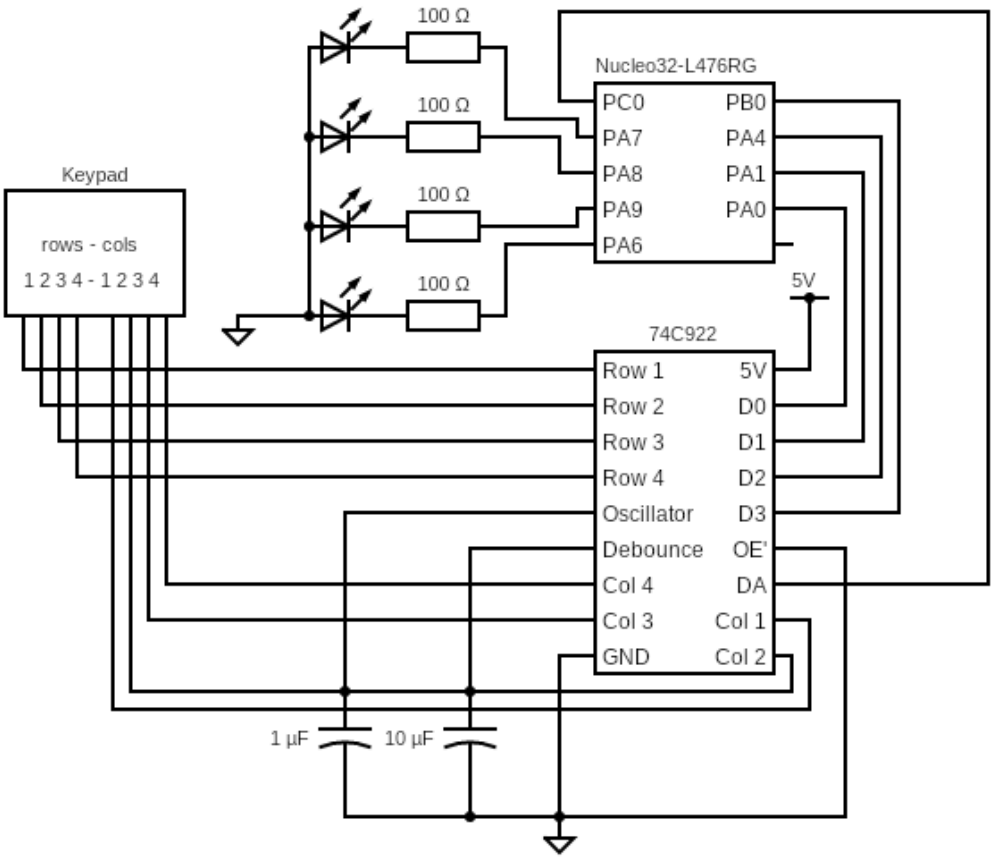

Figure 1: A schematic of the final system.

This lab report was created from a template by a student in ECEN 260 during the Winter 2024 semester.
Use of this report by students in other semesters is not allowed and is academic dishonesty.

Test Plan and Results

Fill out the table below with your test plan. The test plan should include several tests, each with precise steps to complete the test. The set of tests should include common cases as well as edge cases / error cases as appropriate. Each test should also accurately indicate *specific* expected results. Then, the actual results should be recorded after completing each test. Delete this paragraph. (i.e., Don't leave the template instructions in your report.)

#	Test Scenario	Expected Result	Observed Result
1	Press A	KEY_LED flashes	KEY_LED flashes
2	Input password	KEY_LED flashes for each key press	KEY_LED flashes for each key press
3	Press B	KEY_LED flashes and armed light turns on	KEY_LED flashes and armed light turns on
4	Press C, put in false password and press D	KEY_LED flashes for each key press and the false light turns on	KEY_LED flashes for each key press and the false light turns on
5	Press C, put in false password 3 more times, pressing D each time	KEY_LED flashes for each key press and the false light turns on each time. Then the locked out light turns on.	KEY_LED flashes for each key press and the false light turns on each time. Then the locked out light turns on.
6	Reset system and do steps 1-3 again. Now press C, put in the correct password, and press D	The correct light turns on	The correct light turns on

Table 1: Test plan with expected and observed results.

Code

Even

```
void HAL_GPIO_EXTI_Callback(uint16_t GPIO_Pin) {

        // Check if the interrupt was for Disarm Button
        if (GPIO_Pin == DISARM_BUTTON_Pin) {

                // Reset system
                alarm = false;
                locked = false;
                entering_password = false;
                saving_password = false;
                num_attempts = 0;
                password_index = 0;
```

This lab report was created from a template by a student in ECEN 260 during the Winter 2024 semester.
Use of this report by students in other semesters is not allowed and is academic dishonesty.

```
            // Turn off lights
            HAL_GPIO_WritePin(R_LED_GPIO_Port, R_LED_Pin, GPIO_PIN_RESET); // turn off R_LED
            HAL_GPIO_WritePin(Y_LED_GPIO_Port, Y_LED_Pin, GPIO_PIN_RESET); // turn off Y_LED
            HAL_GPIO_WritePin(G_LED_GPIO_Port, G_LED_Pin, GPIO_PIN_RESET); // turn off G_LED
            HAL_GPIO_WritePin(B_LED_GPIO_Port, B_LED_Pin, GPIO_PIN_RESET); // turn off B_LED
        }

        // Check if the interrupt was for Data Available Pin
        if (GPIO_Pin == DATA_AVAILABLE_Pin) {

            // Turn on LED2 to show key press detected
            HAL_GPIO_WritePin(KEY_LED_GPIO_Port, KEY_LED_Pin, GPIO_PIN_SET); // turn on the
KEY_LED (LED2)

            // Read data
            uint8_t key = keypad_decode();  // determine which key was pressed

            if (!alarm) {

                // Based on what key was pressed, do something (each case)
                switch (key) {

                case 0xA: // button "A" was pressed

                    if (locked == false) { // if not already locked

                        // Clear temporary password
                        for (int i = 0; i < 10; i++){
                            temporary_password[i] = -1;
                        }

                        // Change status (user is saving a new password)
                        saving_password = true;
                        password_index = 0;  // reset password index

                        // Turn off indicator lights while entering new password
```

This lab report was created from a template by a student in ECEN 260 during the Winter 2024 semester.
Use of this report by students in other semesters is not allowed and is academic dishonesty.

```
                HAL_GPIO_WritePin(R_LED_GPIO_Port, R_LED_Pin, GPIO_PIN_RESET); //
Turns off R_LED
                HAL_GPIO_WritePin(Y_LED_GPIO_Port, Y_LED_Pin, GPIO_PIN_RESET); //
turn off Y_LED
                HAL_GPIO_WritePin(G_LED_GPIO_Port, G_LED_Pin, GPIO_PIN_RESET); //
turn off G_LED
                HAL_GPIO_WritePin(B_LED_GPIO_Port, B_LED_Pin, GPIO_PIN_RESET); //
turn off B_LED
            }

            break; // end case 0xA

        case 0xB: // button "B" was pressed

            if (locked == false) { // if not already locked

                // Store temp password as current password
                for (int i = 0; i < 10; i++){
                    current_password[i] = temporary_password[i];
                }

                // Turn on blue (new password successfully saved - system is
locked)
                HAL_GPIO_WritePin(B_LED_GPIO_Port, B_LED_Pin, GPIO_PIN_SET);
// turn on B_LED

                // Change status (user is finished saving a new password)
                saving_password = false;
                locked = true;
            }

            break; // end case 0xB

        case 0xC: // button "C" was pressed

            // Clear temporary password
            for (int i = 0; i < 10; i++){
                temporary_password[i] = -1;
            }
```

This lab report was created from a template by a student in ECEN 260 during the Winter 2024 semester.
Use of this report by students in other semesters is not allowed and is academic dishonesty.

```
                        // Change status (user is entering password to check)
                        entering_password = true;
                        password_index = 0; // reset password index

                        // Turn off password indicator lights while checking new password
                        // Turn off lights
                        HAL_GPIO_WritePin(R_LED_GPIO_Port, R_LED_Pin, GPIO_PIN_RESET); //
turn off R_LED
                        HAL_GPIO_WritePin(Y_LED_GPIO_Port, Y_LED_Pin, GPIO_PIN_RESET); //
turn off Y_LED
                        HAL_GPIO_WritePin(G_LED_GPIO_Port, G_LED_Pin, GPIO_PIN_RESET); //
turn off G_LED

                        break; // end case 0xC

                    case 0xD: // button "D" was pressed

                        if (entering_password) { // if password was being entered

                            // Change status (user is finished entering password to
check)
                            entering_password = false;
                            password_index = 0;
                            locked = false;

                            // Compare temporary password with current password
                            for (int i = 0; i < 10; i++) {
                                if (current_password[i] != temporary_password[i]){
                                    locked = true; // digit is incorrect, keep
locked
                                }
                            }

                            // If password is correct
                            if (locked == false) {

                                // Reset attempt count
```

This lab report was created from a template by a student in ECEN 260 during the Winter 2024 semester.
Use of this report by students in other semesters is not allowed and is academic dishonesty.

```
                                        num_attempts = 0;

                                        // Turn on green (correct password entered)
                                        HAL_GPIO_WritePin(G_LED_GPIO_Port, G_LED_Pin,
GPIO_PIN_SET); // turn on G_LED

                                        // Turn off blue (system is unlocked)
                                        HAL_GPIO_WritePin(B_LED_GPIO_Port, B_LED_Pin,
GPIO_PIN_RESET); // turn off B_LED

                                } else { // password is incorrect

                                        // Increment attempt count
                                        num_attempts++;

                                        // if 3 wrong attempts
                                        if (num_attempts >= 3) {

                                                // Turn on red (alarm!)
                                                HAL_GPIO_WritePin(R_LED_GPIO_Port, R_LED_Pin,
GPIO_PIN_SET); // turn on R_LED
                                                alarm = true;

                                        } else {

                                                // Turn on yellow (incorrect password entered)
                                                HAL_GPIO_WritePin(Y_LED_GPIO_Port, Y_LED_Pin,
GPIO_PIN_SET); // turn on Y_LED

                                        }
                                }

                        }

                        break; // end case 0xD

                case 0xE: // key E (*) does nothing
                        break;
```

This lab report was created from a template by a student in ECEN 260 during the Winter 2024 semester.
Use of this report by students in other semesters is not allowed and is academic dishonesty.

```
                case 0xF: // key F (#) does nothing
                        break;

                default: // this means a number was pressed

                        // if current status == storing new password
                        if (saving_password) {

                                if (password_index < 10) {

                                        // store digit into temporary password
                                        temporary_password[password_index++] = key;

                                        // if max digits reached, finish and store
                                        if (password_index == 10) {

                                                // Store new password
                                                for (int i = 0; i < 10; i++){
                                                        current_password[i] =
temporary_password[i];
                                                }

                                                // Turn on blue (new password successfully
saved - system is locked)
                                                HAL_GPIO_WritePin(B_LED_GPIO_Port, B_LED_Pin,
GPIO_PIN_SET); // turn on B_LED

                                                // Change status
                                                saving_password = false;
                                                locked = true;
                                        }
                                }
                        }

                        // if status == entering password to check
                        else if (entering_password) {
```

This lab report was created from a template by a student in ECEN 260 during the Winter 2024 semester.
Use of this report by students in other semesters is not allowed and is academic dishonesty.

```
                                // store digit into temporary password
                                if (password_index < 10){
                                        temporary_password[password_index++] = key; // store digit
                                }
                        }
                        break; // end default case
                }
        }

        // wait for user to release key, then turn off LED2
        while (HAL_GPIO_ReadPin(DATA_AVAILABLE_GPIO_Port, DATA_AVAILABLE_Pin) == GPIO_PIN_SET);
        HAL_GPIO_WritePin(KEY_LED_GPIO_Port, KEY_LED_Pin, GPIO_PIN_RESET); // turn off the KEY_LED (LED2)

    }

}

// This function reads the four data pins from the keypad encoder and maps them to the key value
    unsigned char keypad_decode() {
    unsigned char key = 0x0;
    unsigned char data = 0b0000;

    // read the data pins and combine into the 4-bit value: D3_D2_D1_D0
    unsigned char DATA0 = HAL_GPIO_ReadPin(DATA0_GPIO_Port, DATA0_Pin);
    unsigned char DATA1 = HAL_GPIO_ReadPin(DATA1_GPIO_Port, DATA1_Pin);
    unsigned char DATA2 = HAL_GPIO_ReadPin(DATA2_GPIO_Port, DATA2_Pin);
    unsigned char DATA3 = HAL_GPIO_ReadPin(DATA3_GPIO_Port, DATA3_Pin);
    data = (DATA3 << 3) | (DATA2 << 2) | (DATA1 << 1) | (DATA0); // read D3, D2, D1, and D0 and then combine them into a 4-bit number: D3_D2_D1_D0

    // The key encoder gives the following "data" values:
    // 0 1 2 3
    // 4 5 6 7
    // 8 9 A B
```

This lab report was created from a template by a student in ECEN 260 during the Winter 2024 semester.
Use of this report by students in other semesters is not allowed and is academic dishonesty.

```
    // C D E F

    // The following switch statement re-maps it to these "key" names:
    // 1 2 3 A
    // 4 5 6 B
    // 7 8 9 C
    // E 0 F D, where E is * and F is #

// Finish this switch statement to remap the "data" to the correct "key"
    switch (data) {
   case 0x0:
      key = 0x1;
      break;
   case 0x1:
      key = 0x2;
      break;
   case 0x2:
      key = 0x3;
      break;
   case 0x3:
      key = 0xA;
      break;
   case 0x4:
      key = 0x4;
      break;
   case 0x5:
      key = 0x5;
      break;
   case 0x6:
      key = 0x6;
      break;
   case 0x7:
      key = 0xB;
      break;
   case 0x8:
      key = 0x7;
```

This lab report was created from a template by a student in ECEN 260 during the Winter 2024 semester.
Use of this report by students in other semesters is not allowed and is academic dishonesty.

```
            break;
        case 0x9:
            key = 0x8;
            break;
        case 0xA:
            key = 0x9;
            break;
        case 0xB:
            key = 0xC;
            break;
        case 0xC:
            key = 0xE;
            break;
        case 0xD:
            key = 0x0;
            break;
        case 0xE:
            key = 0xF;
            break;
        case 0xF:
            key = 0xD;
            break;
        }

        return key;
}
```

Conclusion

In this lab we learned about interrupts and how we can utilize them for things like security systems. We aimed to achieve two main objectives: learning how to use interrupts for programming I/O ports and creating a home entrance system that relies on interrupts. We built a smart home entrance system that works by using interrupts to notify the microcontroller whenever a key on the keypad is pressed. Then, the program reads the pressed key value and reacts accordingly.

Building on our previous programming experience involving interrupts, this lab serves as a practical application of our knowledge. By integrating interrupts into the design of a smart home entrance system, we expand upon our understanding of how interrupts can be utilized to enhance the functionality of microcontroller-based projects.

This lab report was created from a template by a student in ECEN 260 during the Winter 2024 semester.
Use of this report by students in other semesters is not allowed and is academic dishonesty.