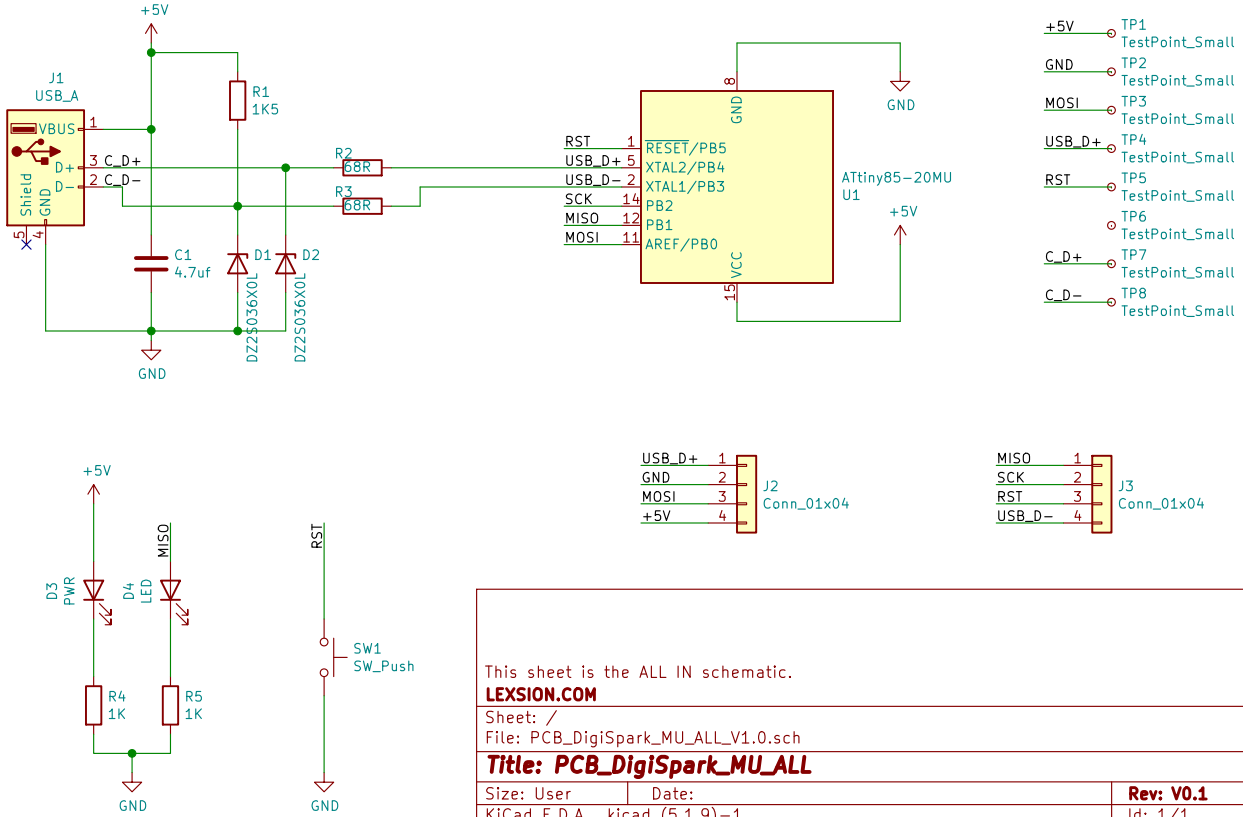

This sheet is the ALL IN schematic.

LEXSION.COM

Sheet: /

File: PCB_DigiSpark_MU_ALL_V1.0.sch

Title: PCB_DigiSpark_MU_ALL

Size: User	Date:	Rev: V0.1
KiCad E.D.A. kicad (5.1.9)−1		Id: 1/1