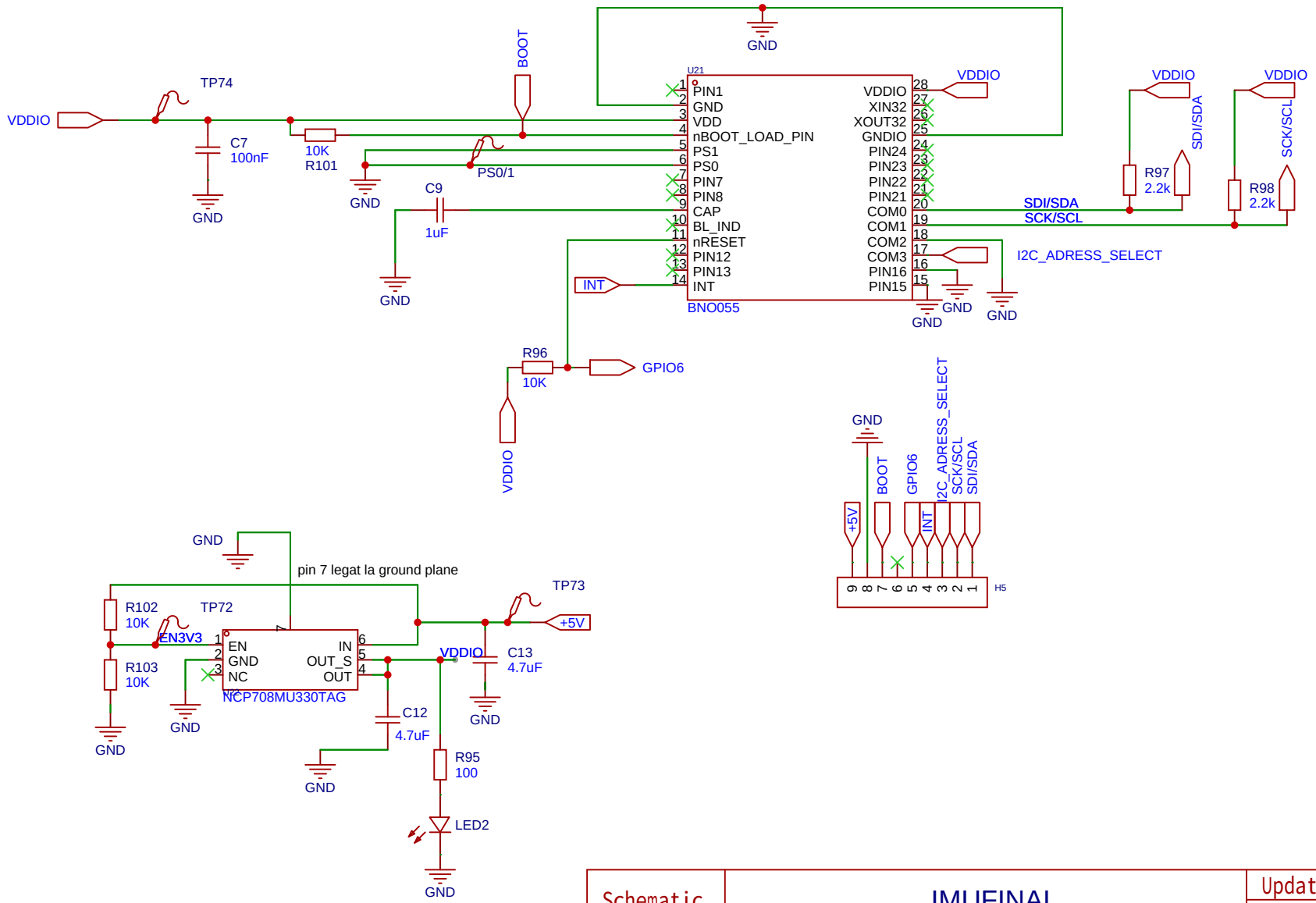

Schematic	IMUFINAL	Update Date	2024-10-04
		Create Date	2024-10-03
Page	P1	Part Number	JLCPCB-002
Drawn	EasyEDA	BFMC_Power Board V2	
Reviewed	EasyEDA		
		VER	SIZE	PAGE 1 OF 1
EasyEDA		V0.1	A4	EasyEDA.com