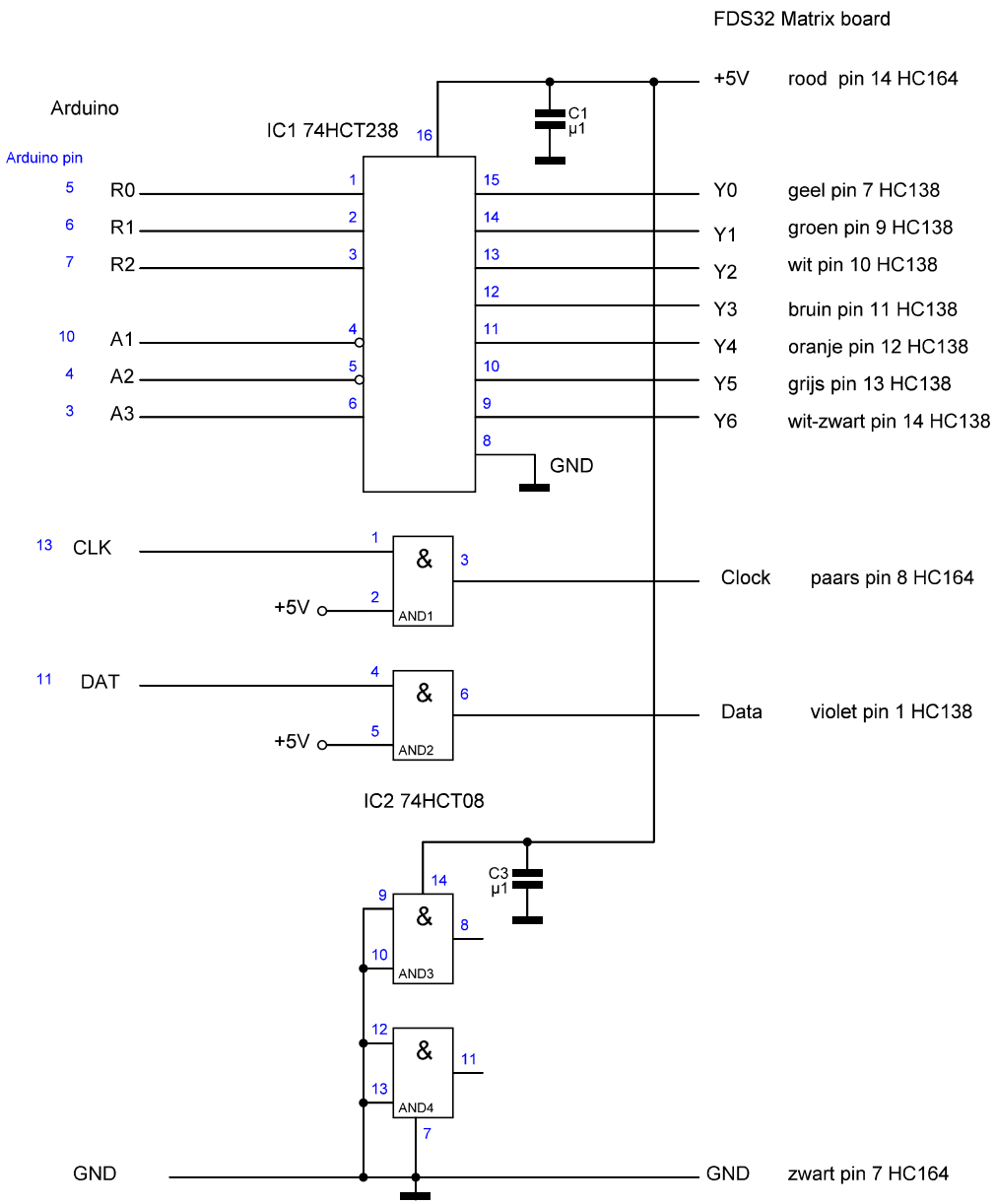
FDS32 Matrix board
Arduino
Arduino pin
IC1 74HCT238
C1
µ1
+5V
rood pin 14 HC164
5 R0
6 R1
7 R2
10 A1
4 A2
3 A3
Y0
geel pin 7 HC138
Y1
groen pin 9 HC138
Y2
wit pin 10 HC138
Y3
bruin pin 11 HC138
Y4
oranje pin 12 HC138
Y5
grijs pin 13 HC138
Y6
wit-zwart pin 14 HC138
GND
13 CLK
+5V
AND1
Clock
paars pin 8 HC164
11 DAT
+5V
AND2
Data
violet pin 1 HC138
IC2 74HCT08
C3
µ1
AND3
AND4
GND
GND
zwart pin 7 HC164