Development of a Scalable Neutral Atom Quantum Processor with Applications in Quantum Simulation

Zhengjiang Li[4], Jinyu Zhou[1], Kai Xiang Lee[1], Abhishek Jamunkar[1], Tong-Yan Xia[1], Vasu Dev[1], Vincent Mancois[2,3], Kelvin Lim[2], Jintao Yang[1], Boon Long Ng[1], Vanessa Koh[1], Thanh Nguyen[1], Mujahid Aliyu[1], Zilong Chen[1], David Wilkowski[1,2,3,4]

[1]*Centre for Quantum Technologies, National University of Singapore, Singapore 117543.*

[2]*Centre for Disruptive Photonic Technologies, SPMS, The Photonics Institute, Nanyang Technological University, Singapore 637371, Singapore.*

[3]*MajuLab, International Joint Research Unit IRL 3654, CNRS, Université Côte d'Azur, Sorbonne Université, National University of Singapore, Nanyang Technological University, Singapore, Singapore*

[4]*School of Physical and Mathematical Sciences, Nanyang Technological University, 21 Nanyang Link, Singapore 637371, Singapore*

We are developing scalable quantum processors based on neutral atom arrays, targeting systems with over 200 qubits. Six experimental setups are being constructed, each designed for a specific purpose. Currently, we are building a 2D magneto-optical trap (MOT), a science chamber that maintains an ultrahigh vacuum to minimize atom loss during quantum processing, an optical tweezer array using a spatial light modulator (SLM), and a 3D MOT for atom capture and cooling, equipped with an active magnetic field compensation system to minimize ambient magnetic fluctuations. Our future goal is to implement quantum error correction and quantum simulation experiments on the Cs-based quantum processors.

Experimental design and progress

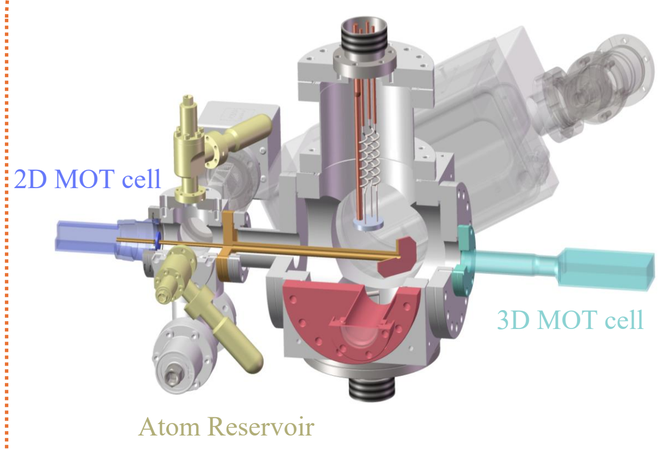

Vacuum system

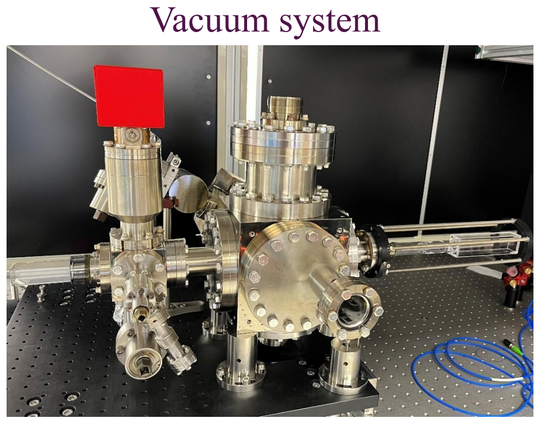

- Independent Rb or Cs atom reservoir.
- 2D MOT and 3D MOT chambers connected by a differential tube
- Vacuum pressure ~ 10^{-9} Torr at 2D MOT cell and < 10^{-11} Torr at 3D MOT cell, maintained by two Ti-sublimation pumps and a large ion pump

2D MOT

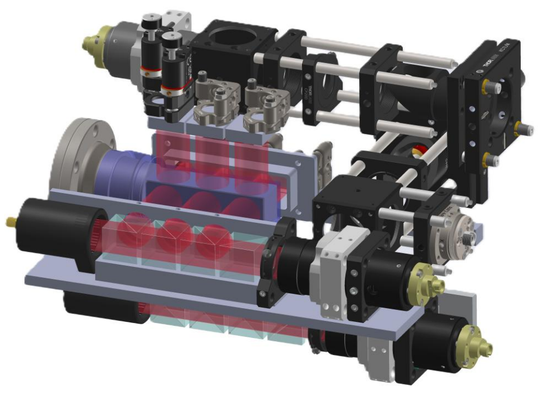

- 2D transverse cooling + 1D longitudinal hollow beam cooling
- Three beam splitters are used in each transversal direction to increase the trapping volume.
- Cooling beam size ~1cm, pushing beam size ~ 3mm

Tweezer generation and optimization

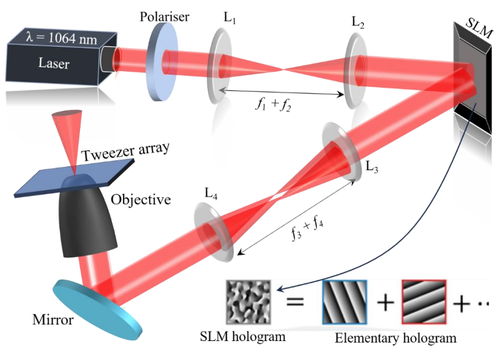

- 20 x 20 static optical tweezers generated by phase hologram imprinted on a spatial light modulators
- Intensity homogeneity can be optimized by implementing modified WGS algorithm

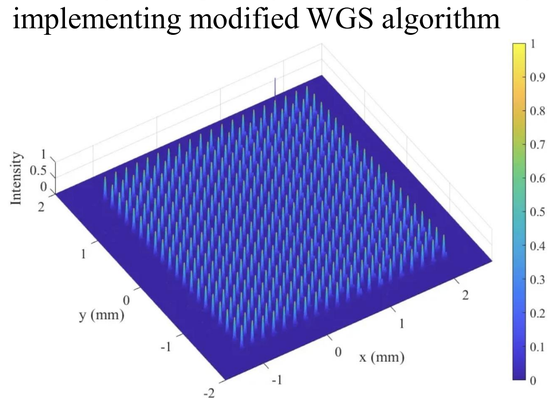

Experimental result with 400 spots: RMS intensity inhomogeneity ~ 0.7%

Cesium hyperfine qubit

Qubit encoded in magnetic-insensitive hyperfine ground states ($|1\rangle = 6S_{1/2}\,|4,0\rangle$, $|0\rangle = 6S_{1/2}|3,0\rangle$) with qubit frequency of 9.2GHz

Single qubit gates via Raman Transition

- Fast single-qubit π rotation ~ 1us can be realized by driving 895nm Raman transition between two qubit states
- Target gate fidelity >99.9%

Two qubit CZ gate via Rydberg Excitation

- Two-photon excitation scheme 1060+ 456
- High laser power available for fast CZ gate ~ 200ns
- Target gate fidelity > 99%.

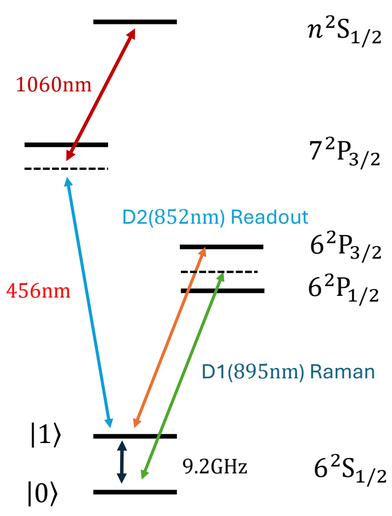

Energy level diagram of Cesium atom

Quantum Simulation in High energy Physics

Simulation of Lattice gauge field theory

- Mapping between lattice gauge theory and Rydberg atom arrays. Utilizing Rydberg blockade effect.
- String breaking has been simulated under this scheme[1]. Simulations of non-Abelian LGTs could also be pursued in our platform.

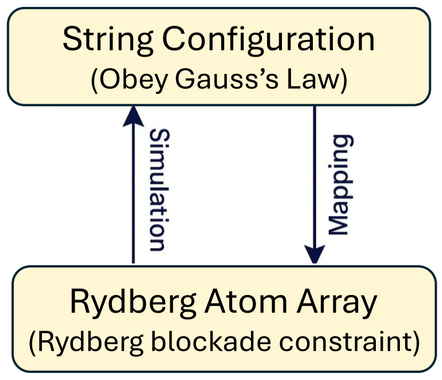

Simulation of holographic duality

- Mapping between holographic duality, spin systems and Rydberg atom arrays.
- "Spacetime-localized response" in AdS/CFT duality has been proposed for simulation on a Rydberg atom array platform[2].
- Other topics of interest related to AdS/CFT duality, such as black hole information, could also be explored using this platform.

3D MOT

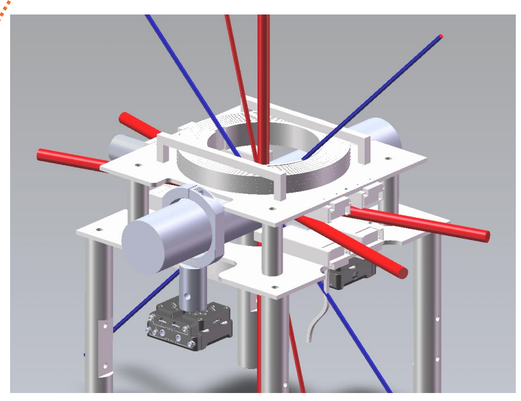

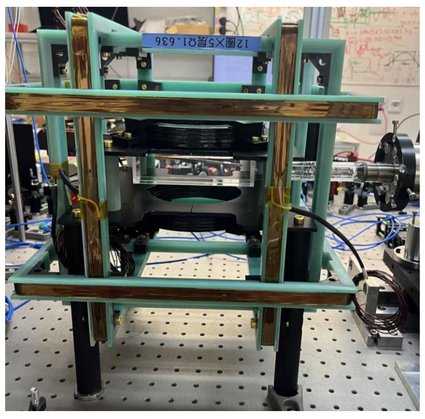

- MOT coils generate magnetic field gradient of about 15 Gauss/cm
- Water-cooled hollow wires are used, with a pump providing pressure up to 8 bar.
- A temperature feedback system will be implemented by controlling the water flow rate.
- Two high NA objectives for focusing trapping lights (1060 nm) and collecting atomic fluorescence (852nm).
- Multi-stage laser cooling (red): MOT cooling + Polarization gradient cooling + Lambda-enhanced grey molasses cooling.
- Additional two pairs of orthogonal beams (blue) for qubit state readout.

Magnetic Active Compensation

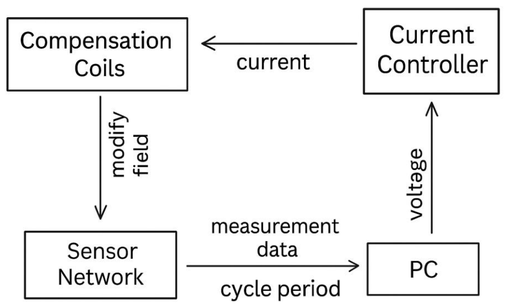

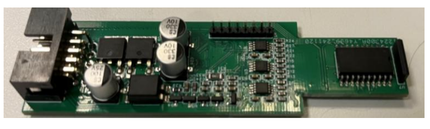

- High-precision magnetic sensors (resolution and noise ~60 μG) are used to detect ambient magnetic fields.
- Three orthogonal pairs of Helmholtz coils provide both compensation and bias magnetic fields.
- PID feedback control will be implemented via a PC-based system.
- The target residual magnetic noise is below 1 mG.

References

[1] González-Cuadra, D. et al, Observation of string breaking on a (2 + 1)D Rydberg quantum simulator. Nature 642, 321–326 (2025);

[2]Bamba, M. et *al*., Spacetime-localized response in quantum critical spin systems: Insights from holography. Physical Review D 109, 126003 (2024).

Centre for Quantum Technologies

NUS National University of Singapore

NANYANG TECHNOLOGICAL UNIVERSITY SINGAPORE

Centre for Quantum Technologies
National University of Singapore
S15 #03-18 Science Drive 2 Singapore 117543
www.quantumlah.org