Chapter 1 Exercises

1.1 Given the waveforms of voltage v and current i of an element as shown in fig. p1-1, and assume they have associated reference direction. Find the waveforms of the waveform of corresponding power p and energy w absorbed by the element.

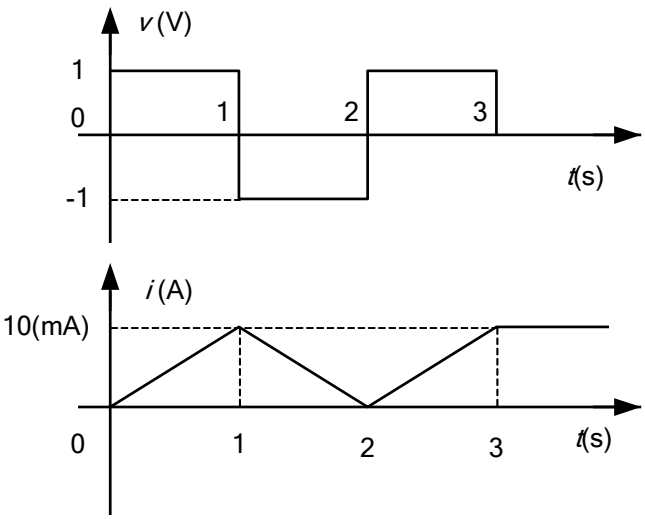

Figure P1-1

1.2 For each element in figure P1-2, find

(1) v_a , if element A absorbs a power of 10W.

(2) i_b , if element B dissipates 10W.

(3) i_b , if element C absorbs -10W.

(4) Power absorbed by element D.

(5) i_e , if element E gives out a power of 10W.

(6) i_f , if element F supplies a power of -10W.

(7) i_g , if element G supplies 10mW.

(8) Power supplied by element H.

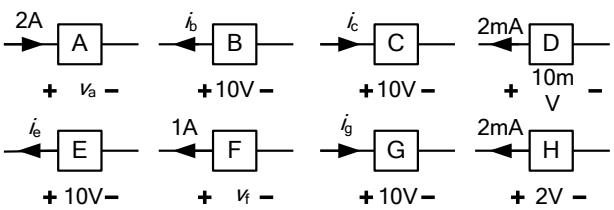

Figure P1-2

1.3 For each element in fig. P1-3, the reference directions of its voltage and current are shown in the figure. Some values of these variables are known as listed in table P1-3. Compute the remaining unknowns shown as question marks.

Table P1-3 Variable values in Fig. P1-3

Variable	Element1	Element 2	Element 3	Element 4	Element 5

v	+100V	?	+25V	?	?
i	?	+5mA	?	?	?
p	-1W	?	?	0.75W	?

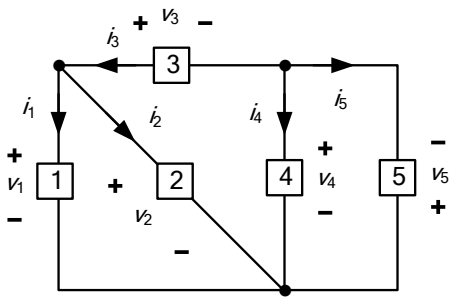

Figure P1-3

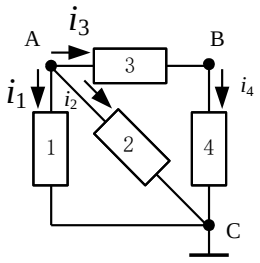

Figure P1-4

1.4 For the circuit in Fig. P1-4

(1) Identify all nodes and loops in the circuit.

(2) Find out all series and parallel combinations of elements.

(3) Write KCL and KVL equations.

(4) If $i_1 = 6\,\text{mA}$ and $i_2 = -4\,\text{mA}$, find other currents.

1.5 Variables in a circuit with 5 elements meet the following Kirchhoff law constrains

$$i_1 + i_2 - i_3 = 0 \qquad v_1 - v_2 = 0$$
$$i_3 + i_4 + i_5 = 0 \qquad v_2 + v_3 - v_4 = 0$$
$$v_4 - v_5 = 0$$

Assume every pair of voltage and current for an element satisfies passive sign convention, draw the circuit.

1.6 Determine the current i_x in each graph of Fig. P1-6.

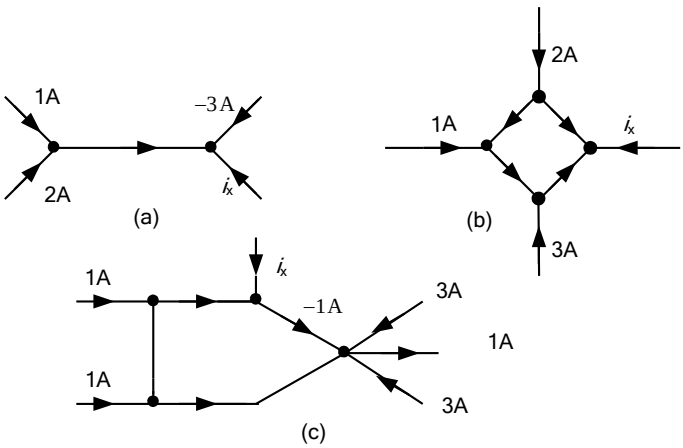

Figure P1-6

1.7 A voltage divider with multiple output voltage selections is shown in fig. P1-7. By using KVL, determine its output voltage for each switching position A,B,C,D,E and E.

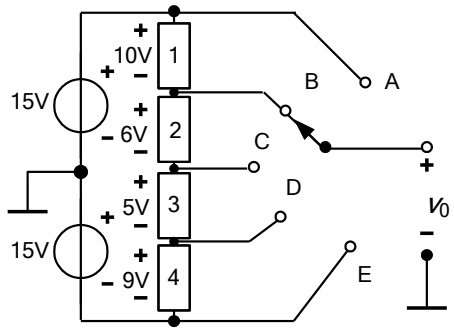

Figure P1-7

1.8 Calculate the voltage across current sources and the current through voltage sources as shown in circuits in fig. P1-1.

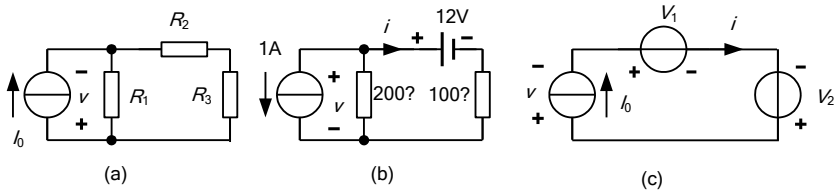

Figure P1-8

1.9 Find v and i in the circuit of figure P1-9.

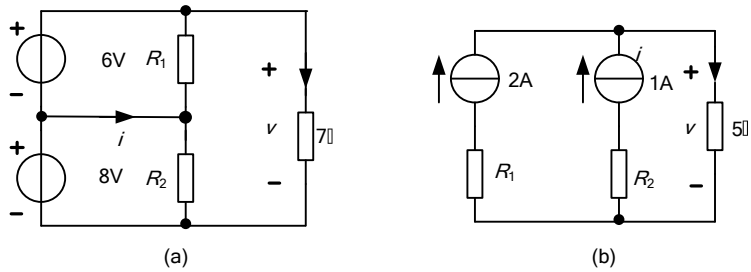

Figure P1-9

1.10 Find the branch currents i_1, i_2 and i_3 in figure P1-10.

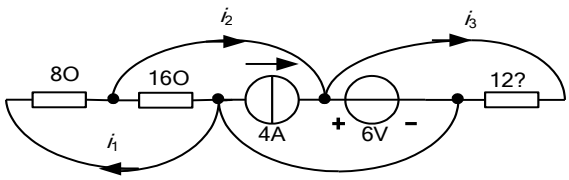

Figure P-10

1.11 Find current i_x and voltage v_x in in the circuits of figure P1-11.

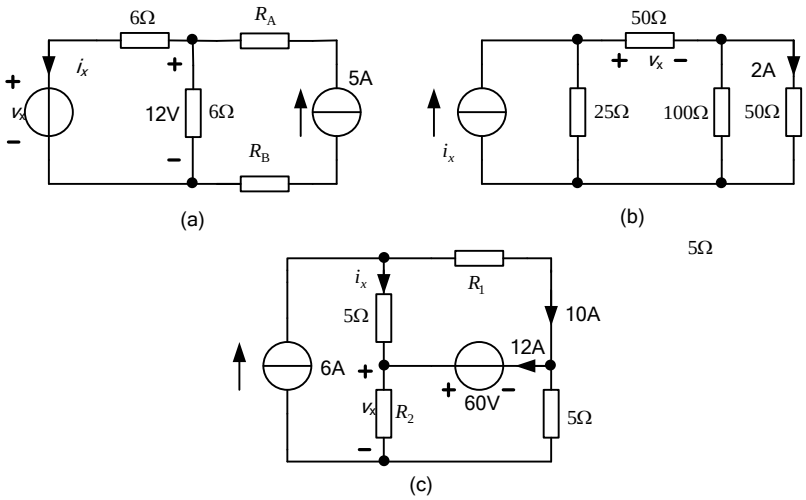

Figure P1-11

1.12 Use inspection method to determine *i*, *v* and the power drawn by element *x* in figure P1-12.

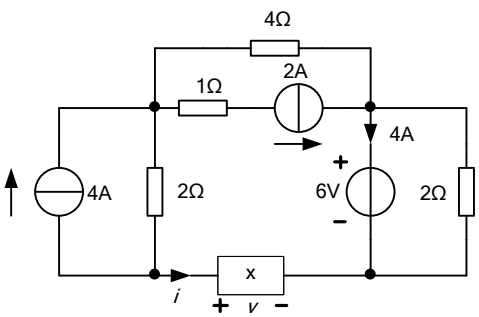

Figure P1-12

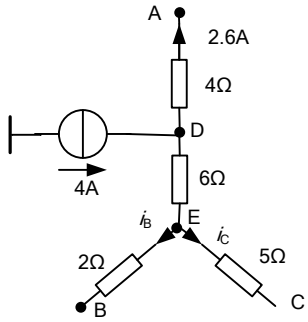

Figure P1-13

1.13 If node A, B and C are connected to ground in the circuit of P1-13, determine the potentials of node D and E, and calculate currents i_B and i_C .

1.14 Find the potentials of node A, B and C for circuits in figure P1-14.

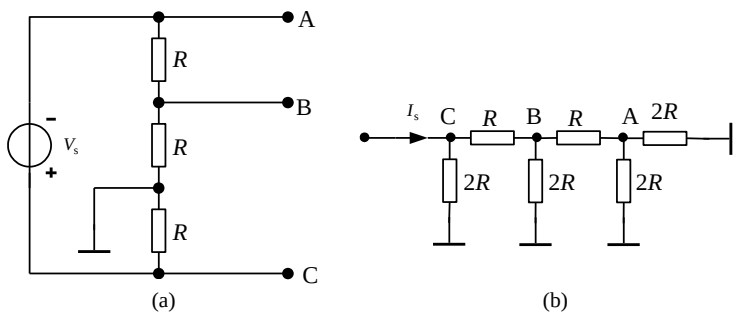

Figure P1-14

1.15 In figure P1-15, the 5-A current source supplies 125W to the rest of the circuit. Find resistance R and conductance G.

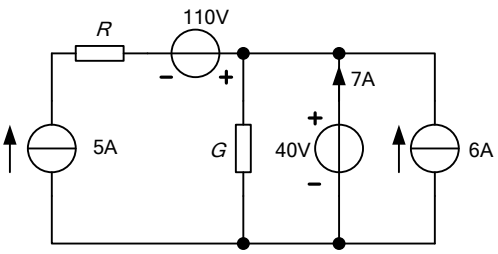

Figure P1-15

1.16 The part of circuit shown in figure P1-16 is a voltage divider.

(1) Find the relation of v_1 to v_2 when i_1 =0.

(2) Find the relation of v_1 to v_2 when i_2 =0.

(3) Find the relation of i_1 to i_2 when v_1 =0.

(4) Find the relation of i_1 to i_2 when v_2 =0.

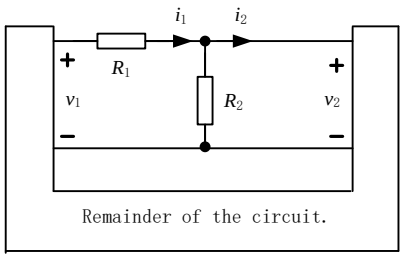

Figure P1-16

1.17 In figure P1-17, the resistor pack consists of three resistors, and is used together with an external 12-V voltage source and conducting wires to form a voltage divider giving 6V output v_0. Follow this example to form more dividers to obtain 3V, 4V, 8V and 9V output. Try to change the way the 12V source is connected and the way the pins are wired, and select different nodes to output voltage with respected to ground.

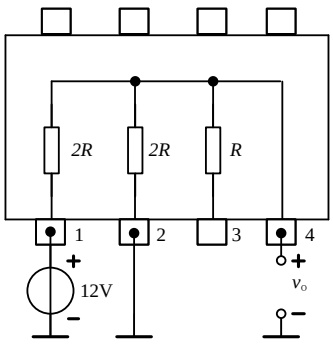

Figure P1-17

1.18 Design a voltmeter with multiple input voltage full scales. In the measuring circuit of figure P1-18, the ammeter allows a maximum current of I_0=50μA and functions like a resistor of $R_0 = 1k\Omega$. How should the resistances for R1, R2, R3 be designed.

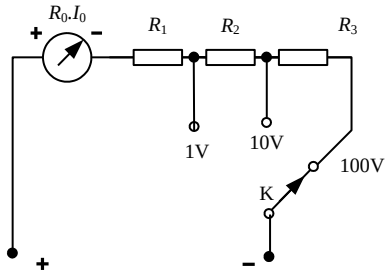

Figure P1-18

1.19 Find v_{ab} in the circuit of P1-19 where both potentiometers have their moving end at the middle position. Use EWB simulation to verify the result.

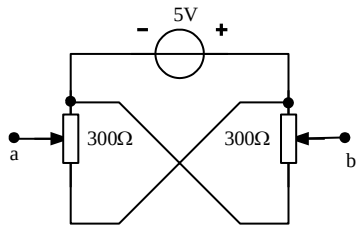

Figure P1-19

1.20 Find i for the circuits in figure P1-20.

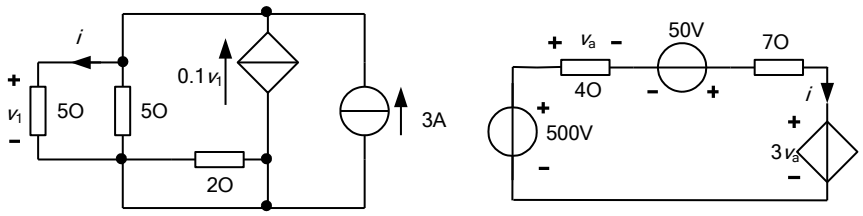

(a) (b)

Figure P1-20

1.21 Calculate the power absorbed by each element in figure P1-21.

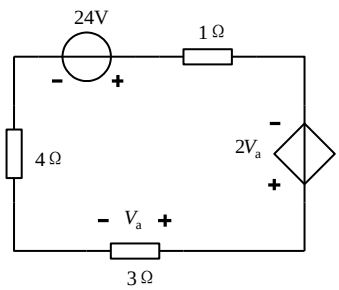

Figure P1-21

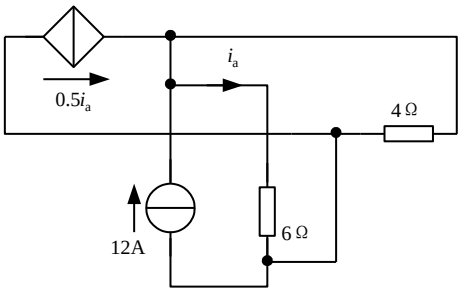

Figure P1-22

1.22 Find i_a in P1-22.

Chapter 2 Exercises

2.1 Find V_0 in figure P2-1, making use the linearity property of the circuit.

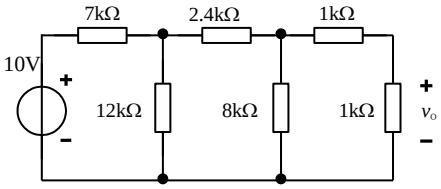

Figure P2-1

2.2 Use superposition principle to obtain I_0 in figure P2-2.

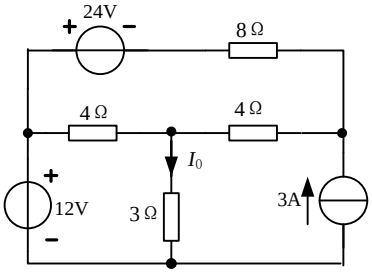

Figure P2-2

2.3 If the voltage of the 48V source drops to 24V, find the change caused in current i_2.

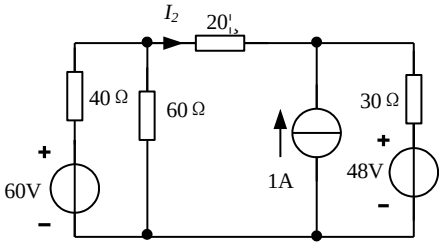

Figure P2-3

2.4 Find I_X in figure P2-4 by using superposition.

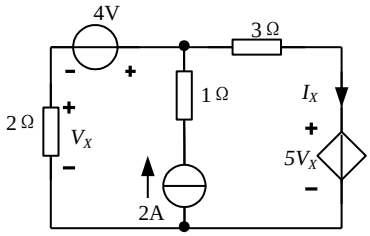

Figure P2-4

2.5 In the circuit of figure P2-5, N_0 is a linear passive network with unknown circuit structure. Given the following measurement results:

$V_s = 5$ V, $I_s = 2$ A, $I_2 = 1$A; and

V_s=2V, I_s=4A, I_2=2A..

Determine I_2 when V_s=1V and I_s=1A.

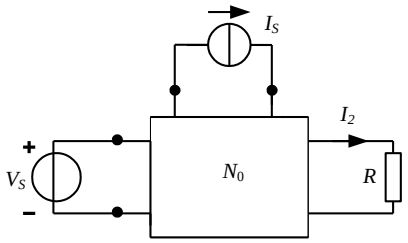

Figure P2-5

2.6 For the circuits in figure P2-6, find equivalent resistor R_{ab}.

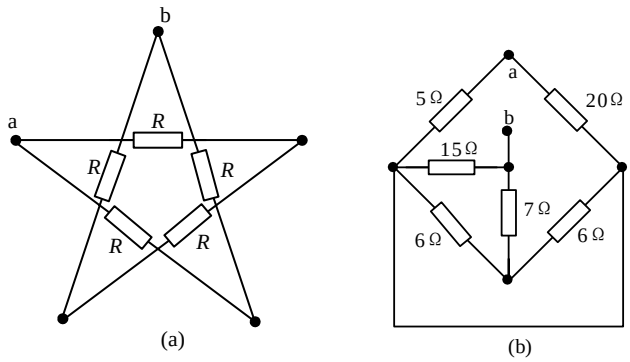

Figure P2-6

2.7 Figure P2-7 shows an R-2R type resistor pack. Various equivalent resistors can be obtained by properly connecting its lead pins. All but one of the following resistance values are available : R/2，2R/3，R，8R/3，5R/3，2R，3R，4R . Find the value that is **not** available and draw the connections for other values.

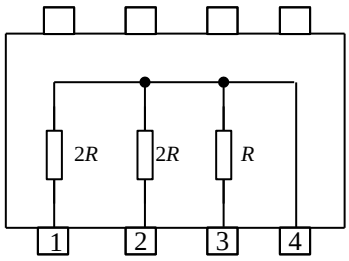

Figure P2-7

2.8 Find an equivalent circuit containing just one resistor and one independent source for each of the circuits in figure P2-8.

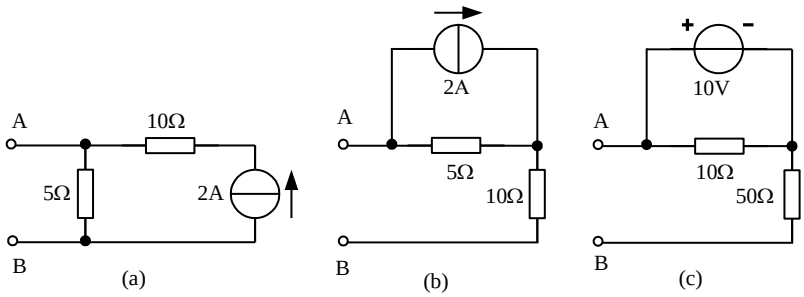

Figure P2-8

2.9 Simplify the circuits in figure P2-9.

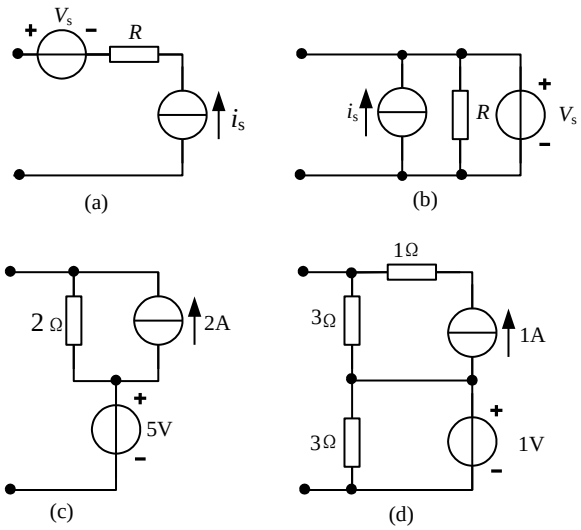

Figure P2-9

2.10 The *v*-*i* relationship for the two-terminal circuit in figure P2-10(a) is shown in figure P2-10(b). Find the equivalent circuit for the two-terminal circuit.

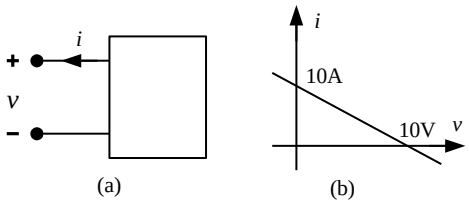

Figure P2-10

2.11 Find v_X and i_X in figure P2-11 by simplifying the circuit to its equivalent.

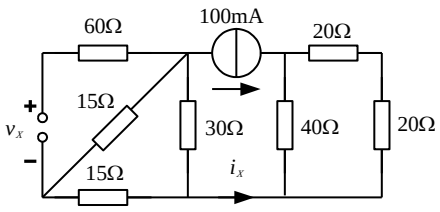

Figure P2-11

2.12 The input resistor R_{IN} is 200 Ω for the circuit in figure P2-12(a).

(1) Explain why there must be an active element (dependent source) inside the block N in

fig.(a).

(2) Assume the block N consists elements as shown in fig.(b). If R=20Ω, determine the value of β such that R_{IN} = 200 Ω .

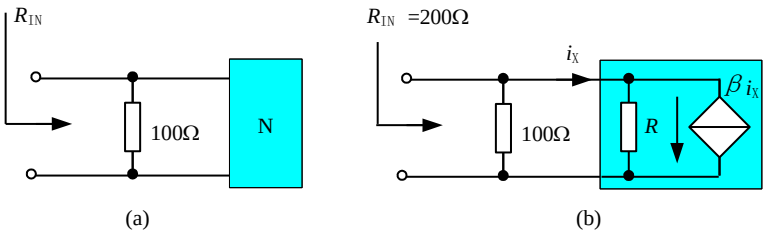

Figure P2-12

2.13 Use circuit transformation to find the equivalent circuit for the circuit in fig. P2-13.

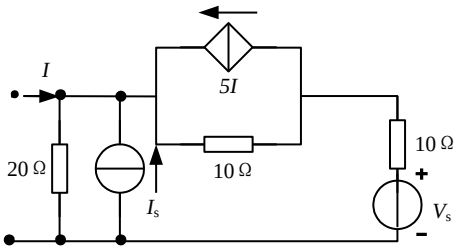

Figure P2-13

2.14 Find the input resistors for the circuits in fig. P2-14.

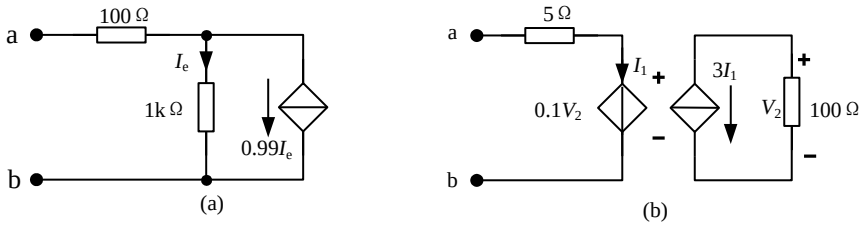

Figure P2-14

2.15 Use Tee-Pai transformation to find the equivalent resistors for the circuits in fig. P2-15. The resistance of all resistors is 1Ω.

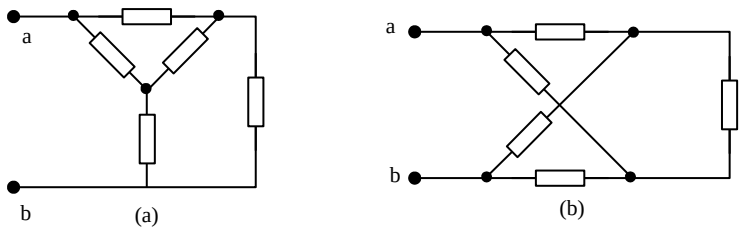

Figure P2-15

2.16 For the circuit in figure P2-16, prove that $v_0 = v_s / 2$ by using Y—Δ transformation.

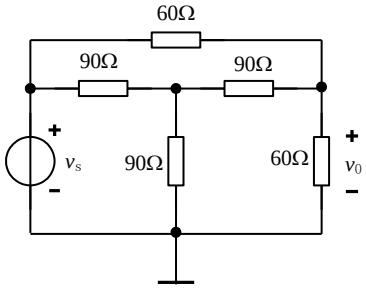

Figure P2-16

2.17 For the circuit in figure P2-17

(1) Find its Thevenin equivalent circuit.

(2) Calculate the power absorbed by a 10Ω resistor connected to the terminals A and B.

(3) Connect the positive terminal of a 5V voltage source to A and the negative end to B. Calculate the power delivered to this source.

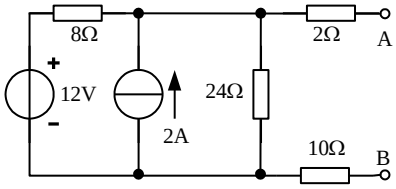

Figure P2-17

2.18 For the circuit in figure P2-18, the voltage v_2 is 12.5V. If terminal a and b are short-circuited, the short-circuit current from a to b is I_{SC}=10mA. Find the equivalent circuit of N seen at a-b terminals.

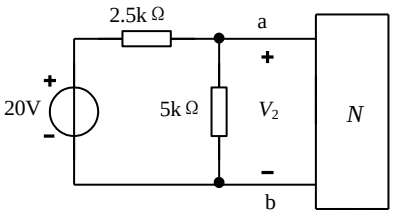

Figure P2-18

2.19 Find the Thevenin equivalent circuit for the circuit in figure P2-19.

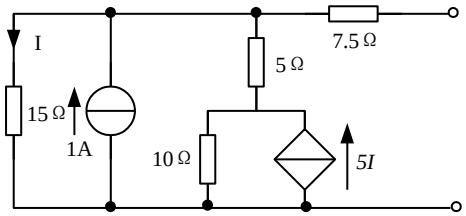

Figure P2-19

2.20 The circuit in fig. P2-20 is a simplified model of inverting operational amplifier.

(1) Find the Thevenin equivalent looked to the left by load resistor R_L.

(2) If the constant A of dependent source approaches infinity, what will happen to the the resultant Thevenin equivalent circuit and to the voltage v_d ?.

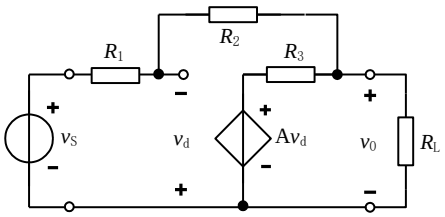

Figure P2-10

2.21 For the circuits in figure P2-11, determine the resistance of load resistor R_L such that it draws maximum power from the circuit, and find this maximum power.

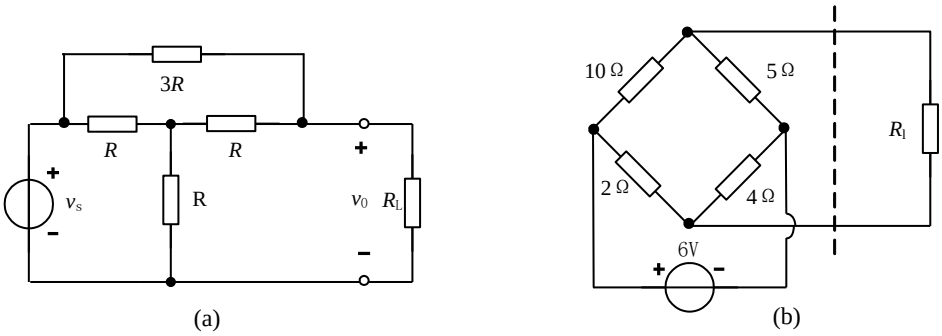

Figure P2-21

2.22 For the circuit in figure P2-22, find a load R_L that draws maximum power from the circuit, and calculate this maximum power.

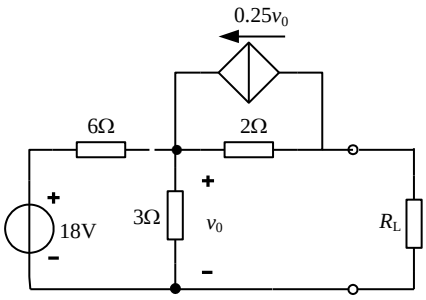

Figure P2-22

2.23 The node equations for a circuit are as following. Draw a circuit that satisfies the equations.

$$1.6V_1 - 0.5V_2 - V_3 = 1$$
$$-0.5V_1 + 1.6V_2 - 0.1V_3 = 0$$
$$-V_1 - 0.1V_2 + 3.1V_3 = 0$$

2.24 Use nodal analysis to find V_a, V_b and V_c for the circuit in figure P2-24.

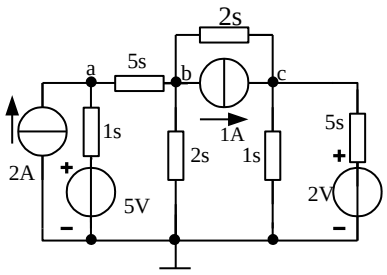

Figure P2-24

2.25 Use nodal analysis to find v_A and v_B in figure P2-25.

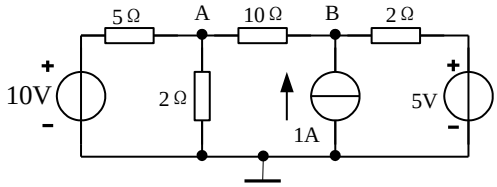

Figure P2-25

2.26 For the circuit in figure P2-26 , find v_X and i_X using nodal analysis, and calculate the power supplied by v_{S1}.

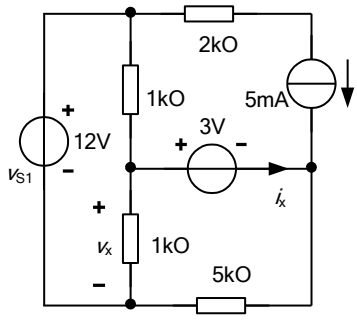

Figure P2-25

2.27 Find V_0 in the circuit of figure P2-27 using node analysis.

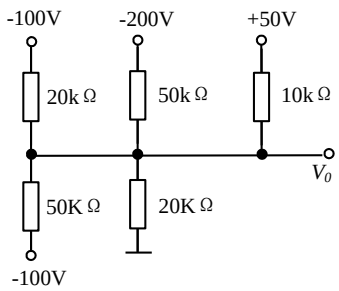

Figure P2-27

2.28 Use mesh analysis to find currents I_1, I_2 and I_3 in figure P2-28.

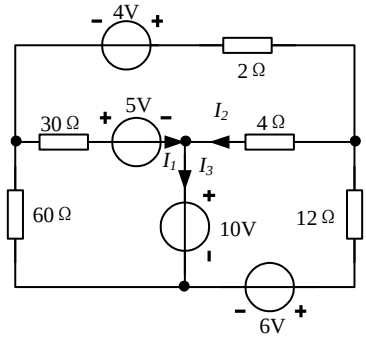

Figure P2-28

2.29 Use mesh analysis to repeat the calculations in problem 2.26.

2.30 Draw a circuit that satisfies the following mesh equations.

$$\begin{cases} 10I_1 - 5I_2 = 10 \\ -5I_1 + 10I_2 - I_3 = 10 \\ -I_2 + 10I_3 = 10 \end{cases}$$

2.31 Use mesh analysis to find V_1 and V_2 in figure P2-31.

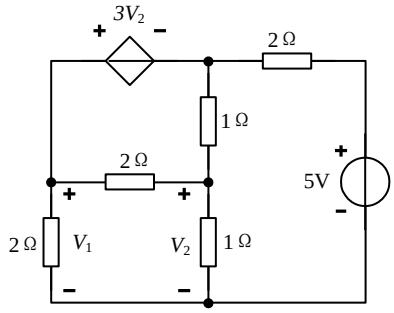

Figure P2-31

2.32 Use both nodal and mesh analysis to find I_A and the power of the dependent source in the circuit of figure P2-32.

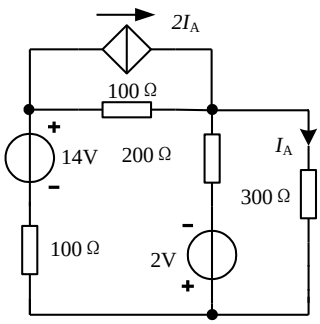

Figure P2-32

2.33 Use nodal or mesh analysis to find V_A and I_B in figure P2-33.

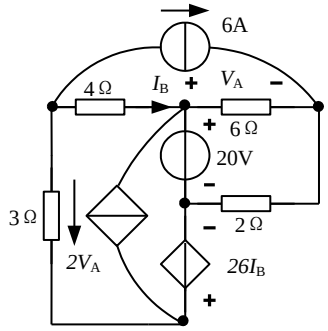

Figure P2-33

2.34 For the circuit of figure P2-34

(1) Find the relation of v_o to v_{s1} and v_{s2} .

(2) Determine v_o if v_{s1} = 6V and v_{s2} = 3V..

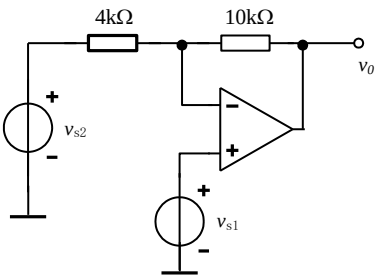

Figure P2-34

2.35 For the circuit of figure P2-35

(1) Show that, looked to the left by the resistor R_L, the two-terminal circuit serves as a current source with a constant current $i_L = \dfrac{v_S}{R}$, irrelative of the resistance of R_L , provided the resistance value is restricted to certain range.

(2) Use EWB simulation to verify the above conclusion. Let v_S =5V and $R = 5k\Omega$, and let R_L vary in the range of $1-10k\Omega$. Plot i_L with respect to R_L, and explain why the plot can not maintain constant when the resistance of R_L exceeds a certain value.

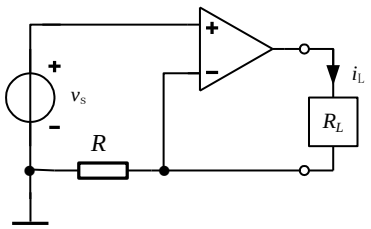

Figure P2-35

2.36 For the circuit of figure P2-36

(1) Find the relation of v_o to v_s .

(2) If v_S =1.5V, compute the power supplied by voltage source and the power delivered to the 5-kΩ load resistor.

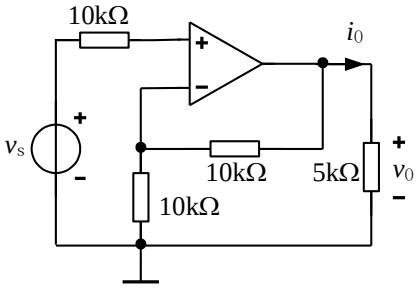

Figure P2-36

2.37 For the circuit in figure P2-37, use nodal analysis to find the voltage gain v_o /v_s, and use EWB simulation to verify the result.

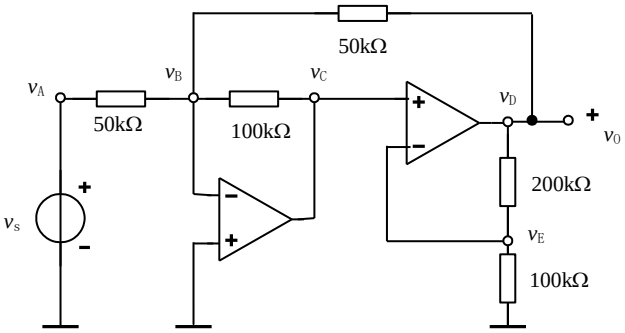

Figure P2-37

2.38 For the circuit in figure P2-38

(1) Use nodal analysis to find the voltage gain v_o /v_i.

(2) Find the input resistor seen by the voltage source v_i.

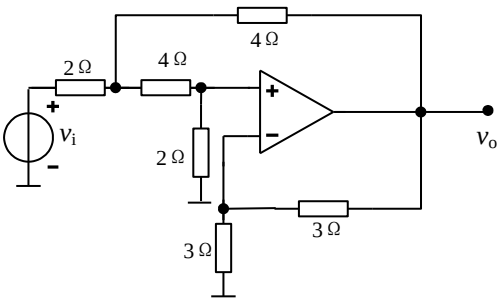

Figure P2-38

Chapter 3 Exercises

3.1 The waveform of voltage across a 30μF capacitor is shown in figure P3-1.

(1) Draw the waveform of current flowing through the capacitor.

(2) Draw the waveforms of power $p(t)$ and energy $w(t)$ for the capacitor.

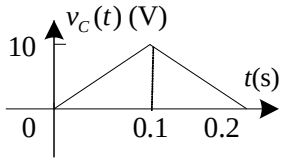

Figure P3-1

3.2 The waveforms of the two currents through a 30-μF capacitor are shown in figure P3-2. Draw the waveforms of corresponding voltages across the capacitor.

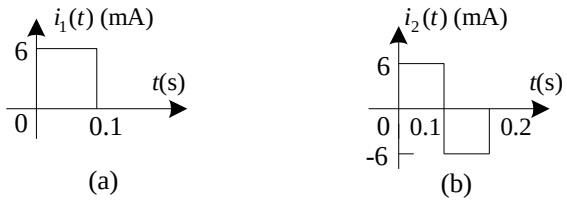

Figure P3-2

3.3 Draw $v(t)$ waveforms for the following currents through a inductor of L=2mH.

(1) $i(t) = 4t + 2$ (A)

(2) $i(t) = 6\,\mathrm{e}^{-2t}$ (A)

(3) $i(t) = 4\cos 10t$ (A)

(4) 6 (A)

3.4 Write differential equations for specified variables in figure P3-4 for t>0.

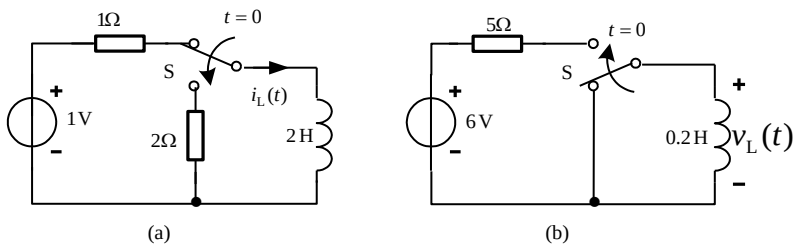

Figure P3-4

3.5 Write differential equations for specified variables in figure P3-5 for t>0.

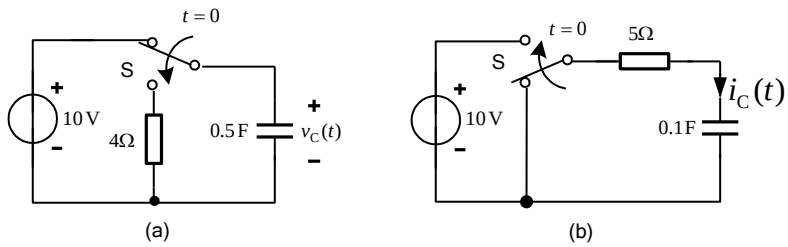

Figure P3-5

3.6 The circuit in figure P3-6 is valid for t>0.

(1) Write differential equations for v and i for t>0.

(2) Determine v and i for t>0 if $v_s = 3\text{V}$ and $v(0^+) = 0$.

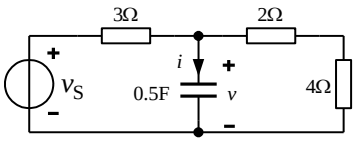

Figure P3-6

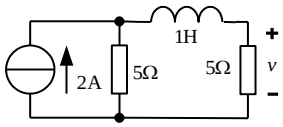

Figure P3-7

3.7 Figure P3-7 shows a circuit for t>0.

(1) Write the differential equation for v.

(2) Find $v(t)$ if $v(0^+) = 5\text{V}$.

3.8 Given $i_1(0^+) = 2\,\text{A}$ and $v_C(0^+) = 4\,\text{V}$ for the circuit in figure P3-8, find values of the specified variables for $t = 0^+$ and $t = \infty$.

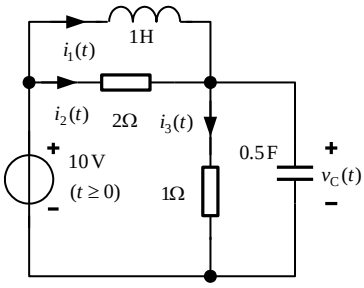

Figure P3-8

3.9 For the circuit in figure P3-9, find initial values $i_{L1}(0^+)$, $i_{L2}(0^+)$ and final values $i_{L1}(\infty)$, $i_{L2}(\infty)$.

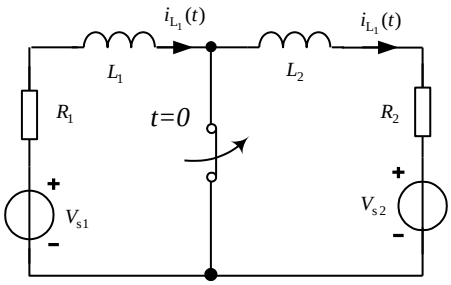

Figure P3-9

3.10 The circuits in figure P3-4 have been in steady state before the switching action at t=0. Determine initial values and solve differential equations for time functions for the specified variables.

3.11 The circuits in figure P3-5 have been in steady state before the switching action at t=0. Determine initial values and solve differential equations for time functions for the specified variables.

3.12 If the switch in figure P3-12 has been open for a long time and is closed at t = 0, find $i_R(0^+)$,

$i_L(0^+)$, $i_R(\infty)$ and $i_L(\infty)$, and then write the expressions $i_R(t)$ and $i_L(t)$.

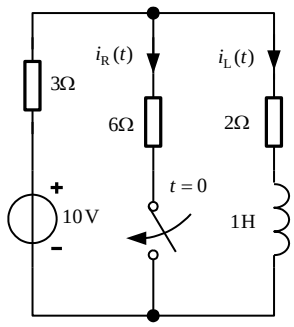

Figure P3-12

3.13 The circuit in figure P3-13 has been in steady state before the switching action at t=0. Find $i_L(t)$ for t>0.

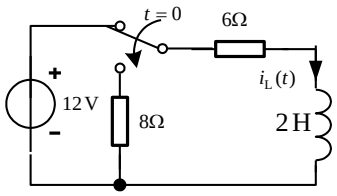

Figure P3-13

3.14 The switch in figure P3-14 has been closed for a long time and is opened at t = 0. Find

(3) $i_1(0^-)$ and $i_2(0^-)$.

(4) $i_1(0^+)$ and $i_2(0^+)$.

(5) $i_1(t)$ for t>0.

(6) $i_2(t)$ for t>0.

(7) Explain why $i_2(0^-) \neq i_2(0^+)$.

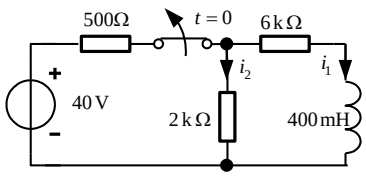

Figure P3-14

3.15 The circuit for t>0 is shown in figure P3-15. Find $v_C(t)$ if $v_C(0^+)$ =0.

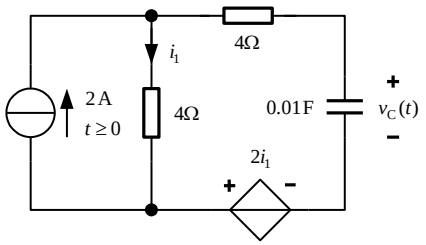

Figure P3-15

3.16 The circuit in figure P3-16 has been in steady state before the switching action. Find $v(t)$ and $i(t)$ for t>0.

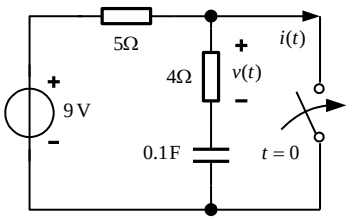

Figure P3-16

3.17 The switch in figure P3-17 has been in position 1 for a long time and moves to position 2 at t=0. Find $i_0(t)$ for t>0.

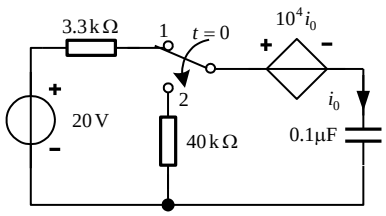

Figure P3-17

3.18 For the circuit of figure P3-18, if $i_L(t) = -2e^{-20t} + 1$ A for t>0, find $i_L(0)$, R and L.

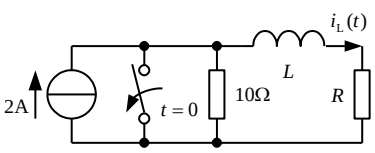

Figure P3-18

3.19 The circuit in figure P2-19 is in steady state when node a and b are suddenly short-circuited at t=0. For the current i_{ab} flowing through short-circuit wire, find

(1) Initial value $i_{ab}(0^+)$.

(2) Final value $i_{ab}(\infty)$.

(3) Time needed for i_{ab} to rise to 114A.

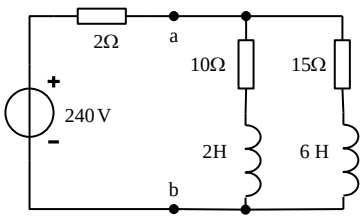

Figure P3-19

3.20 In figure P3-20, $v_C(t) = 1.5e^{-at} + 0.5\text{ V}$ for t>0 if $v_s = 1\text{V}$. Find i_C(t) for t>0 if v_S=2V.

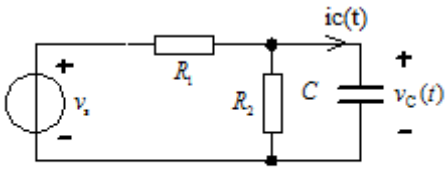

Figure P3-20

3.21 In figure P3-21, the response v_C is $v_C(t) = 2e^{-t} - 3e^{-2t} + 1\text{ V}$ for t>0. If the source changes to v_S=2V, v_C will become $v_C(t) = -2e^{-2t} + 2\text{ V}$ for t>0. Determine the transient and steady state responses of v_C for v_S=1V.

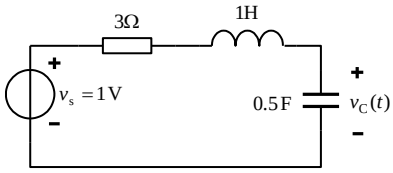

Figure P3-21

3.22 The switch in figure P3-22 has been in position *a* for a long time and moves to position *b* at *t*=0. For *t*>0 :

(1) Find zero-input and zero-state responses for $i_0(t)$ and $v_0(t)$.

(2) Find transient and steady state responses for $i_0(t)$ and $v_0(t)$.

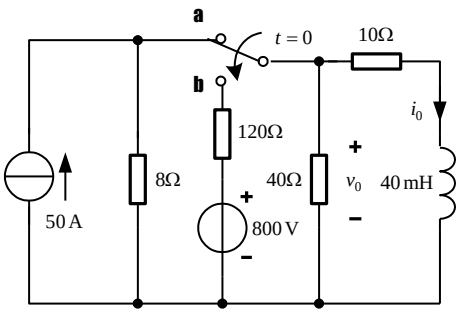

Figure P3-22

3.23 Express the following signals in terms of step functions .

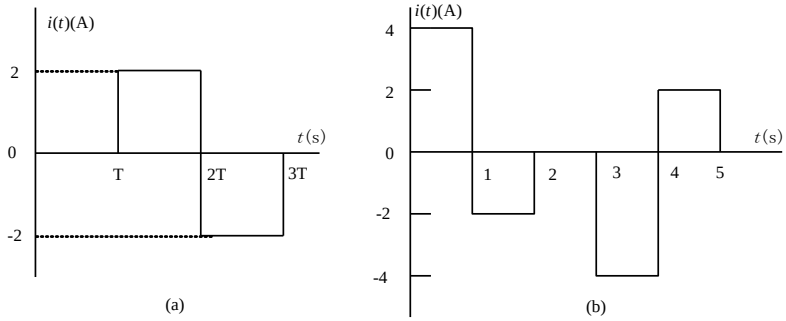

Figure P3-23

3.24 The voltage $v_S(t)$ in the circuit of figure P3-24(b) is a pulse signal as shown in figure P3-24(a). Find $i_L(t)$.

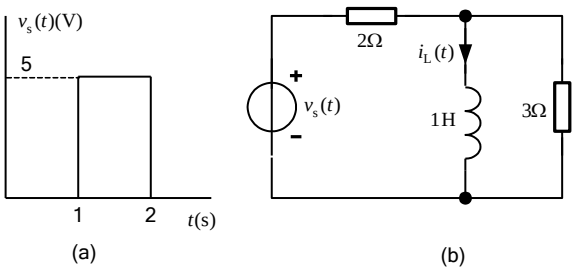

Figure P3-24

3.25 For the circuit in figure P3-25(a),

(1) Find the step response of i(t).

(2) Find the zero-state response of i(t) when the circuit is excited by v_S in figure P3-25(b).

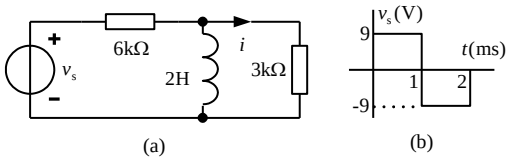

Figure P3-25

3.26 In figure P3-26, when the voltage across the light rise to 15V, the light turns on and is equivalent to a 10-kΩ resistor. Once the light is on, it will turn off only when the voltage across the light falls below 5V. When it turns off, it is equivalent to an open circuit. Assume the circuit has been working for a long time, and suppose the light turns off at t=0.

(1) Find the expression of voltage across the light for one cycle.

(2) Determine how many times the light turns on in one minute.

(3) Use EWB simulation to find a resistor to replace the 800-kΩ resistor so that the light turns on exactly 12 times per minute.

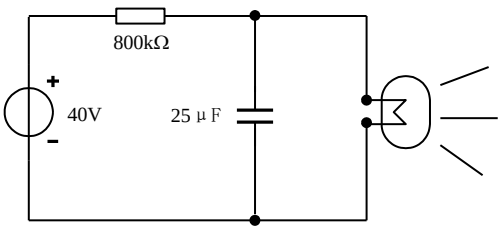

Figure P3-26

3.27 For the circuits in figure P3-27

(1) Write differential equations for variables $v_C(t)$ and $i_L(t)$.

(2) Solve for $v_C(t)$ and $i_L(t)$ if $v_C(0^+)$=5V and $i_L(0^+)$=0.

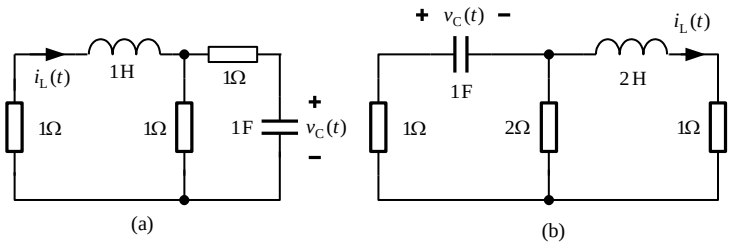

Figure P3-27

3.28 For the circuit in figure P3-28，find $v_C(t)$ if $v_C(0^+)$=1V, $i_C(0^+)$=2A, L=1/4 H, C=1 F. Use the following resistor values respectively:

(1) R=1/5Ω.

(2) R=1/4Ω.

(3) R=1/2Ω

(4) $R\rightarrow\infty$

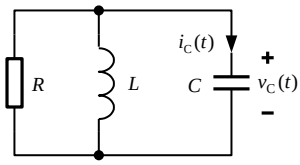

Figure P3-28

3.29 For a source-free parallel RLC circuit

(1) If R=2000Ω, L= 250mH and C=10nF, find natural frequencies and indicate the nature of response for the circuit (overdamped, critically damped, or underdamped).

(2) Find R that results in a damped natural frequency of ω_d=12krad/s.

(3) Find R that results in a critically damped response.

3.30 The circuit in figure P3-30 has critically damped response for t>0. Given $v_C(0^+)$=15V, $i_L(0^+)$=6mA,

(1) Determine R.

(2) The initial values of $i(t)$ and di/dt.

(3) Find $v_C(t)$ for t>0.

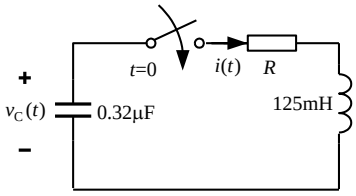

Figure P3-30

3.31 Find zero-state response of $v_C(t)$ for t>0 in the circuit of figure P3-31.

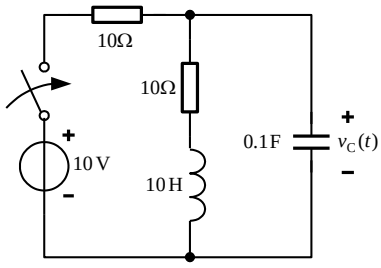

Figure P3-31

3.32 Find $v_0(t)$ for t>0 in the circuit of figure P3-32. Assume the circuit does not have initial energy storage.

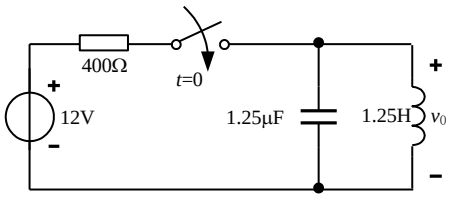

Figure P3-32

3.33 The circuit of figure P3-33 has been in steady state and then the source voltage changes suddenly to 250V at t=0. Find $v_C(t)$ for t>0.

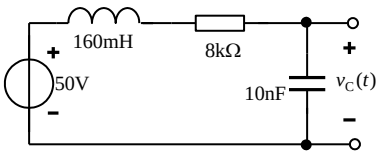

Figure P3-33

Chapter 4 Exercises

4.1 For the waveforms of sinusoidal v(t) and i(t) in figure P4-1, write their time expressions in sine form.

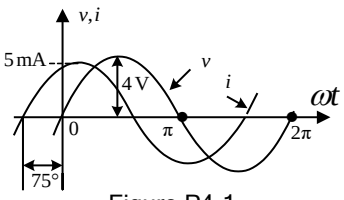

Figure P4-1

4.2 Given the sinusoidal voltage across two nodes *a* and *b* as $v_{ab} = 311\cos(314t + \pi/3)$ V

(1) Find its amplitude, phase, period and frequency.

(2) Find $v_{ab}(0)$ and $v_{ab}(0.01)$, and indicate actual voltage polarity of v_{ab} at t=0 and t=0.01s.

(3) write $v_{ba}(t)$ in sine form.

(4) Draw the waveform of $v_{ab}(t)$.

4.3 Two sinusoids *v* and *i* are of the same frequency *f*=50Hz, and V_m=100V, I_m=2A, and *v* leads *i* by T/6.

(1) Calculate the phase difference between *v* and *i* in radians.

(2) Use *v* as phase reference, write *v* and *i* in sine form.

(3) Use *i* as phase reference, write *v* and *i* in sine form.

4.4 Find phasors for following sinusoids. Draw a phasor diagram and compare their phase relationship.

$$v_1(t) = 220\sqrt{2}\cos\omega t \text{ V}$$
$$v_2(t) = 220\sqrt{2}\cos(\omega t - 120^\circ) \text{ V}$$
$$v_3(t) = 220\sqrt{2}\cos(\omega t + 120^\circ) \text{ V}$$

4.5 Given angular frequency ω=10 rad/s, find the sinusoids corresponding to each of the following phasors, and calculate $v_1(t)+v_2(t)$ and $i_1(t)+i_2(t)$ using phasors.

(1) $\dot{V}_1 = 10\angle -30°$ (2) $\dot{V}_2 = 60\angle 140°$

(3) $\dot{I}_1 = 5\text{j}$ (4) $\dot{I}_2 = 2$

4.6 Use phasor diagram to find the sums of sinusoids of the following.

(3) Find $i(t) = i_1(t) + i_2(t)$ for

$i_1(t) = 3\cos(\omega t)$ mA, $i_2(t) = 4\cos(\omega t - 90^\circ)$ mA

(4) Find $i(t) = i_1(t) + i_2(t)$ and $i(t) = i_1(t) - i_2(t)$ for $i_1(t) = 10\cos(314t)$ A and

$i_2(t) = 10\cos(314t - 120^\circ)$ A

(5) If $v_1(t) = 4\cos(\omega t)$ V , $v_2(t) = 7\cos(\omega t + 90^\circ)$ V and

$v_3(t) = 3\cos(\omega t - 90^\circ)$ V ,find $v(t) = v_1(t) + v_2(t) + v_3(t)$.

4.7 Given a phasor $\dot{V}_1 = -3 + \text{j}4(\text{V})$ and angular frequency ω, find a sinusoid $v_2(t)$ that leads $v_1(t)$ by $90°$ and has an amplitude of 10V.

4.8 A voltage $v(t) = 2\cos\omega t(\mathrm{V})$ is applied to a 10-mH inductor. Find the steady-state current flowing through the inductor for the following frequencies

(3) f=465kHz.

(4) f=2kHz.

4.9 Find the equivalent impedance Z for the circuit in figure P4-9. Give both rectangular and polar forms.

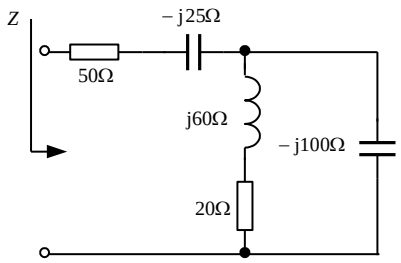

Figure P4-9

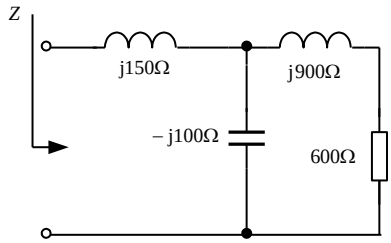

Figure P4-10

4.10 Find the equivalent impedance Z for the circuit of figure P4-10.

4.11 A voltage source $v(t) = 200\cos(1000t + 45°)$ V is applied to a linear passive two-terminal circuit and causes a steady-state current of $i(t) = 20\cos 1000t$ mA.

(1) Determine the input impedance of the circuit.

(2) Find steady-state current if the applied voltage becomes $v(t) = 150\cos(1000t + 90°)$ V.

4.12 If the two circuits in figure P4-12(a) and (b) are equivalent, find the relationships between r_c, x_c and G_c, B_c.

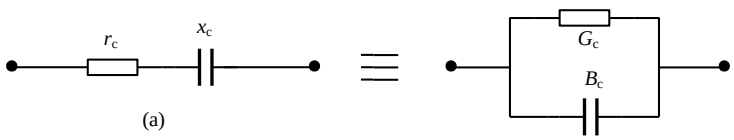

Figure P4-12

4.13 The circuit of figure P4-13 works in sinusoidal steady state. Given ω=5krad/s, calculate the value of C such that the input impedance Z of the circuit is purely resistive, and find Z.

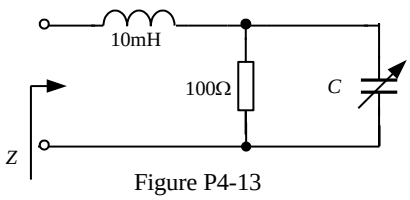

Figure P4-13

4.14 In figure P4-14, $i_S = \cos 10^6 t$ (mA), $R = 10\ \mathrm{k}\Omega$, $L = 1$ mH

(1) Calculate the value of C such that v and i_S are in phase.

(2) Use virtual instruments and AC frequency sweep of EWB simulation to verify the result.

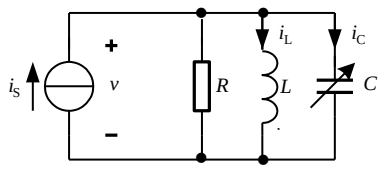

Figure P4-14

4.15 In the sinusoidal steady-state circuit of figure P4-15, the AC voltmeters read V=15 V and V_1=10 V. Find the reading of V_2.

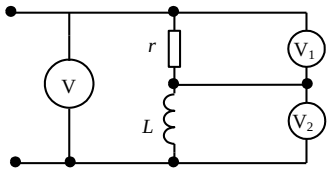

Figure P4-15

4.16 The circuit of figure P4-16 works in sinusoidal steady-state, with working frequency f=50Hz, r = 8Ω, R=10Ω. The readings of the two AC voltmeters are equal. Determine the value of L.

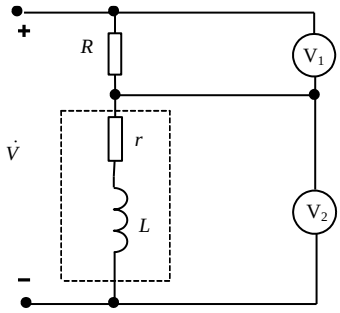

Figure P4-16

4.17 In figure P4-17, $v_1(t) = 5\sqrt{2}\cos(2\pi\times 168\times 10^3 t)$ V, and the magnitude of the input impedance is $100\sqrt{5}\,\Omega$. Find the value of R and C if the phase difference between v_2 and v_1 is $60°$.

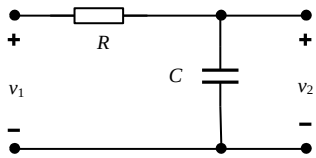

Figure P4-17

4.18 For the RLC series circuit of figure P4-18, find the phasors $\dot{I}, \dot{V}_L, \dot{V}_C$, and draw a phasor diagram if when R=30Ω，L=0.01H，C=10F，V=10V，ω=2000rad/s.

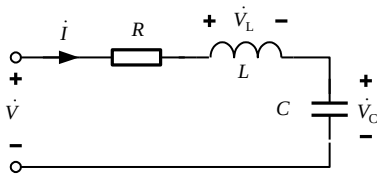

Figure P4-18

4.19 An RLC series circuit works in sinusoidal steady state. At some signal frequency f, the effective values of the voltage across the three elements are V_R=3V, V_L=6V, V_C=2V. Find V_L, V_C and V if signal frequency becomes $f/2$ but V_R remains 3V.

4.20 In figure P4-20, the effective values for the specified variables are V=100V, I_L=10A and I_c=15A , and $\dot{V}$ leads $\dot{V}_{ab}$ by π/4. Find R, X_C and X_L.

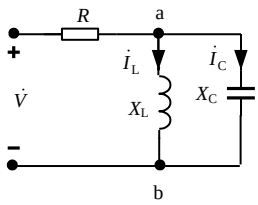

Figure P4-20

4.21 For the phasor circuit of figure P4-21, use the following two methods to find $\dot{V}_x$.

(4) Find the equivalent circuit of the part to the left of a-b.

(5) Use the linearity property.

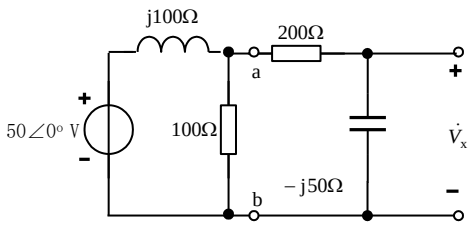

Figure P4-21

4.22 Use superposition to obtain steady-state response of v_x in figure P4-22. Take ω=5×10^{4}rad/s and use phasors.

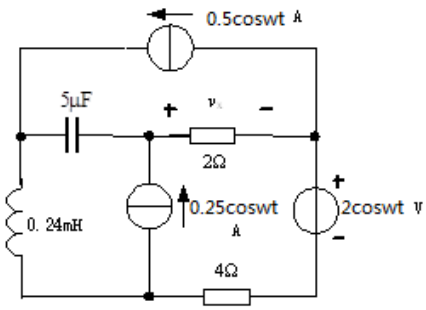

Figure P4-22

4.23 Find Thevenin equivalent of the phasor circuit in figure P4-23.

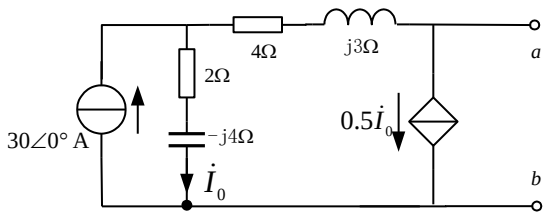

Figure P4-23

4.24 In figure P4-24, the current phasor is $\dot{I} = 3.6 - \mathrm{j}4.8\mathrm{mA}$ when Z_L=0, and $\dot{I} = 10 - \mathrm{j}0\mathrm{mA}$ when $Z_L = -\mathrm{j}40\Omega$. Determine the Thevenin equivalent of the source circuit.

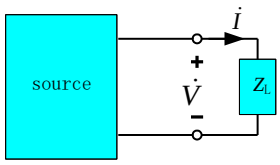

Figure P4-24

4.25 Use phasor nodal analysis to find the steady-state response $v_x(t)$ for the circuit of figure P4-25.

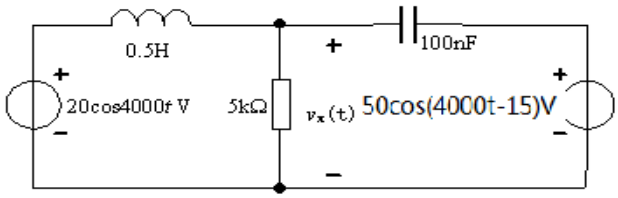

Figure P4-25

4.26 Use phasor nodal analysis to find the steady-state response $i_x(t)$ for the circuit of figure P4-26.

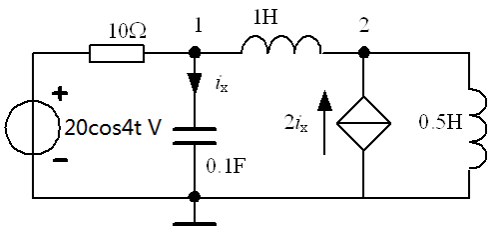

Figure P4-26

4.27 Use phasor nodal analysis to find the steady-state output $v_0(t)$ for the circuit in figure P4-27.

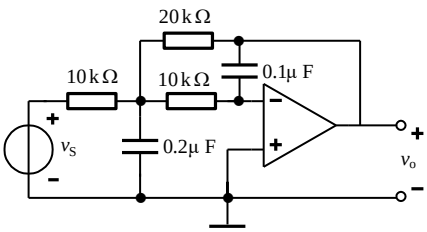

Figure P4-27

4.28 Use mesh analysis to find $\dot{I}$ and $\dot{V}$ for the phasor circuit in figure P4-28.

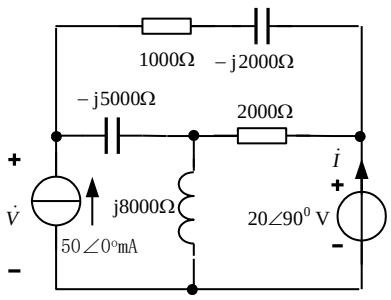

Figure P4-28

4.29 Use phasor mesh analysis to find steady-state $i(t)$ for the circuit in figure P4-29. Take $v_s = 6\cos(3000t)$ V.

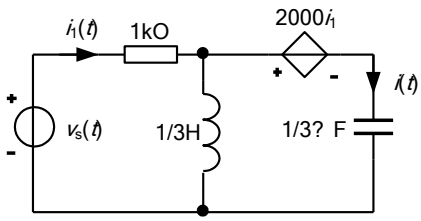

Figure P4-29

4.30 Use nodal or mesh analysis in phasor domain to find steady-state $v(t)$ for the circuit in figure P4-30. Take $v_s(t) = 5\cos(2t - 45^0)$ V.

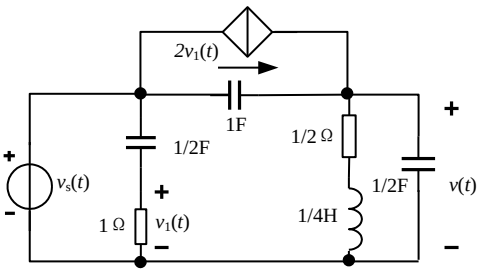

Figure P4-30

4.31 A current $i = 4\sqrt{2}\cos(\omega t + \pi/3)$ A flows through a two terminal passive circuit with an input equivalent impedance of Z=20+j25Ω. Find the complex, average and reactive powers of the circuit.

4.32 Find P, Q, S and power factor λ for the circuit of figure P4-9 if the effective value of the input voltage is 2V.

4.33 In the phasor circuit of figure P4-33, V_{ab}=100V, I_2=8A, r_2=9Ω, $|X_C|$=12Ω, and the total

average power is 1000W. Find r_1 and X_L.

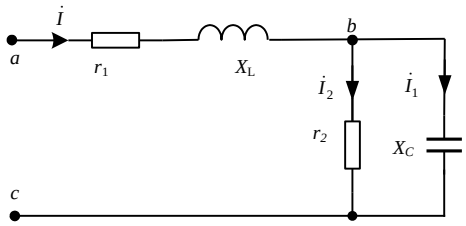

Figure P4-33

4.34 A feeder line supplies an industrial load with 220-V 50-Hz AC voltage. The load consists of 5 motors (1.7-kW each) of 0.8 power factor (inductive) and 200 lamps (40-W each) (resistive).

(1) Calculate the total current, average power and power factor of the load.

(2) Find the value of the capacitance C that must be connected across the load to raise the power factor to unity.

4.35 In the circuit of figure P4-35, an actual source consisting of $v_s = 10\sqrt{2}\cos 1000t\ V$ and $Z_s = 50 + j62.8\,\Omega$ is connected to a load of RC in parallel.

(1) Determine the impedance of the load that achieves maximum power transfer and find the power.

(2) Calculate the value of R and C to achieve the matching load.

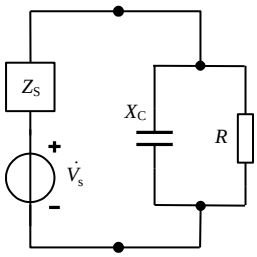

Figure P4-35

4.36 For the circuit of figure P4-36

(1) Find the average power of the load.

(2) Design the element values of the load such that it can draw maximum power.

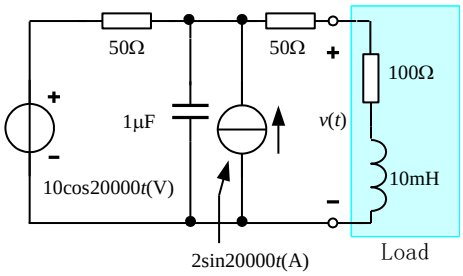

Figure P4-36