Measurement of Moment of Inertia

The motion of a rigid body includes translation and rotation, and the moment of inertia is a physical quantity that determines the rotational characteristics of the rigid body. The moment of inertia of a rigid body is related to its own mass distribution. For a rigid body with uniform mass distribution and simple geometric shape, its moment of inertia can be calculated by formula. In most cases, calculating the moment of inertia is difficult, and in such cases, it is generally measured through experiments. The moment of inertia of a rigid body can be measured using the torsion pendulum method and the constant moment of force method. In this experiment, the constant moment of force method is used to measure the moment of inertia of a rigid body.

Objectives

1. Learn the principle and method of measuring the moment of inertia of a rigid body using the constant moment of force method.
2. Explore the reasons that affect the moment of inertia of a rigid body, and verify the parallel axis theorem.
3. Learn to use the intelligent timing counter.

Apparatus

The apparatus is shown in Fig. 1. It includes an experimental instrument, an intelligent timing counter, a disk, a ring, 2 cylinders, thin lines, weights, a vernier caliper, a balance, and so on.

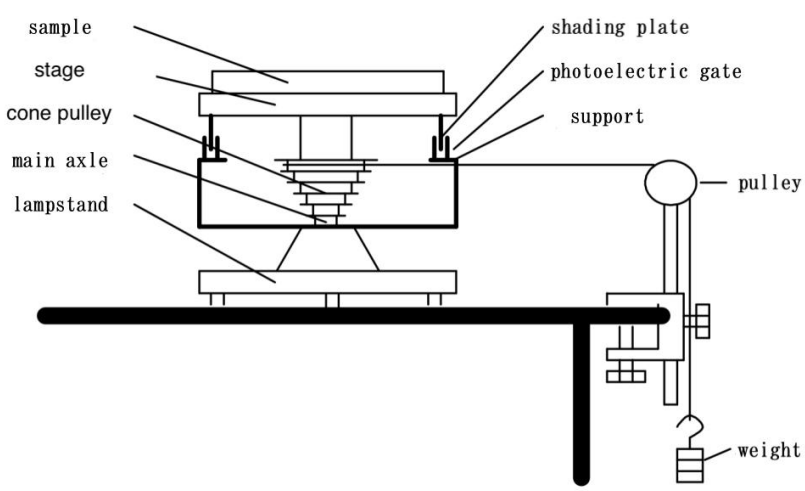

Fig. 1 Experimental device

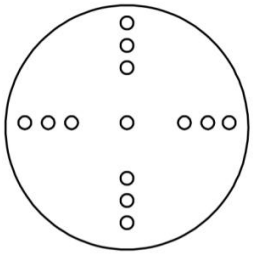

Fig. 2 Top view of stage

As shown in Fig. 1, the winding tower wheel connects the stage. Five tower wheel radii can be combined with five weights to produce different moments. The tested sample has 1 disk, 1 ring, and 2 cylinders. The top view of the stage is shown in Fig. 2. Cylinders

can be inserted into holes on the stage. The distances from these holes to the center are 45, 60, 75, 90, and 105 mm, respectively. This can verify the parallel axis theorem.

Theory

1. The principle of measuring the moment of inertia

The law of fixed axis rotation of a rigid body is

$$M = J\beta \tag{1}$$

M is the moment applied to the rigid body, β is the angular acceleration of the rigid body, and J is the moment of inertia of the rigid body. The moment of inertia of the empty stage is J_1. Under the action of the resistance moment M, the stage will decelerate uniformly with an angular acceleration of β_1. It can be concluded that

$$-M_\mu = J_1\beta_1 \tag{2}$$

Wrap a weight with a mass of m around a tower wheel with a radius of R. Let the weight fall and the system rotate at a constant acceleration. If the acceleration of the weight is a, the tension on the thin wire is $T=m\ (g - a)$. g is the acceleration of gravity, g=9.8m/s^2. If the angular acceleration of the stage is β_2, then $a=R\beta_2$. The torque applied by the thin line to the stage is $TR=m\ (g -R\beta_2)\ R$. It can be concluded that

$$m(g - R\beta_2)R - M_\mu = J_1\beta_2 \tag{3}$$

It is obtained from Eq. (2) and Eq. (3).

$$J_1 = \frac{mR(g-R\beta_2)}{\beta_2-\beta_1} \tag{4}$$

After adding a sample to the stage, the moment of inertia of the system is J_2, and the angular accelerations before and after adding weights are respectively β_3 and β_4. It can be concluded that

$$J_2 = \frac{mR(g-R\beta_4)}{\beta_4-\beta_3} \tag{5}$$

The moment of inertia of the sample is

$$J_3 = J_2 - J_1 \tag{6}$$

Measure R, m and β_1, β_2, β_3, β_4. The moment of inertia of the tested sample can be calculated from Eq. (4), (5), and (6).

2. Measurement of β

In the experiment, an intelligent timer was used to record the number and time of occlusion. The angle between the two light shielding rods at the edge of the stage is π. The photoelectric door is blocked every half turn of the stage, generating a photoelectric pulse, and the counter counts the blocking times k and the corresponding time t. Start

counting from the first light blocking. For any two sets of data (k_m, t_m) and (k_n, t_n) measured during uniformly accelerated rotation, the corresponding angular displacements are θ_m, θ_n.

$$\theta_m = k_m \pi = \omega_0 t_m + \frac{1}{2}\beta t_m^2 \quad (7)$$

$$\theta_n = k_n \pi = \omega_0 t_n + \frac{1}{2}\beta t_n^2 \quad (8)$$

It is obtained from Eq. (7) and Eq. (8).

$$\beta = \frac{2\pi(k_n t_m - k_m t_n)}{t_n^2 t_m - t_m^2 t_n} \quad (9)$$

The angular acceleration can be calculated from Eq. (9).

Contents

1. Preparation

Level the moment of inertia experimental instrument. Adjust the height of the pulley so that the pulley groove and the winding tower pulley groove are at the same height and perpendicular to each other, as shown in Figure 1. Connect the A or B channel of the intelligent timing counter to the photoelectric gate of the moment of inertia experimental instrument.

2. Measure the moment of inertia of the stage J_1

(1) Measurement of β_1

a. Open the time counter and select "time 1-2 multi pulse".

b. Select channel A.

c. Rotate the stage to make it rotate uniformly and decelerate.

d. Press the confirmation key to measure.

e. Press the confirmation key to stop measuring after 5 turns of the stage.

f. Look up data and record the data in Table 1.

(2) Measurement of β_2

1. Select the appropriate cone pulley and weight, attach one end of the thin wire to the weight, and wrap the other end tightly around the cone pulley.

2. Repeat the steps above

In step c, the gravity of the weight causes the stage to rotate uniformly and accelerate.

3. Measure the moment of inertia of the ring J_3

The ring was placed on the stage to measure the angular accelerations β_3 without adding weight and β_4 with adding weight respectively. Record the data in Table 2.

4. Verify the parallel axis theorem

Two small cylinders were placed symmetrically on the stage to measure the angular accelerations β_5 without weight and β_6 with weight respectively. Record the data in Table 3.

Precautions

(1) During the experiment, do not rotate the turntable too fast to prevent the cylinder from falling;

(2) When weighing the mass of the ring, the ring should be placed flat to prevent it from falling.

Data Recording

Table 1 Measure the moment of inertia of stage

Uniform deceleration						Uniform acceleration $R_{cone\ pulley}$= mm m_{weight}= g					
k	1	2	3	4	average	k	1	2	3	4	average
t(s)						t(s)					
k	5	6	7	8		k	5	6	7	8	
t(s)						t(s)					
β_1（1/s^2）						β_2（1/s^2）					

Table 2 Measure the moment of inertia of the ring R_{out}= mm R_{in}= mm m_{ring}= g

Uniform deceleration						Uniform acceleration $R_{cone\ pulley}$= mm m_{weight}= g					
k	1	2	3	4	average	k	1	2	3	4	average
t(s)						t(s)					
k	5	6	7	8		k	5	6	7	8	
t(s)						t(s)					
β_3（1/s^2）						β_4（1/s^2）					

Table 3 Measure the moment of inertia of the cylinders $R_{cylinder}$= mm， $m_{cylinder}\times 2$ = g

Uniform deceleration						Uniform acceleration $R_{cone\ pulley}$= mm m_{weight}= g					
k					average	k					average
t(s)						t(s)					
k						k					
t(s)						t(s)					
β_5（1/s^2）						β_6（1/s^2）					

Data Processing

1. Calculate the moment of inertia of the stage J_1

Process the data by the differential method. The values of β_1 and β_2 were calculated using Eq. (9), and their average values were calculated as the measurements of β_1 and β_2. The moment of inertia J_1 of the empty stage can be calculated from Eq. (4).

2. Calculate the moment of inertia of the ring J_3.

Process the data by the differential method. The values of β_3 and β_4 were calculated using Eq. (9), and their average values were calculated as the measurements of β_3 and β_4. The moment of inertia J_3 of the ring can be calculated from Eq. (6). The moment of inertia of a ring rotating around the geometric central axis is

$$J_{\text{ring}} = \frac{m}{2}\left(R_{out}^2 + R_{in}^2\right)$$

Calculate the moment of inertia of the ring and compare it with the measured value J_3. Calculate the relative error.

$$E = \frac{|J_{\text{ring}} - J_3|}{J_{\text{ring}}} \times 100\%$$

3. Verify the parallel axis theorem.

Calculate the moment of inertia of the cylindrical sample J_5 using the above method. The moment of inertia of a cylinder rotating around the geometric central axis is

$$J_0 = \frac{1}{2}mR^2$$

When the rotating shaft moves in parallel for a distance of d, its moment of inertia is

$$J_{parallel} = J_0 + md^2$$

Calculate the moment of inertia of the two cylinders and compare it with the measured value J_5. Calculate the relative error and verify the parallel axis theorem.

Questions

1. Why can't the strings overlap when winding?

2. When measuring the moment of inertia of an empty stage, why should we first rotate the empty stage before starting the counter?