Measurement of the Young’s Modulus of Wire by Elongating

Elastic modulus is an important physical quantity that describes the ability of solid materials to resist elastic deformation. According to different stress conditions, it can be divided into Young's modulus, shear modulus, and bulk modulus. Young's modulus is only related to the properties and temperature of the material. Young's modulus is independent of the geometric shape of the material. It has a great impact on production and scientific research. In this experiment, Young's modulus of steel wire is measured by Elongating. In order to measure the small elongation of steel wires, the optical lever method is used in the experiment. The optical lever is a device that uses the principle of optical amplification to measure small length changes. It has the characteristics of intuition, simplicity, and high accuracy.

Objectives

1. Learn the principle of the optical lever and use this method to measure Young's modulus of steel wire.
2. Select reasonable experimental conditions to reduce the system error.
3. Calculate significant figures and uncertainty.

Apparatus

The apparatus is shown in Fig.1. It includes an experimental stand, a scale, a steel wire, an optical lever, a tension meter, a tension sensor, and a telescope.

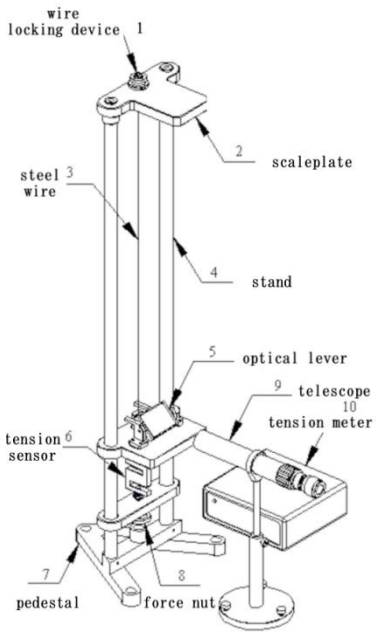

Fig. 1 Experimental device of Young's modulus

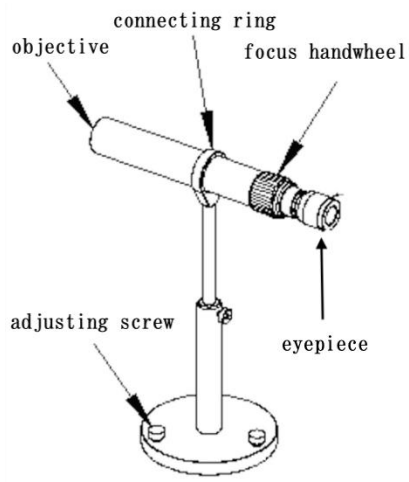

Fig. 2 Telescope

Theory

A steel wire of uniform thickness has a length of L and a cross-sectional area of A. After the tensile force F acts on the steel wire, the elongation length of the steel wire is ΔL. F/A is the force exerted on a unit cross-sectional area of a steel wire, called stress. $\Delta L/L$ is the relative elongation of the steel wire, called strain. According to Hooke's law, the stress and strain of a solid are directly proportional. It can be concluded that

$$\frac{F}{A} = E\frac{\Delta L}{L}$$

$$\text{or} \qquad E = \frac{F/A}{\Delta L/L} \tag{1}$$

In Eq. (1), E is known as Young's modulus, and the unit is N/m^2. It is the property of the material itself. When the material deforms, the greater E, the greater the force per unit cross-sectional area.

The length of the steel wire is L and the diameter is d. Hang a weight with a mass of m at the end of the steel wire, and the elongation of the steel wire is ΔL. According to Eq. (1), Young's modulus of steel wire is

$$E = \frac{F/A}{\Delta L/L} = \frac{mg\Big/\left(\frac{1}{4}\pi d^2\right)}{\Delta L/L} = \frac{4mgL}{\pi d^2 \Delta L} \tag{2}$$

In the formula, the length L of the steel wire is measured with the steel tape, and the diameter d of the steel wire is measured with a screw micrometer. The mass m of the weight can be obtained from a digital tensile meter, and the elongation of the steel wire ΔL can be measured using an optical lever.

The optical lever system is shown in Fig. 3. The optical lever includes a mirror, a mirror shaft bracket, and a movable foot connected to the mirror.

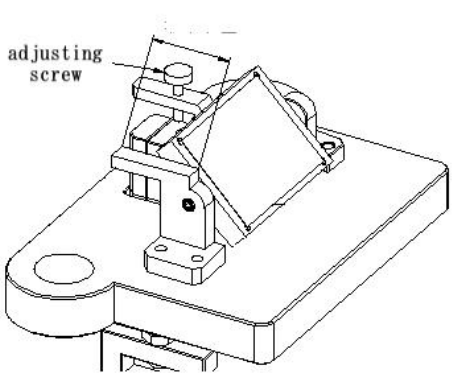

Fig. 3 Optical lever

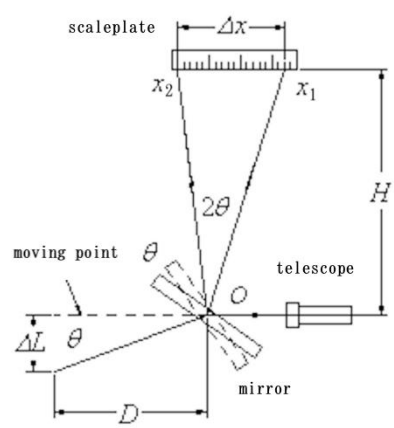

Fig. 4 Schematic diagram of optical lever

The principle of the optical lever is shown in Fig. 4. When the optical lever mirror is in the initial position, the scale seen through the telescope is x_1. When the wire is pulled,

the wire elongates ΔL. When the moving foot descends, the angle of rotation of the mirror is θ. Depending on the law of reflection, the light entering the telescope rotates by 2θ, at this point, the scale seen through the telescope is x_2, and the change in scale is $\Delta x=x_2-x_1$. In the experiment, D is the horizontal distance between the mirror rotation axis and the moving foot, which is much greater than ΔL. So θ is very small. H is the vertical distance between the mirror rotation axis and the scale. From the geometric relationship in Fig. 4, when θ is very small it can be concluded that

$$\Delta L \approx D \cdot \theta \text{ , } \Delta x \approx H \cdot 2\theta$$

$$\Delta x = \frac{2H}{D} \cdot \Delta L \qquad (4)$$

$\frac{2H}{D}$ is called the magnification of the optical lever. In the instrument, H is much larger than D. In this way, the small displacement ΔL becomes a large displacement that is easy to measure Δx. From Eq. (3) and Eq. (4), it can be concluded that

$$E = \frac{8mgLH}{\pi d^2 D} \cdot \frac{1}{\Delta x} \qquad (5)$$

The Young's modulus of the steel wire is obtained by measuring each physical quantity in Eq. (5).

Contents

1. Adjust the experimental frame

(1) Release the force nut, adjust the steel wire locking device, and make the line and platform level.

(2) Turn on the digital tension meter and backlight.

(3) Turn on the power switch of the digital tension meter and preheat for 10 min.

(4) Rotate the force nut to apply pre-tension m0 to the wire.

2. Adjust the telescope

(1) Adjust the mirror axis so that it is roughly on the center line of the telescope.

(2) Adjust the eyepiece so that the cross is clearly visible. Adjust the focus handwheel for a clear view.

(3) Rotate the telescope so that the horizontal mark is parallel to the scale line of the ruler.

(4) Adjust the knob of the plane mirror so that the cross line aligns with the scale less than or equal to 2.0 cm.

3. Data measurement

(1) Measure the original length of the wire with a steel tape measure.

(2) Measure the vertical distance H from the mirror axis to the ruler with a steel tape measure.

(3) The optical lever constant D is measured with a vernier caliper.

(4) The diameters of the wire at different positions are measured with a screw micrometer.

(5) Measure the scale x and the tension M, and record the scale for every 1kg increase.

Precautions

(1) The mirror surface shall not be touched by hand, and the rear foot of the optical lever shall be placed on the slider;

(2) The telescope should not be adjusted during the experiment, and the experimental table should be kept stable to ensure the stability of the telescope;

(3) When the force is increased or decreased, the force nut cannot be rotated;

(4) After the completion of the experiment, loosen the force nut so that the wire can be freely extended, and close the digital tension meter.

Data Recording

Table 1 One-off measurement data

The length of the wire L (mm)	Distance from mirror to ruler H (mm)	Optical lever constant D (mm)

Table 2 Wire diameter measurement data Zero error of screw micrometer_____mm

Measuring position	The upper		The middle		The bottom	
	1	2	3	4	5	6
The wire diameter (mm)						

Table 3 The scale and the tension data when increasing and reducing force

serial number	1	2	3	4	5	6	7	8
The tension m_i(kg)	0.00	1.00	2.00	3.00	4.00	5.00	6.00	7.00
Scale when increasing force $+x_i$(mm)								
Scale when reducing force $-x_i$(mm)								
Average scale (mm)								
Variation of the scale Δx (mm)								

Data Processing

(1) Calculate Young's modulus by charting method. The coordinates of the two data points used must be identified in the image to calculate the slope.

(2) Use the least square method to process data (x is the tension apparent value m and y is the scale change Δx).

Calculate the slope $k = \frac{\overline{x}\cdot\overline{y}-\overline{xy}}{(\overline{x})^2-\overline{x^2}}$ Calculate Young's modulus $E = \frac{8gLH}{\pi d^2 Dk}$

(3) Calculate the uncertainty u(H), u(L), u($\overline{d}$), u(D), u(Δx).

$$u(H) = \frac{1}{2}mm, u(L) = \frac{1}{2}mm, u(\Delta x) = \frac{1}{2}mm, u(D) = 0.02mm$$

$$u(\overline{d}) = \sqrt{\left[\frac{\partial\overline{d}}{\partial d_1}u(d_1)\right]^2 + \left[\frac{\partial\overline{d}}{\partial d_2}u(d_2)\right]^2 + \ldots + \left[\frac{\partial\overline{d}}{\partial d_3}u(d_3)\right]^2} = \sqrt{6\left[\frac{u(d_i)}{6}\right]^2} = \frac{u(d_i)}{\sqrt{6}}$$

(4) Calculate the total uncertainty.

$$u(E) = \sqrt{\left[\frac{u(H)}{H}\right]^2 + \left[\frac{u(L)}{L}\right]^2 + \left[\frac{u(D)}{D}\right]^2 + \left[\frac{2u(\overline{d})}{\overline{d}}\right]^2 + \left[\frac{u(\Delta x)}{\Delta x}\right]^2} \cdot E$$

(5) Calculate the relative error and compare Young's modulus E obtained by the two methods with the theoretical value E_0. $E_0 = 2.05\times10^{11}$ N/m^2

$$\delta = \frac{|E - E_0|}{E_0} \times 100\%$$

Questions

1. Why should a certain prestress be applied to the steel wire before starting the measurement?

2. Why should we measure the elongation of steel wires during the force application process and the force reduction process respectively?