Measurement of Ultrasonic Speed

Sound is a mechanical wave propagating in an elastic medium. It is a longitudinal wave whose oscillating direction is consistent with the direction of propagation. Acoustic waves with a frequency lower than 20 Hz are infrasound waves, and acoustic waves with a frequency between 20 Hz and 20 kHz are called audible sound waves. Sound waves larger with a frequency than 20 kHz are called ultrasonic waves. The propagation speed of sound waves in the medium is related to the characteristics and state of the medium. Therefore, it can be used to study the characteristics or state changes of the medium by measuring sound speed in the medium. It is very important in the field of application of the sound wave by measuring the sound speed which is one of the characteristics of it.

There are two kinds of common methods for measuring the ultrasonic speed. The first is to measure the propagation distance l and time interval t of ultrasonic wave, which can calculate the speed v according to $v = \frac{l}{t}$. The second is to measure the frequency f and wavelength λ, and calculate the speed v according to $v=f\lambda$. In this experiment, the second method is used to measure the ultrasonic speed.

Objectives

1. The ultrasonic speed is measured by standing wave resonance method and phase comparison method.
2. Master the least square method to process data.
3. Review the use of oscilloscope and signal generator.

Apparatus

Ultrasonic speed measuring instrument, oscilloscope, function generator, thermometer.

Theory

The basic equation for measuring ultrasonic speed in this experiment is

$$v = f \cdot \lambda$$

The frequency f of the ultrasonic wave can be measured by the signal generator, and the wavelength λ measurement by standing wave method and phase comparison method.

1. Standing wave method

S_1 and S_2 are piezoelectric transducers with parallel surfaces and the same natural frequencies. The sine signal acts on S_1, causing S_1 to produce forced vibration, and excites the ultrasonic wave in the surrounding space and spreads to the right. S_2 is the receiver and connected to the oscilloscope. The incident wave is reflected on the face of S_2 and coherently superimposed with the incident wave to form a standing wave as

in Fig. 1.

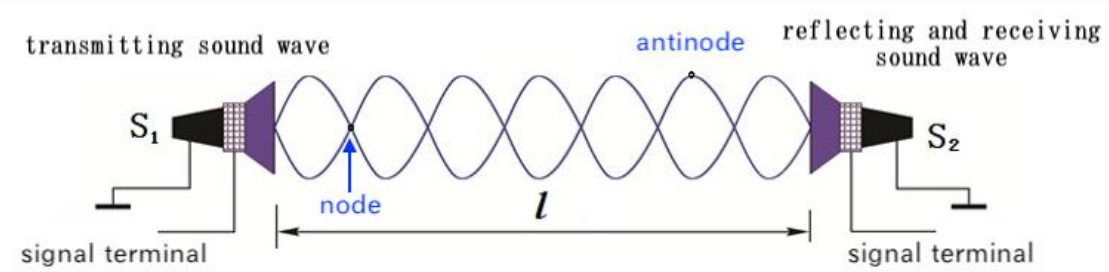

Fig.1 Principle of ultrasonic speed measurement

In Fig. 1, the distance between the two transducers is l and the wavelength is λ. The standing wave appears when $l = n\frac{\lambda}{2}$, and the signal received at S_2 is the largest. The signal received at S_2 is the smallest when l=(2n+1)$\frac{\lambda}{4}$. If l is changed continuously, the signal in the oscilloscope will change periodically between the maximum and the minimum. The distance change corresponding to the maximum (or minimum) of two adjacent signals is $\frac{\lambda}{2}$. The maximum value of sound pressure signal gradually decreases with the increase of distance l between S_2 and S_1, as shown in Fig. 2.

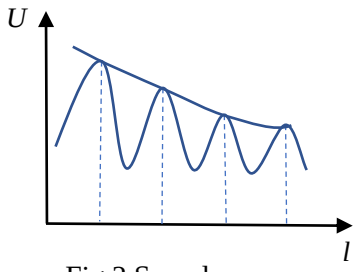

Fig.2 Sound pressure

2. Phase comparison method

The ultrasound propagates from S_1 to S_2 with a certain phase difference. When the distance between them is l, the phase difference is $\varphi = \frac{2\pi}{\lambda}l$. When the distance between the transmitter and the receiver is changed by a wavelength, the phase difference is changed 2π. Therefore, we can measure the phase difference of the two waveforms by Lissajous patterns to determine the wavelength. The two waveforms applied to the transmitter and received by the receiver are both sinusoidal with the same frequency. A Lissajous pattern can be observed on the oscilloscope by connecting them to the vertical and horizontal deflection plates through the X-Y mode. The shape of the Lissajous pattern will change with the phase difference. Fig. 3 shows the Lissajous patterns and the phase difference between the two input waveforms. As shown in Fig. 3, when the position of the receiver is moved it can be observed that the shape of the Lissajous pattern changes. When the Lissajous pattern changes in correspondence with the change in phase difference from Δφ=0 to Δφ=2π, the traveling distance is λ.

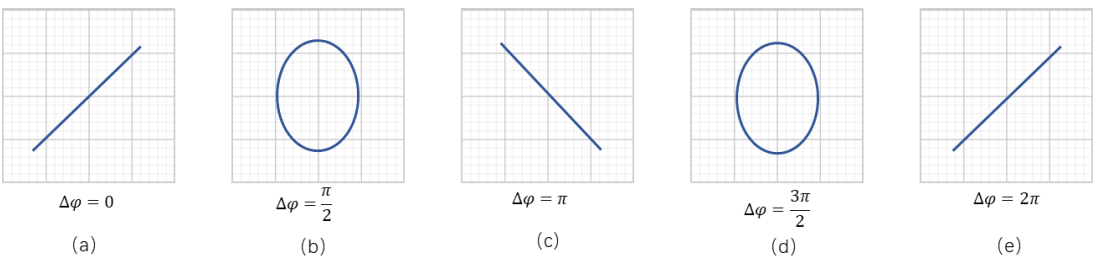

Fig. 3 Lissajous patterns and the phase difference between the two input waveforms

3. Piezoelectric crystal

A piezoelectric transducer is a device that transforms one type of energy to another. The piezoelectric effect is the accumulation of charge resulting from an applied mechanical force. It converts mechanical energy into electrical energy. The reverse piezoelectric effect is the mechanical strain resulting from an applied electrical field. It converts electrical energy into mechanical energy. Electrical contacts are made to the opposite faces of a crystal. If an alternating voltage of high frequency is applied to these contacts, the crystal vibrates at the same frequency as the applied voltage, emitting a beam of ultrasonic waves, as shown in Fig. 4.

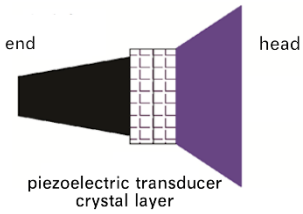

Fig. 4 Piezoelectric transducer

Contents

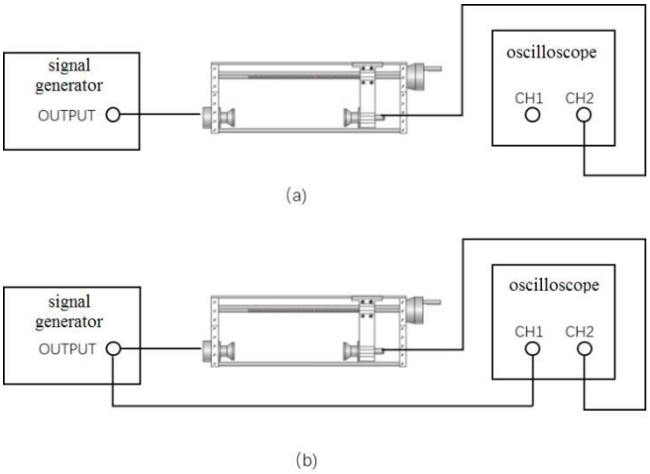

Fig. 5 Instrument Connection Diagram

1. Standing wave method

(1) Set up the circuit as shown in Fig. 5(a).

(2) Move the receiver S_2 to make the waveform amplitude reach a large size, and then adjust the frequency of the signal generator. When the amplitude reaches the maximum, the signal resonates with the transducer and then record the resonant frequency.

(3) Set the receiver and transmitter about 10 cm apart, then move the receiver away from the transmitter. When the amplitude reached its maximum on the oscilloscope, record the position of receiver S_2.

(4) Move the receiver S_2, and record the data when the amplitude reaches the maximum each time.

2. Phase comparison method

(1) Set up the circuit as shown in Fig. 5(b).

(2) Choose 'X-Y mode' to get a Lissajous pattern on the oscilloscope.

(3) Move the receiver, until the Lissajous pattern is changed to a line with positive

slope as shown in Fig. 3(a). Record the positions of the receiver when the same pattern appears one after another.

Precautions

1. The voltage amplitude of the signal generator is 10-15Vpp. Press the "Output" key to output the signal.
2. Move the transducer in one direction to avoid the error caused by space difference.
3. Keep the distance between the two transducers greater than 5cm during measurement.
4. Press AUTO control on the oscilloscope to obtain stable waveform.
5. Set X-Y mode on the oscilloscope in phase comparison method.

Data Taking

Resonance frequency f= _____kHz Temperature T=_____℃ Unit：*mm*

No. / methods	1	2	3	4	5	6	7	8	…	12
Standing wave method										
Phase comparison method										

Data Analysis

1. Calculate the wavelength by the least square method:

$$y=kx+b,\ k=\frac{\bar{x}\cdot\bar{y}-\overline{xy}}{\bar{x}^2-\overline{x^2}}$$

where y is the position of the receiver, x is the number from 1 to 12, so the wavelength can be calculated by $k=\frac{\lambda}{2}$.

2. Calculate the wavelength by the successive difference method:

$$\lambda_i=\frac{(S_{i+6}-S_i)}{6}$$

$$\bar{\lambda}=\frac{(S_7-S_1)+(S_8-S_2)+\cdots+(S_{12}-S_6)}{6\times 6}$$

Calculate the uncertainty of λ and f:

$$u_A=S_{\bar{\lambda}}=\sqrt{\frac{\sum_{i=1}^{6}(\lambda_i-\bar{\lambda})^2}{6(6-1)}}$$

$$u_B=\frac{\Delta_m}{\sqrt{3}}\ \ (\Delta_m=0.02\ mm)$$

$$u(\lambda) = \sqrt{{u_A}^2 + {u_B}^2}$$

$$u(f) = u_B = \frac{\Delta_m}{\sqrt{3}} \quad (\Delta_m = 0.001\text{kHz})$$

Calculate the relative uncertainty of v :

$$\ln v = \ln f + \ln \lambda$$

$$\mathrm{E}(v) = \sqrt{\left(\frac{u(f)}{f}\right)^2 + \left(\frac{u(\lambda)}{\bar{\lambda}}\right)^2} \times 100\%$$

Calculate the uncertainty of v :

$$u(v) = \bar{v} \cdot E(v)$$

Write the result:

$$v = \bar{v} \ (u(v))$$

$$E(v) = ___\ \%$$

3. Calculate the standard value of the speed by $v_s = v_0\sqrt{1 + \frac{T}{273.15}}$ ($v_0 = 331.45\ m/s$), and calculate the relative error of v by $\delta = \frac{|\bar{v} - v_s|}{v_s} \times 100\%$.

Questions

1. Why should the transducer be in resonant state during measurement?
2. Why should the transmitter and receiver be parallel to each other in standing wave method? Are they still required to be strictly parallel in phase comparison method?
3. Why do you use ultrasound to measure the speed of sound? Can you use audible sound? Why?