Principles and Applications of unbalanced DC Electric Bridge

Electric bridge is an important basic instrument in electromagnetics, electrical engineering, and electronics experiments. It can not only measure many electrical quantities, such as resistance, capacitance, inductance, mutual inductance, frequency, etc., but also cooperate with different sensing elements to measure many non-electrical quantities, such as temperature, pressure, humidity, displacement, acceleration, etc. Therefore, it is widely used in the field of automatic detection and automatic control. Especially in sensor technology, the bridge circuit is a very important component.

Through this experiment, students will master the principles and methods of measuring resistance by DC balanced bridge (Wheatstone bridge) and DC unbalanced bridge, and study the use of unbalanced bridge to measure the resistance temperature coefficient of metal materials.

Objectives

1. Master the principle of unbalanced bridge and the similarities and differences with balanced bridge.
2. Study the operating characteristics of unbalanced bridge.
3. Measure resistance temperature coefficient of Cu resistor by unbalanced bridge.

Apparatus

DC power supply, multimeter (or voltmeter), resistance box, electrical experiment kit, heating device, and wires.

Theory

1. The DC balanced bridge - Wheatstone bridge

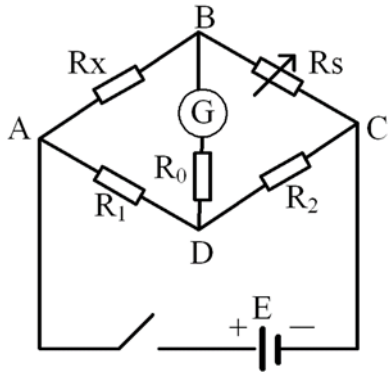

Fig. 1 The circuit of the Wheatstone bridge

Although resistance can be measured by voltammetry, the accuracy of this method depends on the accuracy of ammeter and voltmeter. The internal resistance of the meter and the contact resistance of each connection point can also affect the measurement

results. The bridge method measures resistance according to the balance method and the comparison method, and the measurement accuracy mainly depends on the accuracy of the standard resistor. Measuring resistance by bridge has become a basic method of electromagnetic measurement.

The circuit shown in Fig. 1, called a Wheatstone bridge, is used to determine the value of an unknown resistor R_X by comparison with three resistors R_1, R_2, and R_S. R_1 and R_2 are fixed resistors, R_X is an unknown resistor, R_S is an adjustable standard resistor (resistance box), E is a DC power supply, and G is a galvanometer. The Wheatstone bridge is suitable for measuring resistance of moderate resistance values (a few Ω to a few hundred thousand Ω). Adjust the resistance box until the current in the galvanometer G is zero; the bridge is then said to be balanced. At this time, the potentials at two points B and D are equal, then we get:

$$\frac{R_S}{R_X} = \frac{R_2}{R_1} \tag{1}$$

that is

$$R_X = \frac{R_1}{R_2} R_S \tag{2}$$

If $R_1/R_2=k$ and R_S are known, the resistance value of the unknown resistor R_X can be calculated from Eq. (2). Due to the existence of wire resistance and contact resistance, and the limitation of bridge sensitivity, Wheatstone bridges are not suitable for measuring resistance less than 1Ω.

2. The principle of the DC unbalanced bridge

The DC balanced bridge can accurately measure unknown resistor, but it takes some time to adjust the balance, so it can only be used to measure relatively stable resistor. In engineering and experiments, some resistors do not require high measurement accuracy, but require continuous and rapid measurement. This type of resistors can only be measured using unbalanced bridge. The basic principle of unbalanced bridge is based on the bridge circuit. According to the unbalanced voltage output of the bridge, the resistance can be calculated.

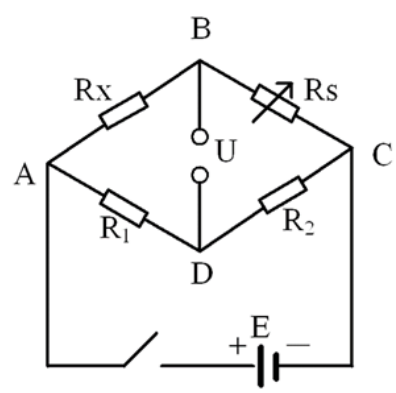

Fig. 2 The circuit of the unbalanced bridge

The unbalanced bridge is similar to the balanced bridge, and its circuit is shown in Fig. 2. Adjust the resistance box R_S, so that the electric potentials of B and D are equal, then the bridge balance, this is the balanced bridge. When the resistance value of the unknown resistor R_X changes, the electric potentials of B and D are no longer equal, and the bridge is in an unbalanced state. If R_1, R_2, and R_S are kept constant, the voltage U between B and D is only related to the change of R_X. According to the functional relationship between R_X and U, the change of resistor R_X can be calculated by measuring the unbalanced voltage U of the bridge circuit.

The unbalanced voltage U between B and D is

$$U = U_{BC} - U_{DC} = \frac{R_S}{R_X + R_S}E - \frac{R_2}{R_1 + R_2}E = \frac{R_1R_S - R_2R_X}{(R_1 + R_2)(R_X + R_S)}E \tag{3}$$

Before the experiment, the bridge must be adjusted to balance so that the voltage U=0. At this point, the balance condition is satisfied: $R_1R_S=R_2R_X$.

When the magnitude of the unknown resistor changes from R_X to $R_X+\Delta R_X$, the bridge is out of balance, and the voltage output between B and D is

$$U = \frac{R_2\Delta R_X}{(R_1 + R_2)(R_S + R_X + \Delta R_X)} \cdot E \tag{4}$$

Let $R_2/R_1=K$, and the relative change of the unknown resistor is $\delta=\Delta R_X/R_X$. According to the balance condition, the Eq. (4) can be expressed as

$$U = \frac{K\delta}{(1 + K)(1 + K + \delta)} \cdot E \tag{5}$$

According to Eq. (5), when K and the power supply voltage E are known, the relative change δ of the unknown resistor can be calculated from the unbalanced voltage U, and then the resistance value $R_X+\Delta R_X$ of the unknown resistor can be calculated from δ. This is the principle of measuring resistance by unbalanced bridge.

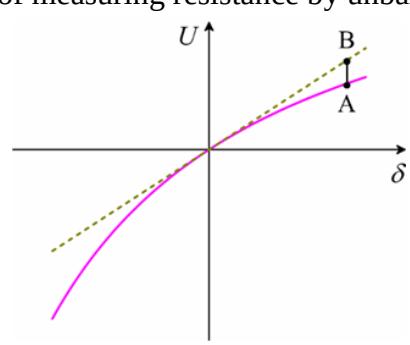

Fig. 3 Graph of U versus δ

The following conclusions can be drawn by analyzing Eq. (5):

(1) In general, there is no linear relationship between the unbalanced voltage U and the relative change δ of the resistance value. If δ is taken as the horizontal coordinate and U as the vertical coordinate, the curve as shown in Fig. 3 can be obtained. Only if $\delta<<K+1$, U has an approximate linear relationship with δ. (as shown by the dotted line in the figure)

$$U_0 = \frac{K\delta}{(1+K)^2} \cdot E \tag{6}$$

Where U_0 is the linear voltage.

(2) When $R_2/R_1=K=1$, Eq. (5) and Eq. (6) can be written as

$$U = \frac{\delta}{4+2\delta} \cdot E \tag{7}$$

$$U_0 = \frac{\delta}{4} \cdot E \tag{8}$$

(3) The unbalanced voltage U is proportional to the power supply voltage E, so the power supply voltage has a direct impact on the measurement results. A stabilized power supply should be used in the experiment.

3. The operating characteristics of unbalanced bridge

(1) The sensitivity of the output voltage of unbalanced bridge

The sensitivity S_u is the derivative of Eq. (5) with respect to δ:

$$S_u = \frac{\partial U}{\partial \delta} = \frac{KE}{(1+K+\delta)^2} \tag{9}$$

Its geometric meaning is the slope of the U~δ curve at each point in Fig. 3.

When $\delta \to 0$, the sensitivity is:

$$S_{u_0} = \frac{KE}{(1+K)^2} \tag{10}$$

Its geometric meaning is the slope of the U~δ curve at the origin in Fig. 3. When K=1, it has a maximum value $S_{u_0} = E/4$.

(2) The nonlinear error of unbalanced bridge

The nonlinear error of unbalanced bridge refers to the difference between the actual output voltage and the ideal output voltage for the same δ value, which can be expressed as

$$D = \frac{|U - U_0|}{U} \tag{11}$$

$|U - U_0|$ is the length of line segment AB in Fig. 3. From Eq. (5) and Eq. (6), we find

$$D = \frac{\delta}{1+K} \tag{12}$$

It can be seen that for a certain value of δ, the nonlinear error D is small when K is large. For a certain value of K, the nonlinear error D is proportional to the relative change δ of the unknown resistor. When the bridge arm is set to K=1, $D=\delta/2$. In general, when δ>5%, the nonlinearity can't be ignored.

4. Measurement of the resistance temperature coefficient of metals

The resistance of most metals increases with the increase of temperature. Within a certain temperature range, the resistance changes with temperature as follows

$$R_t = R_0(1+\alpha t) \tag{13}$$

Where R_t and R_0 are the resistance values of metal at t ℃ and 0 ℃ respectively, α is the resistance temperature coefficient. The unit of α is (℃)$^{-1}$. The α of copper used in this experiment changes very little in the range of -50 ℃ ~ 100 ℃, which can be regarded as a constant. Then we have

$$\alpha = \frac{R_t - R_0}{R_0 t} = \frac{\delta}{t} \tag{14}$$

When measuring the change of copper resistance with temperature using an unbalanced bridge, if $R_2/R_1=K=1$, the output voltage approximately satisfies Eq. (8). Substitute Eq. (14) into Eq. (8), then

$$U_0 = \frac{1}{4}\alpha E t \tag{15}$$

In the Eq. (15), the unbalanced voltage U_0 is proportional to the temperature t of the copper resistor. In this experiment, first adjust the bridge to balance at room temperature, and then start heating. Record the different temperatures t and the corresponding unbalanced voltage U_0, and obtain the resistance temperature coefficient of copper using a graphical method.

Contents

1. Analyse the characteristics of unbalanced bridge

(1) Wiring as shown in Fig. 2. $R_1 = R_2 = 100\Omega$, $R_S = 200\Omega$, resistance box is used as R_X, B and D are connected with a digital voltmeter, adjust and keep the power supply voltage E as 4V.

(2) Tune R_X to make bridge balanced and record R_X.

(3) Starting from the balanced state, change R_X according to the values given in Table 1. Record the corresponding unbalanced voltage U every time R_X is changed.

(4) $R_1 = 100\Omega$, set the value of R_2/R_1 to 10 and 0.1, respectively. Repeat the measurement in the first 3 steps.

2. Measure the resistance temperature coefficient of Cu resistor

(1) R_X is replaced by Cu resistor, R_S is replaced by resistance box, $R_1=R_2=100\ \Omega$. Connect the wire between the temperature controller and the heating furnace.

(2) Adjust the resistance box R_S at room temperature to balance the bridge and record R_S.

(3) Increase temperature and record voltage U_0 per 5 ℃.

Precautions

1. Turn off the fan power when heating.

2. After finishing the experiment, turn off the heating switch and cut off the power before leaving.

Data Taking

Table 1 Study the characteristics of unbalanced bridge

K=1	When the bridge is balanced R_X=___Ω	ΔR_X (Ω)	-180	-150	-100	-50	-30	-10	0	10	30	50	100	150	200
		$\delta=\Delta R_X/R_X$													
		U (V)													
K=10	When the bridge is balanced R_X=___Ω	ΔR_X (Ω)	-18	-15	-10	-5	-3	-1	0	1	3	5	10	15	20
		$\delta=\Delta R_X/R_X$													
		U (V)													
K=0.1	When the bridge is balanced R_X=___Ω	ΔR_X (Ω)	-1800	-1500	-1000	-500	-300	-100	0	100	300	500	1000	1500	2000
		$\delta=\Delta R_X/R_X$													
		U (V)													

Table 2 Variation of unbalanced voltage with temperature

t (℃)	Room temperature	25	30	35	……	95	100
U_0 (V)	0						

Data Analysis

1. Study the characteristics of unbalanced bridge

(1) According to the measured data, plot the curve of $U-\delta$ in the same coordinate system.

(2) According to the curve, calculate the S_{u0} and the D, compare with the theoretical values.

2. Measure the resistance temperature coefficient of Cu resistor

(1) Draw U_0-T line according to the measured data, and calculate the slope of the line by drawing method.

(2) According to Eq. (15), the slope of the line is equal to $\frac{1}{4}\alpha E$, so the resistance temperature coefficient α of copper can be calculated according to the slope.

Questions

1. What are the advantages of unbalanced bridges compared to balanced bridges?

2. Why should the bridge be adjusted to balance at room temperature before measuring the resistance temperature coefficient of copper resistor?

3. Why is the bridge arm set to R_1=R_2=100Ω when measuring the resistance temperature coefficient of copper resistor?