University Physics

Hongguang Zhang
BJTU@Weihai
For undergraduates

主要内容

量子算法

0. Priliminary

Qubits

$$|0\rangle = \begin{bmatrix} 1 \\ 0 \end{bmatrix}, \quad |1\rangle = \begin{bmatrix} 0 \\ 1 \end{bmatrix}$$

Initial state

$$\boxed{|\psi_0\rangle = |0\rangle^{\otimes N} = |00\cdots 0\rangle}$$

Tensor product

$$|\psi\rangle = \begin{bmatrix} a \\ b \end{bmatrix}, \quad |\phi\rangle = \begin{bmatrix} c \\ d \end{bmatrix}$$

$$|\Psi\rangle = |\psi\rangle \otimes |\phi\rangle$$

$$\boxed{\begin{bmatrix} a \\ b \end{bmatrix} \otimes \begin{bmatrix} c \\ d \end{bmatrix} = \begin{bmatrix} a \cdot \begin{bmatrix} c \\ d \end{bmatrix} \\ b \cdot \begin{bmatrix} c \\ d \end{bmatrix} \end{bmatrix} = \begin{bmatrix} ac \\ ad \\ bc \\ bd \end{bmatrix}}$$

Qubit

Dimension of N-qubit: 2^N

比如，初始态：

$$|\psi_0\rangle = \begin{bmatrix} 1 \\ 0 \\ \vdots \\ 0 \end{bmatrix}_{2^N \times 1}$$

Tensor product

$$|0\rangle \otimes |1\rangle = \begin{bmatrix} 1 \\ 0 \end{bmatrix} \otimes \begin{bmatrix} 0 \\ 1 \end{bmatrix} = \begin{bmatrix} 1 \times \begin{bmatrix} 0 \\ 1 \end{bmatrix} \\ 0 \times \begin{bmatrix} 0 \\ 1 \end{bmatrix} \end{bmatrix} = \begin{bmatrix} 0 \\ 1 \\ 0 \\ 0 \end{bmatrix} = |01\rangle$$

Tensor product

Eigenstate of two qubit:

$$\phi_{ij} = |i> \otimes |j>$$

Tensor product

Superposition state of 2-qubit:

$$\psi = \sum_{i,j=0}^{1} c_{ij}\phi_{ij} = \sum_{i,j=0}^{1} c_{ij}|i> \otimes |j>$$

Tensor product

Superposition state of multiple-qubit:

$$\psi = \sum_{i_1, i_2 \ldots i_n = 0}^{1} c_{i_1, i_2 \ldots i_n} \phi_{i_1, i_2 \ldots i_n} = \sum_{i_1, i_2 \ldots i_n = 0}^{1} c_{i_1, i_2 \ldots i_n} | i_1, i_2 \ldots i_n >$$

1. The basis

Quantum computer

经典计算机处于 2^N个可能的态中的一个。量子计算机有纠缠态，其可以处于2^N个可能态构成的superpostion state，简单地说，量子计算机可以处于全部2^N个态上。

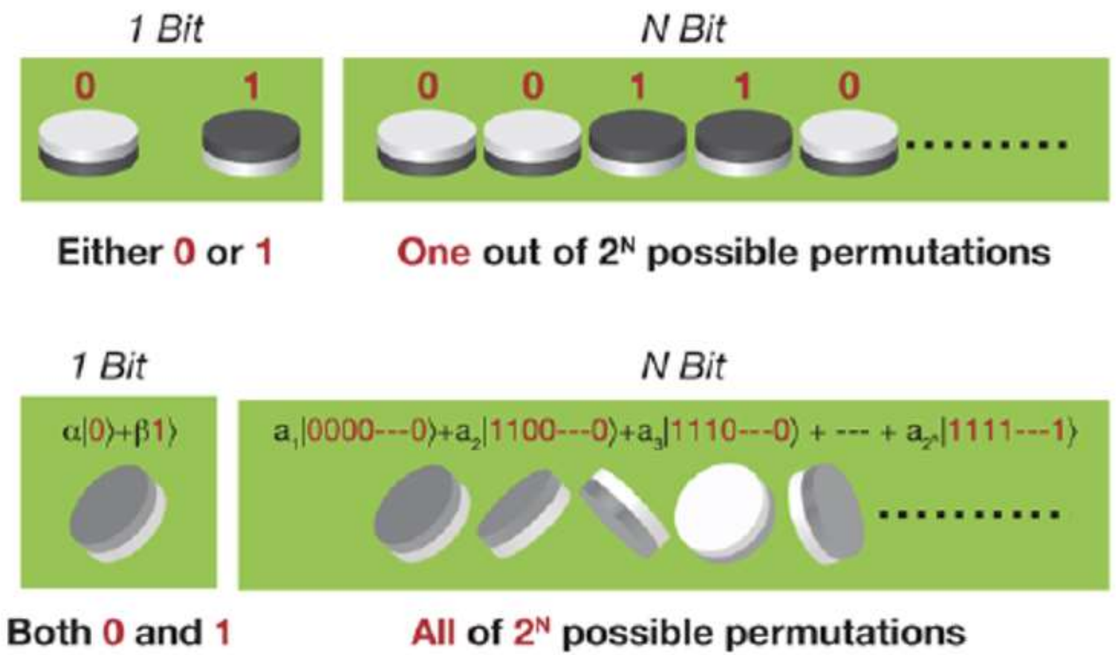

Quantum gate

量子门就是一个量子操作，就是一个厄密算符，就是一个幺正变换

NOT

Quantum circuit

量子电路由量子门组成

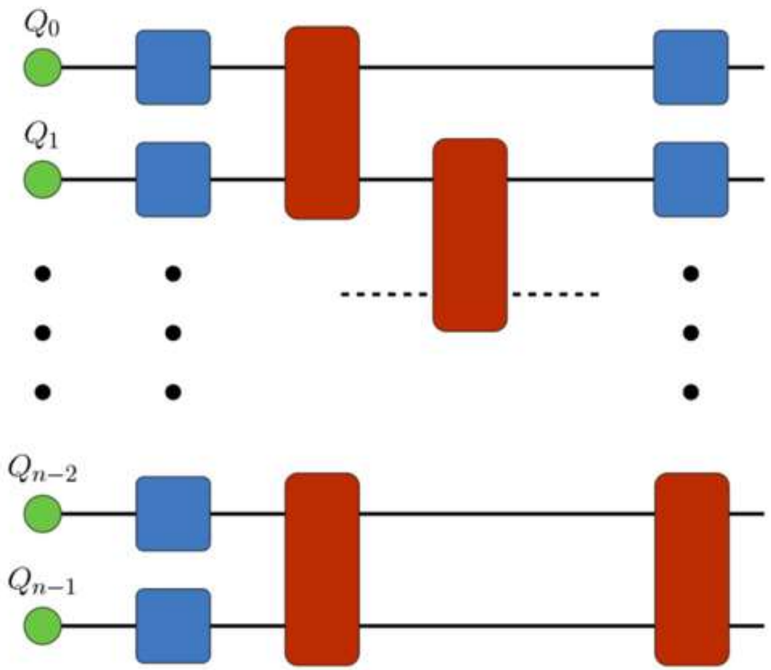

Quantum register

一个量子**寄存器就是一个**计算区域!

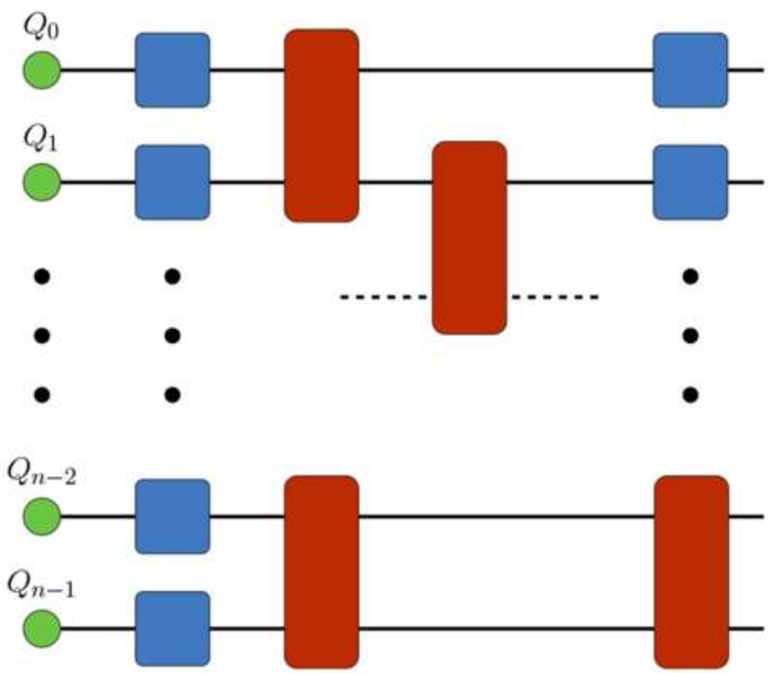

Computation process

量子计算的过程

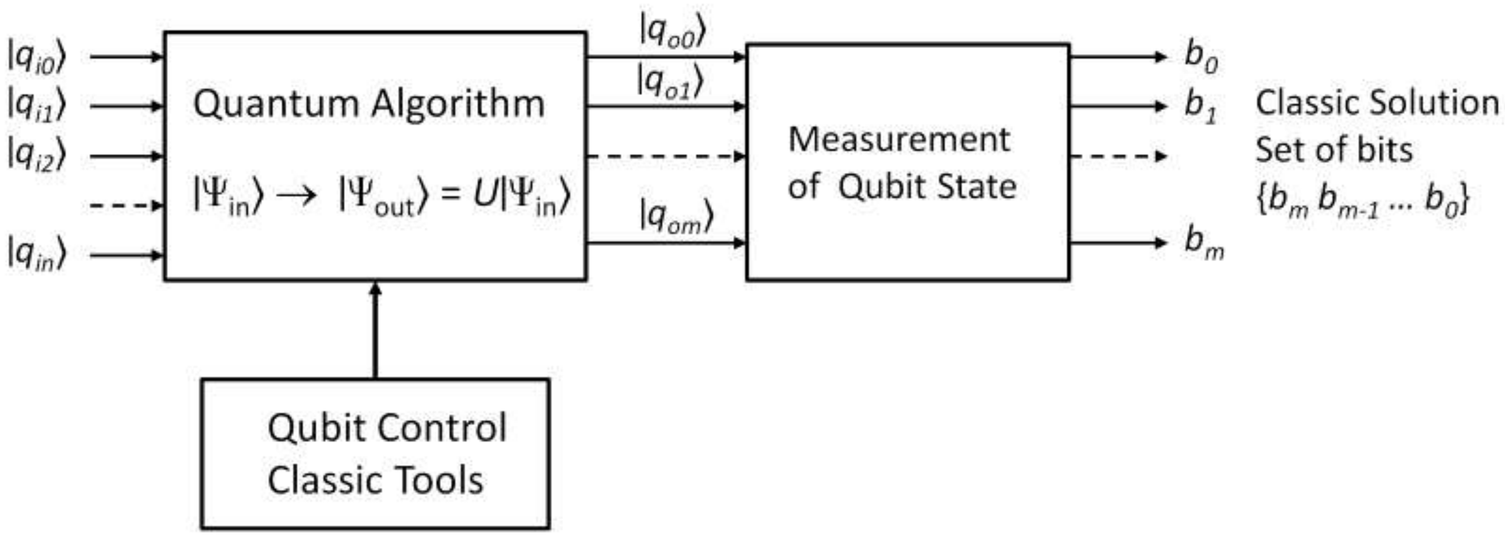

Quantum chip

量子芯片就是量子算符的物理实现，一般会由多个量子寄存器!

2. Gate, circuit, algorithm

Quantum gate

Operator	Gate(s)		Matrix
Pauli-X (X)	X	$\oplus$	$\begin{bmatrix} 0 & 1 \\ 1 & 0 \end{bmatrix}$
Pauli-Y (Y)	Y		$\begin{bmatrix} 0 & -i \\ i & 0 \end{bmatrix}$
Pauli-Z (Z)	Z		$\begin{bmatrix} 1 & 0 \\ 0 & -1 \end{bmatrix}$
Hadamard (H)	H		$\frac{1}{\sqrt{2}}\begin{bmatrix} 1 & 1 \\ 1 & -1 \end{bmatrix}$
Phase (S, P)	S		$\begin{bmatrix} 1 & 0 \\ 0 & i \end{bmatrix}$
$\pi/8$ (T)	T		$\begin{bmatrix} 1 & 0 \\ 0 & e^{i\pi/4} \end{bmatrix}$
Controlled Not (CNOT, CX)	$\bullet$ / $\oplus$		$\begin{bmatrix} 1 & 0 & 0 & 0 \\ 0 & 1 & 0 & 0 \\ 0 & 0 & 0 & 1 \\ 0 & 0 & 1 & 0 \end{bmatrix}$
Controlled Z (CZ)	$\bullet$ / Z	$\bullet$ / $\bullet$	$\begin{bmatrix} 1 & 0 & 0 & 0 \\ 0 & 1 & 0 & 0 \\ 0 & 0 & 1 & 0 \\ 0 & 0 & 0 & -1 \end{bmatrix}$
SWAP	$\times$ / $\times$	$\times$ / $\times$	$\begin{bmatrix} 1 & 0 & 0 & 0 \\ 0 & 0 & 1 & 0 \\ 0 & 1 & 0 & 0 \\ 0 & 0 & 0 & 1 \end{bmatrix}$
Toffoli (CCNOT, CCX, TOFF)	$\bullet$ / $\bullet$ / $\oplus$		$\begin{bmatrix} 1 & 0 & 0 & 0 & 0 & 0 & 0 & 0 \\ 0 & 1 & 0 & 0 & 0 & 0 & 0 & 0 \\ 0 & 0 & 1 & 0 & 0 & 0 & 0 & 0 \\ 0 & 0 & 0 & 1 & 0 & 0 & 0 & 0 \\ 0 & 0 & 0 & 0 & 1 & 0 & 0 & 0 \\ 0 & 0 & 0 & 0 & 0 & 1 & 0 & 0 \\ 0 & 0 & 0 & 0 & 0 & 0 & 0 & 1 \\ 0 & 0 & 0 & 0 & 0 & 0 & 1 & 0 \end{bmatrix}$

Hadamard Gate

$$H = \frac{1}{\sqrt{2}} \begin{bmatrix} 1 & 1 \\ 1 & -1 \end{bmatrix}$$

Hadamard Gate

Hadamard 门作用到1-qubit上：

$$H|0> = \frac{1}{\sqrt{2}}(|0> \ +|1>)$$
$$H|1> = \frac{1}{\sqrt{2}}(|0> \ -|1>)$$

Hadamard Gate

Hadamard 门作用到2-qubit上：

$$H^{\otimes 2}|00\rangle = H|0\rangle \otimes H|0\rangle = \left(\frac{1}{\sqrt{2}}(|0\rangle + |1\rangle)\right) \otimes \left(\frac{1}{\sqrt{2}}(|0\rangle + |1\rangle)\right) = \frac{1}{2}(|00\rangle + |01\rangle + |10\rangle + |11\rangle)$$

Hadamard Gate

Hadamard 门作用到n-qubit上：

$$H^{\otimes n}|0\rangle^{\otimes n} = \frac{1}{\sqrt{2^n}}\left(|00\cdots0\rangle + |00\cdots1\rangle + \cdots + |11\cdots1\rangle\right)$$

$$\Updownarrow$$

$$H^{\otimes n}|0\rangle^{\otimes n} = \left(\frac{1}{\sqrt{2}}(|0\rangle + |1\rangle)\right)^{\otimes n}$$

由此看出：此量子态并非纠缠态！

Hadamard Gate

Hadamard 门作用到n-qubit上：

$$H^{\otimes n}|0\rangle^{\otimes n} = \frac{1}{\sqrt{2^n}}\left(|00\cdots0\rangle + |00\cdots1\rangle + \cdots + |11\cdots1\rangle\right)$$

$$\Updownarrow$$

$$H^{\otimes n}|0\rangle^{\otimes n} = \frac{1}{\sqrt{2^n}}\sum_{x=0}^{2^n-1}|x\rangle$$

用 n 个 qubit，可以唯一地表示 0 到 2^n-1 之间的每一个整数，通过二进制编码的方式。

CNOT Gate

$$\mathrm{CNOT} = \begin{bmatrix} 1 & 0 & 0 & 0 \\ 0 & 1 & 0 & 0 \\ 0 & 0 & 0 & 1 \\ 0 & 0 & 1 & 0 \end{bmatrix}$$

CNOT Gate

$$\text{CNOT} \cdot \begin{bmatrix}1\\0\\0\\0\end{bmatrix} = \begin{bmatrix}1\\0\\0\\0\end{bmatrix} = |00\rangle$$

$$\text{CNOT} \cdot \begin{bmatrix}0\\1\\0\\0\end{bmatrix} = \begin{bmatrix}0\\1\\0\\0\end{bmatrix} = |01\rangle$$

$$\text{CNOT} \cdot \begin{bmatrix}0\\0\\0\\1\end{bmatrix} = \begin{bmatrix}0\\0\\1\\0\end{bmatrix} = |10\rangle$$

$$\text{CNOT} \cdot \begin{bmatrix}0\\0\\1\\0\end{bmatrix} = \begin{bmatrix}0\\0\\0\\1\end{bmatrix} = |11\rangle$$

CNOT Gate

一个生成纠缠态的例子：

$$|\psi\rangle = H|0\rangle \otimes |0\rangle = \left(\frac{1}{\sqrt{2}}(|0\rangle + |1\rangle)\right) \otimes |0\rangle = \frac{1}{\sqrt{2}}(|00\rangle + |10\rangle)$$

$$\Downarrow$$

$$\text{CNOT}\left(\frac{1}{\sqrt{2}}(|00\rangle + |10\rangle)\right) = \frac{1}{\sqrt{2}}(|00\rangle + |11\rangle)$$

这就是著名的 Bell 态 $|\Phi^+\rangle$，**是纠缠态**，无法分解成张量积形式。

Toffoli Gate

$$\text{Toffoli} = \begin{bmatrix} 1 & 0 & 0 & 0 & 0 & 0 & 0 & 0 \\ 0 & 1 & 0 & 0 & 0 & 0 & 0 & 0 \\ 0 & 0 & 1 & 0 & 0 & 0 & 0 & 0 \\ 0 & 0 & 0 & 1 & 0 & 0 & 0 & 0 \\ 0 & 0 & 0 & 0 & 1 & 0 & 0 & 0 \\ 0 & 0 & 0 & 0 & 0 & 1 & 0 & 0 \\ 0 & 0 & 0 & 0 & 0 & 0 & 0 & 1 \\ 0 & 0 & 0 & 0 & 0 & 0 & 1 & 0 \end{bmatrix}$$

Toffoli Gate

$$\text{Toffoli}(|a, b, c\rangle) = |a, b, c \oplus (a \cdot b)\rangle$$

$$|\psi\rangle = \frac{1}{2}(|000\rangle + |110\rangle + |101\rangle + |111\rangle)$$

$$\text{Toffoli}|\psi\rangle = \frac{1}{2}(|000\rangle + |111\rangle + |101\rangle + |110\rangle)$$

Swap Gate

$$\mathrm{SWAP} = \begin{bmatrix} 1 & 0 & 0 & 0 \\ 0 & 0 & 1 & 0 \\ 0 & 1 & 0 & 0 \\ 0 & 0 & 0 & 1 \end{bmatrix}$$

Swap Gate

$$\mathrm{SWAP}\,|a\rangle \otimes |b\rangle = |b\rangle \otimes |a\rangle$$

- $\mathrm{SWAP}\,|01\rangle = |10\rangle$
- $\mathrm{SWAP}\,|10\rangle = |01\rangle$
- $\mathrm{SWAP}\,|00\rangle = |00\rangle$，不变
- $\mathrm{SWAP}\,|11\rangle = |11\rangle$，不变

QFT gate

$$\mathrm{QFT}\,|x\rangle = \frac{1}{\sqrt{2^n}} \sum_{y=0}^{2^n-1} e^{2\pi i x y/2^n}\,|y\rangle$$

QFT gate

作用到1个qubit上：

$$\mathrm{QFT}\,|0\rangle = \frac{1}{\sqrt{2}}(|0\rangle + |1\rangle)$$
$$\mathrm{QFT}\,|1\rangle = \frac{1}{\sqrt{2}}(|0\rangle - |1\rangle)$$

QFT gate

作用到2个qubit上：

输入态 $|x_1x_0\rangle$（高位在左），变换为：

$$\mathrm{QFT}\,|x_1x_0\rangle = \frac{1}{2}\left[|0\rangle + e^{2\pi i 0.x_0}\,|1\rangle\right] \otimes \left[|0\rangle + e^{2\pi i (0.x_1x_0)}\,|1\rangle\right]$$

其中 $0.x_0 = \frac{x_0}{2}$， $0.x_1x_0 = \frac{x_1}{2} + \frac{x_0}{4}$

量子算法

1. 量子算法全都是针对特定问题的算法，不是通用的算法。
2. 几种量子算法就可以改变世界。
3. 量子计算机(量子算法) + 经典计算机(通用算法) 是未来可行的计算方案。