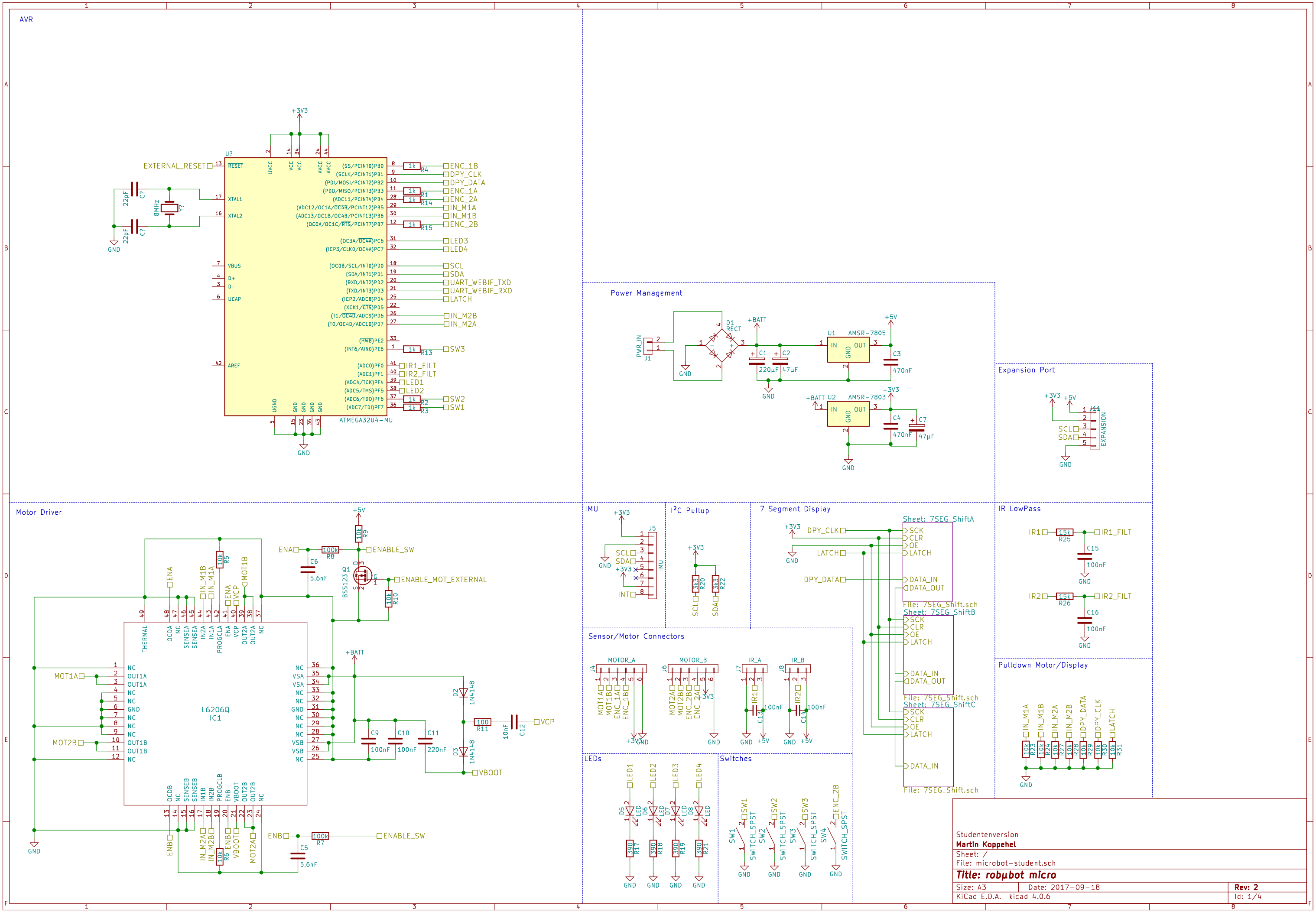
AVR
U?
ATMEGA32U4-MU
EXTERNAL_RESET
RESET
XTAL1
XTAL2
8MHz
Y?
22pF
C?
GND
+3V3
VBUS
D+
D-
UCAP
AREF
UVCC
VCC
AVCC
UGND
(SS/PCINT0)PB0
(SCLK/PCINT1)PB1
(PDI/MOSI/PCINT2)PB2
(PDO/MISO/PCINT3)PB3
(ADC11/PCINT4)PB4
(ADC12/OC1A/OC4B/PCINT12)PB5
(ADC13/OC1B/OC4B/PCINT13)PB6
(OC0A/OC1C/RTS/PCINT7)PB7
(OC3A/OC4A)PC6
(ICP3/CLK0/OC4A)PC7
(OC0B/SCL/INT0)PD0
(SDA/INT1)PD1
(RXD/INT2)PD2
(TXD/INT3)PD3
(ICP2/ADC8)PD4
(XCK1/CTS)PD5
(T1/OC4D/ADC9)PD6
(T0/OC4D/ADC10)PD7
(HWB)PE2
(INT6/AIN0)PE6
(ADC0)PF0
(ADC1)PF1
(ADC4/TCK)PF4
(ADC5/TMS)PF5
(ADC6/TDO)PF6
(ADC7/TDI)PF7
ENC_1B
DPY_CLK
DPY_DATA
ENC_1A
ENC_2A
IN_M1A
IN_M1B
ENC_2B
LED3
LED4
SCL
SDA
UART_WEBIF_TXD
UART_WEBIF_RXD
LATCH
IN_M2B
IN_M2A
SW3
IR1_FILT
IR2_FILT
LED1
LED2
SW2
SW1
R4
R1
R14
R15
R13
R2
R3
Power Management
PWR_IN
J1
D1
RECT
+BATT
C1
220µF
C2
47µF
U1
AMSR-7805
IN
OUT
GND
+5V
C3
470nF
U2
AMSR-7803
C4
470nF
C7
47µF
Expansion Port
+3V3
+5V
SCL
SDA
EXPANSION
Motor Driver
L6206Q
IC1
MOT1A
MOT2B
ENA
ENB
IN_M1B
IN_M1A
IN_M2A
IN_M2B
MOT1B
MOT2A
ENABLE_SW
ENABLE_MOT_EXTERNAL
Q1
BSS123
R8
R9
R5
R10
R6
R7
C6
5,6nF
C5
5,6nF
C9
100nF
C10
100nF
C11
220nF
D2
1N4148
D3
1N4148
R11
100
C12
10nF
VCP
VBOOT
IMU
J5
INT
I²C Pullup
R20
3k3
R22
3k3
7 Segment Display
Sheet: 7SEG_ShiftA
Sheet: 7SEG_ShiftB
Sheet: 7SEG_ShiftC
File: 7SEG_Shift.sch
SCK
CLR
OE
LATCH
DATA_IN
DATA_OUT
DPY_CLK
LATCH
DPY_DATA
IR LowPass
IR1
IR2
R25
R26
C15
C16
100nF
IR1_FILT
IR2_FILT
Pulldown Motor/Display
R23
R24
R27
R28
R29
R30
R31
Sensor/Motor Connectors
MOTOR_A
MOTOR_B
IR_A
IR_B
J4
J6
J7
J8
MOT1A
MOT1B
ENC_1A
ENC_1B
MOT2A
MOT2B
ENC_2B
ENC_2A
C13
C14
LEDs
LED1
LED2
LED3
LED4
D5
D6
D7
D8
R17
R18
R19
R21
Switches
SW1
SW2
SW3
SW4
SWITCH_SPST
Studentenversion
Martin Koppehel
Sheet: /
File: microbot-student.sch
Title: robµbot micro
Size: A3
Date: 2017-09-18
Rev: 2
KiCad E.D.A. kicad 4.0.6
Id: 1/4

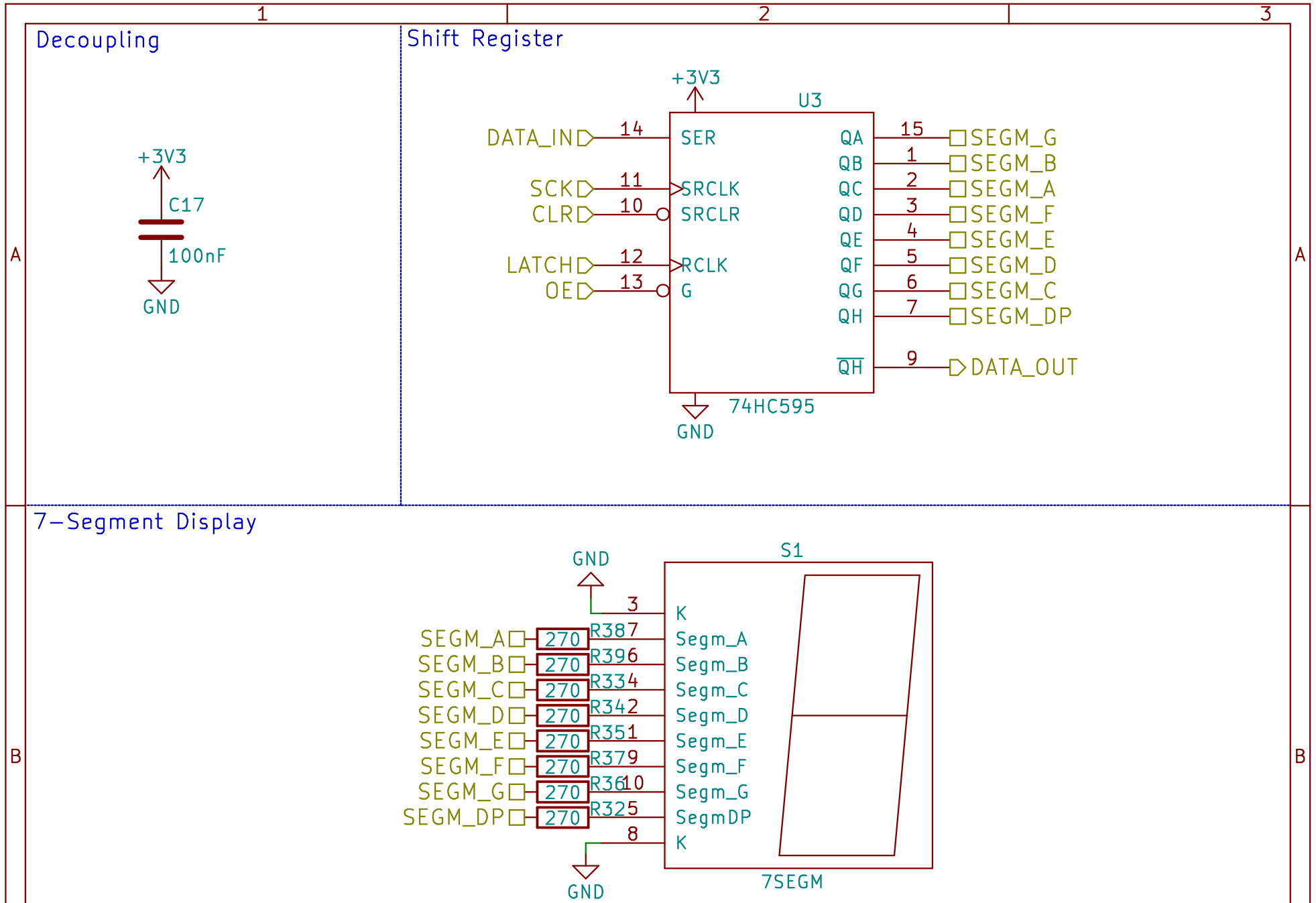

7-Segment Display
Studentenversion
Martin Koppehel

Sheet: /7SEG_ShiftA/
File: 7SEG_Shift.sch

Title: robµbot micro

Size: User	Date: 2017-09-18	**Rev: 2**
KiCad E.D.A. kicad 4.0.6		Id: 2/4