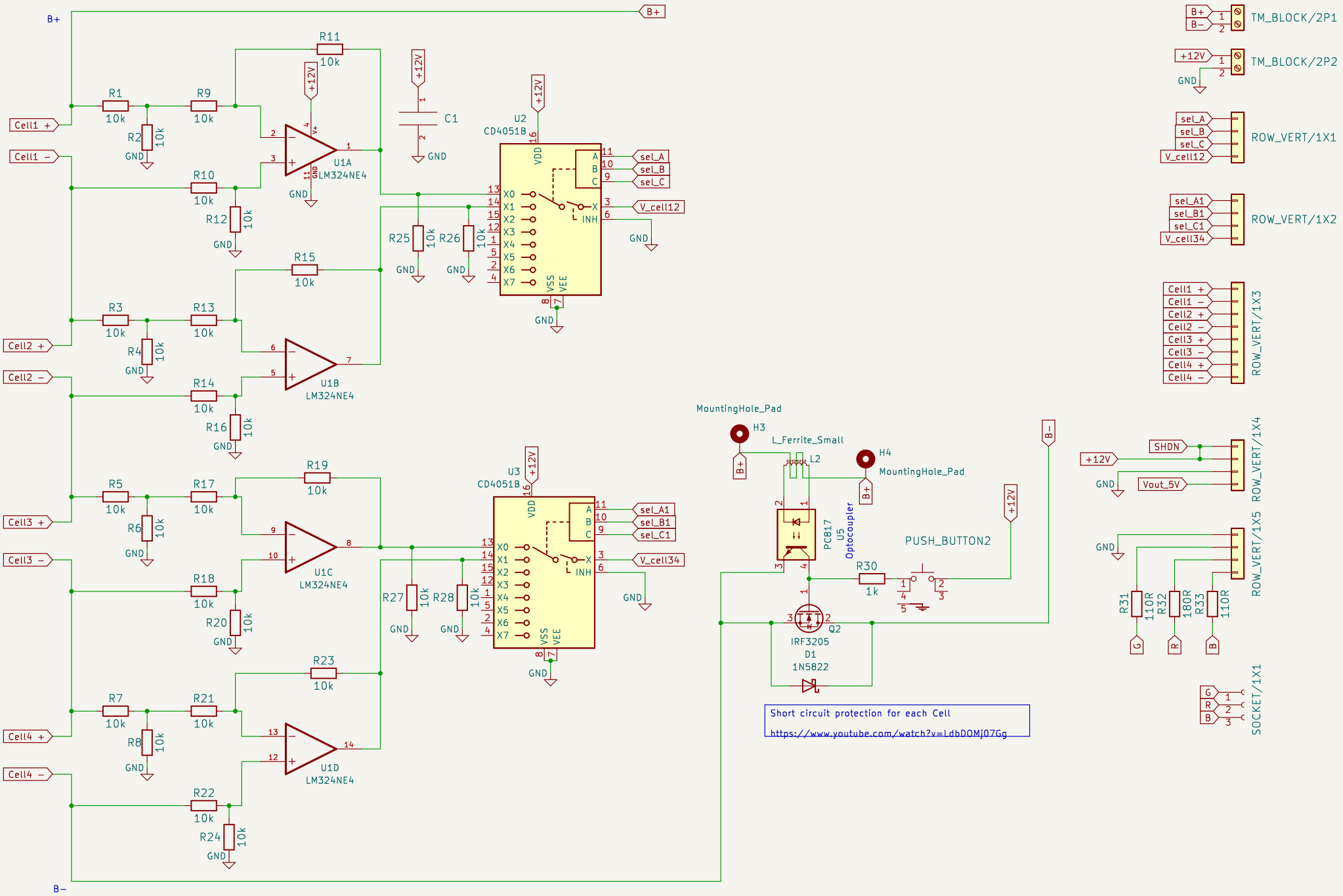
B+
B−
Cell1 +
Cell1 −
Cell2 +
Cell2 −
Cell3 +
Cell3 −
Cell4 +
Cell4 −
R1 10k
R2 10k
R3 10k
R4 10k
R5 10k
R6 10k
R7 10k
R8 10k
R9 10k
R10 10k
R11 10k
R12 10k
R13 10k
R14 10k
R15 10k
R16 10k
R17 10k
R18 10k
R19 10k
R20 10k
R21 10k
R22 10k
R23 10k
R24 10k
R25 10k
R26 10k
R27 10k
R28 10k
GND
+12V
C1
U1A LM324NE4
U1B LM324NE4
U1C LM324NE4
U1D LM324NE4
U2 CD4051B
U3 CD4051B
VDD
VSS
VEE
X0
X1
X2
X3
X4
X5
X6
X7
A
B
C
INH
sel_A
sel_B
sel_C
V_cell12
sel_A1
sel_B1
sel_C1
V_cell34
MountingHole_Pad
H3
H4
L_Ferrite_Small
L2
PC817
U5
Optocoupler
PUSH_BUTTON2
R30 1k
Q2
IRF3205
D1
1N5822
Short circuit protection for each Cell
https://www.youtube.com/watch?v=LdbDOMj07Gg
TM_BLOCK/2P1
TM_BLOCK/2P2
ROW_VERT/1X1
ROW_VERT/1X2
ROW_VERT/1X3
ROW_VERT/1X4
ROW_VERT/1X5
SHDN
Vout_5V
R31 110R
R32 180R
R33 110R
G
R
B
SOCKET/1X1