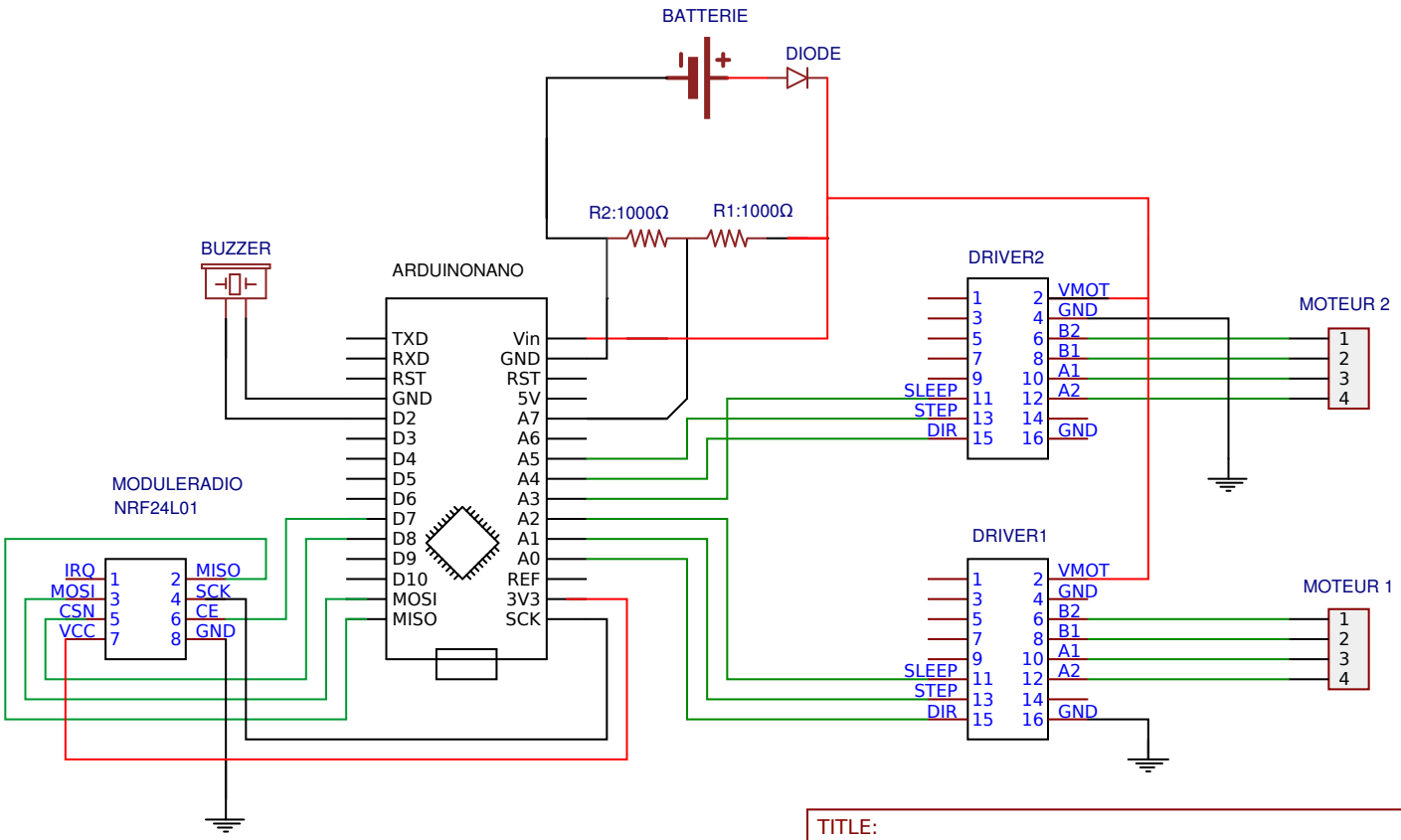

TITLE: Robot - Schématique	REV: 1.0
Date: Mai 2017	Sheet: 1/1
EasyEDA V4.4.4	Drawn By: Projet Block