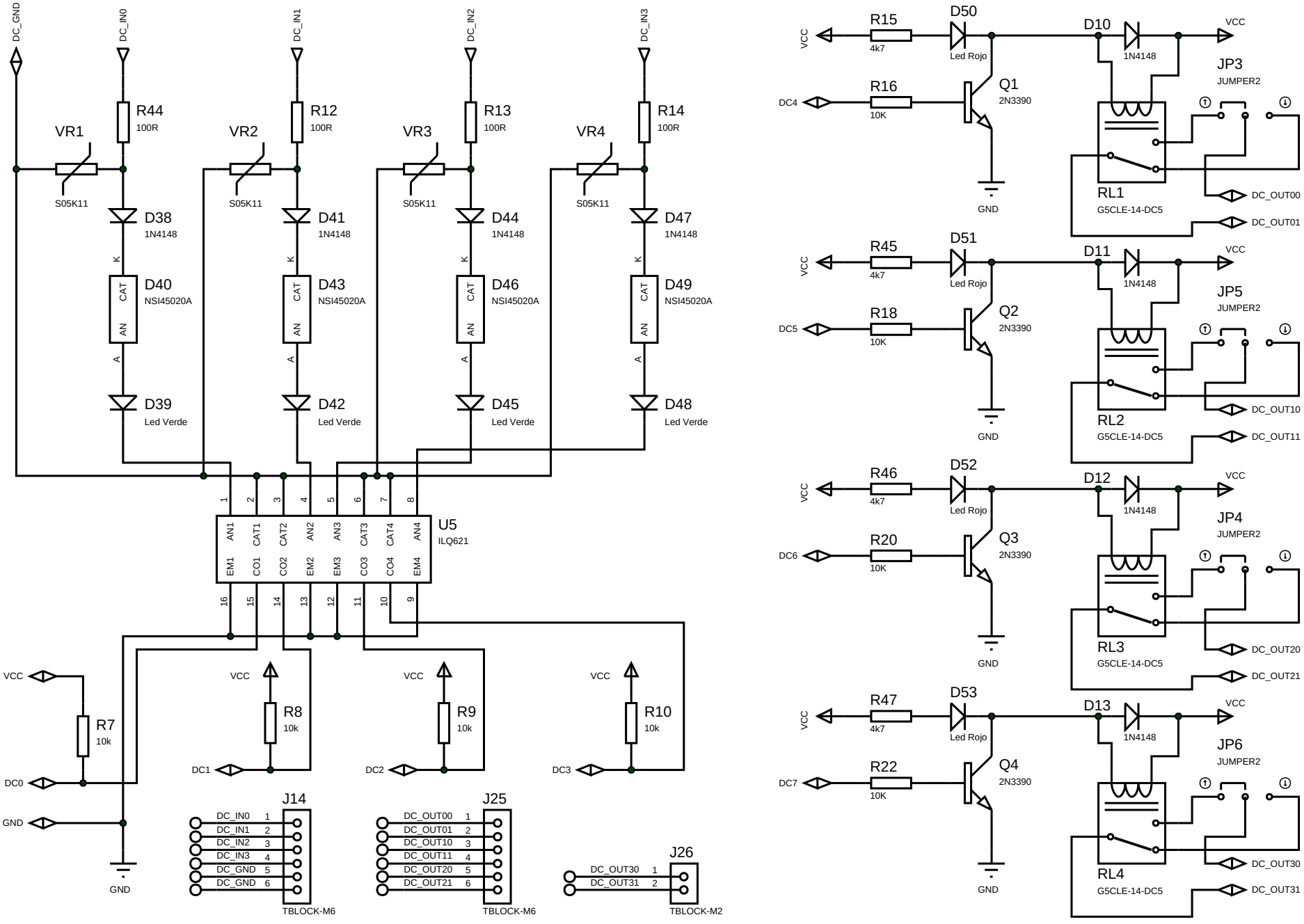
DC_GND
DC_IN0
DC_IN1
DC_IN2
DC_IN3
R44
100R
R12
100R
R13
100R
R14
100R
VR1
VR2
VR3
VR4
S05K11
D38
1N4148
D41
1N4148
D44
1N4148
D47
1N4148
D40
NSI45020A
D43
NSI45020A
D46
NSI45020A
D49
NSI45020A
K
CAT
AN
A
D39
Led Verde
D42
Led Verde
D45
Led Verde
D48
Led Verde
U5
ILQ621
AN1
CAT1
CAT2
AN2
AN3
CAT3
CAT4
AN4
EM1
CO1
CO2
EM2
EM3
CO3
CO4
EM4
VCC
R7
10k
R8
10k
R9
10k
R10
10k
DC0
DC1
DC2
DC3
GND
J14
DC_IN0
DC_IN1
DC_IN2
DC_IN3
DC_GND
DC_GND
TBLOCK-M6
J25
DC_OUT00
DC_OUT01
DC_OUT10
DC_OUT11
DC_OUT20
DC_OUT21
TBLOCK-M6
J26
DC_OUT30
DC_OUT31
TBLOCK-M2
R15
4k7
D50
Led Rojo
R16
10K
Q1
2N3390
DC4
D10
1N4148
JP3
JUMPER2
RL1
G5CLE-14-DC5
DC_OUT00
DC_OUT01
R45
4k7
D51
Led Rojo
R18
10K
Q2
2N3390
DC5
D11
1N4148
JP5
JUMPER2
RL2
G5CLE-14-DC5
DC_OUT10
DC_OUT11
R46
4k7
D52
Led Rojo
R20
10K
Q3
2N3390
DC6
D12
1N4148
JP4
JUMPER2
RL3
G5CLE-14-DC5
DC_OUT20
DC_OUT21
R47
4k7
D53
Led Rojo
R22
10K
Q4
2N3390
DC7
D13
1N4148
JP6
JUMPER2
RL4
G5CLE-14-DC5
DC_OUT30
DC_OUT31