Libre Solar BMS for 3–16 cells

Based on TI bq76952 and ESP32-C3

Development funded by EnAccess Foundation.

https://enaccess.org

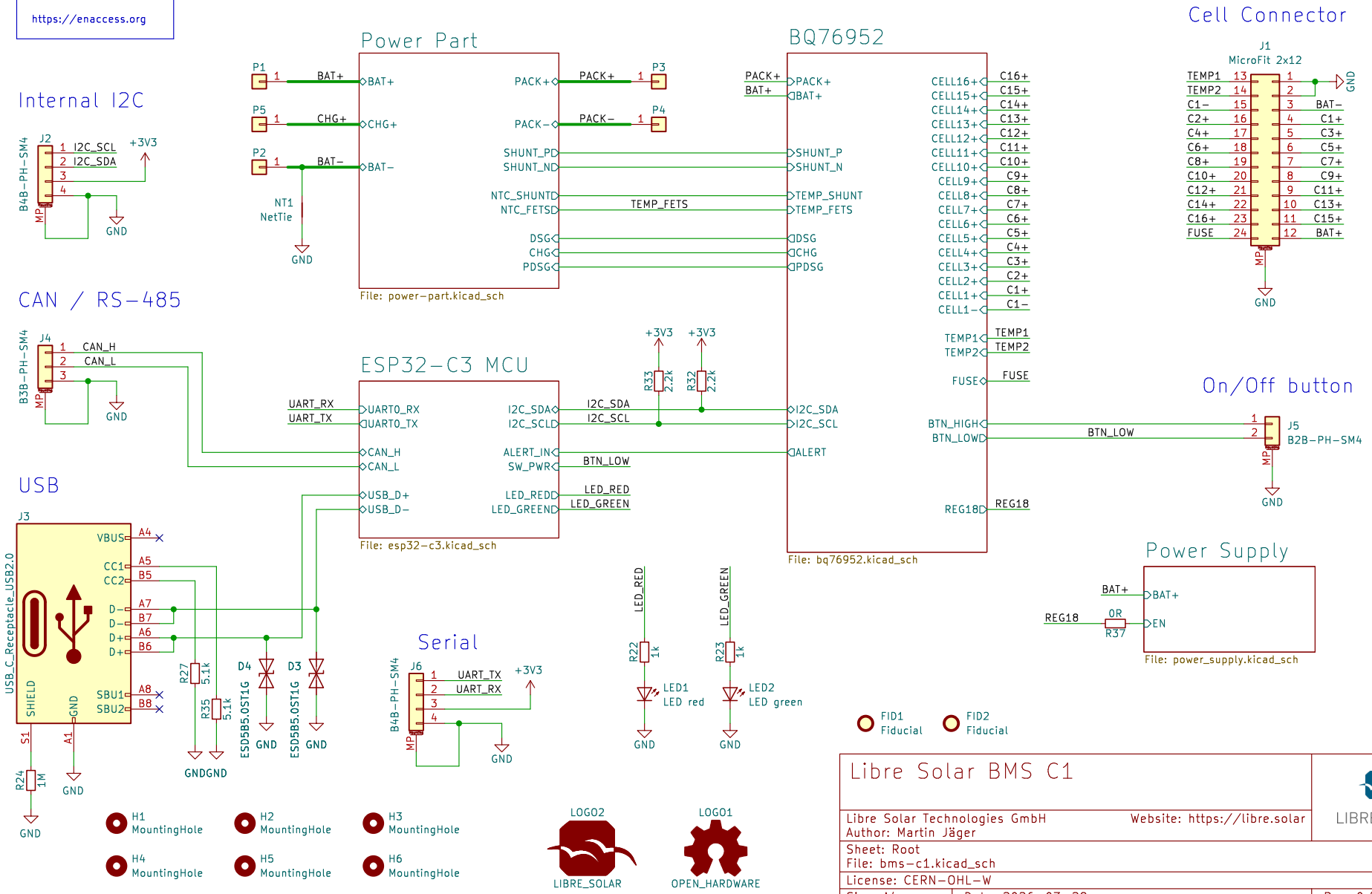

Libre Solar BMS C1	LIBRESOLAR
Libre Solar Technologies GmbH Author: Martin Jäger	Website: https://libre.solar
Sheet: Root File: bms-c1.kicad_sch	
License: CERN-OHL-W	
Size: A4 / Date: 2026-03-29	Rev: 0.4.2
KiCad E.D.A. 9.0.7	Page: 1/5

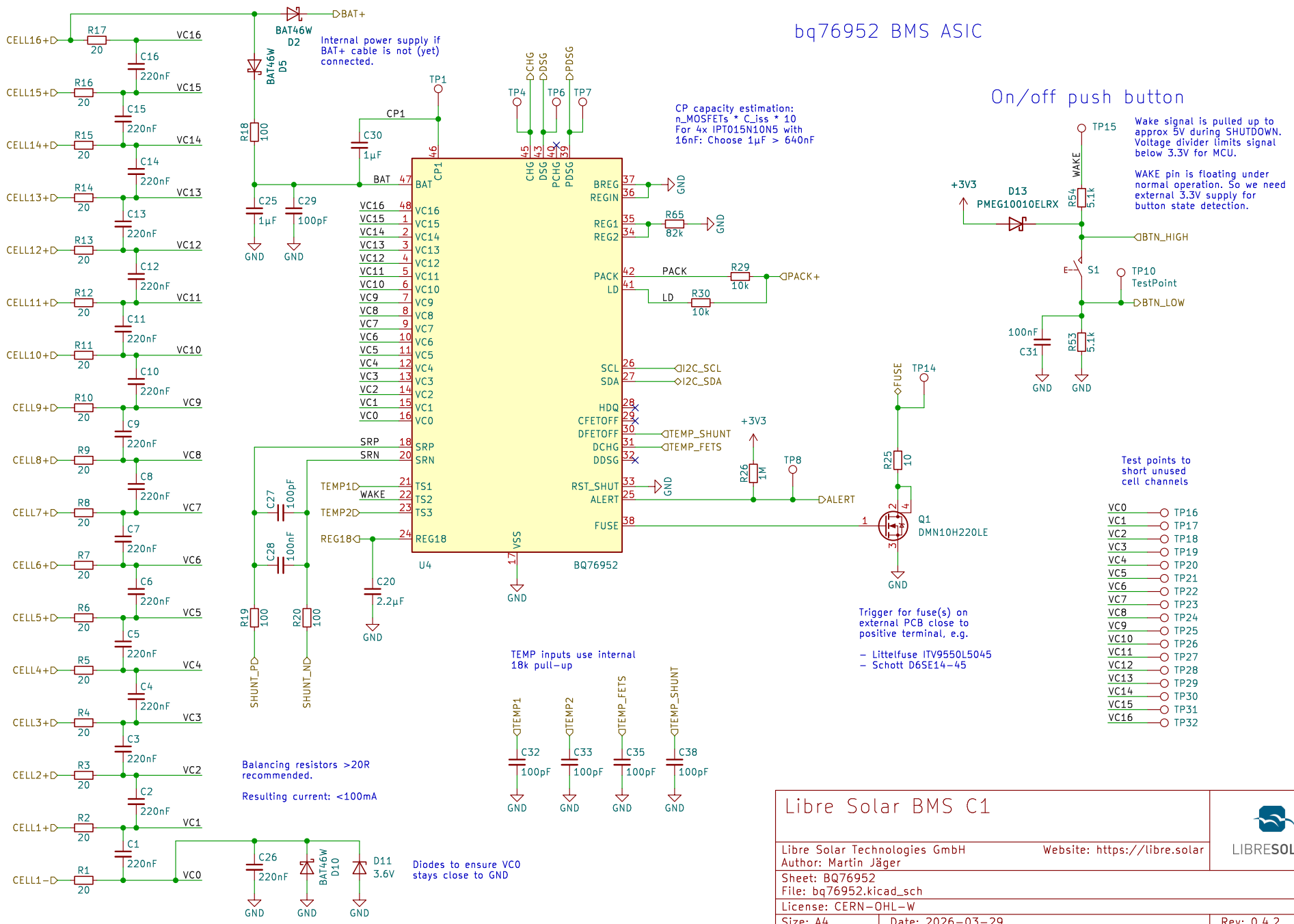
bq76952 BMS ASIC
On/off push button
BAT46W D2
BAT46W D5
Internal power supply if BAT+ cable is not (yet) connected.
CP capacity estimation: n_MOSFETs * C_iss * 10 For 4x IPT015N10N5 with 16nF: Choose 1µF > 640nF
Wake signal is pulled up to approx 5V during SHUTDOWN. Voltage divider limits signal below 3.3V for MCU.
WAKE pin is floating under normal operation. So we need external 3.3V supply for button state detection.
D13 PMEG10010ELRX
TP10 TestPoint
Test points to short unused cell channels
Trigger for fuse(s) on external PCB close to positive terminal, e.g.
– Littelfuse ITV9550L5045
– Schott D6SE14-45
Q1 DMN10H220LE
U4 BQ76952
TEMP inputs use internal 18k pull-up
Balancing resistors >20R recommended.
Resulting current: <100mA
Diodes to ensure VC0 stays close to GND
D11 3.6V
Libre Solar BMS C1
Libre Solar Technologies GmbH
Author: Martin Jäger
Website: https://libre.solar
LIBRESOLAR
Sheet: BQ76952
File: bq76952.kicad_sch
License: CERN-OHL-W
Size: A4
Date: 2026-03-29
Rev: 0.4.2
KiCad E.D.A. 9.0.7
Page: 2/5

Battery to 3.3V (SMPS)

ESP32-C3 requires power supply with at least 500 mA

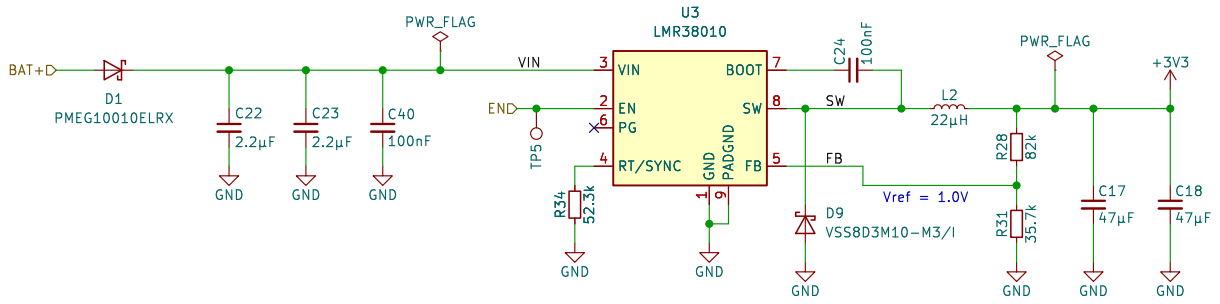

Layout for 500 kHz, 1A output

Libre Solar BMS C1	
Libre Solar Technologies GmbH Author: Martin Jäger	Website: https://libre.solar
Sheet: Power Supply File: power_supply.kicad_sch	
License: CERN-OHL-W	
Size: A4 Date: 2026-03-29	Rev: 0.4.2
KiCad E.D.A. 9.0.7	Page: 3/5

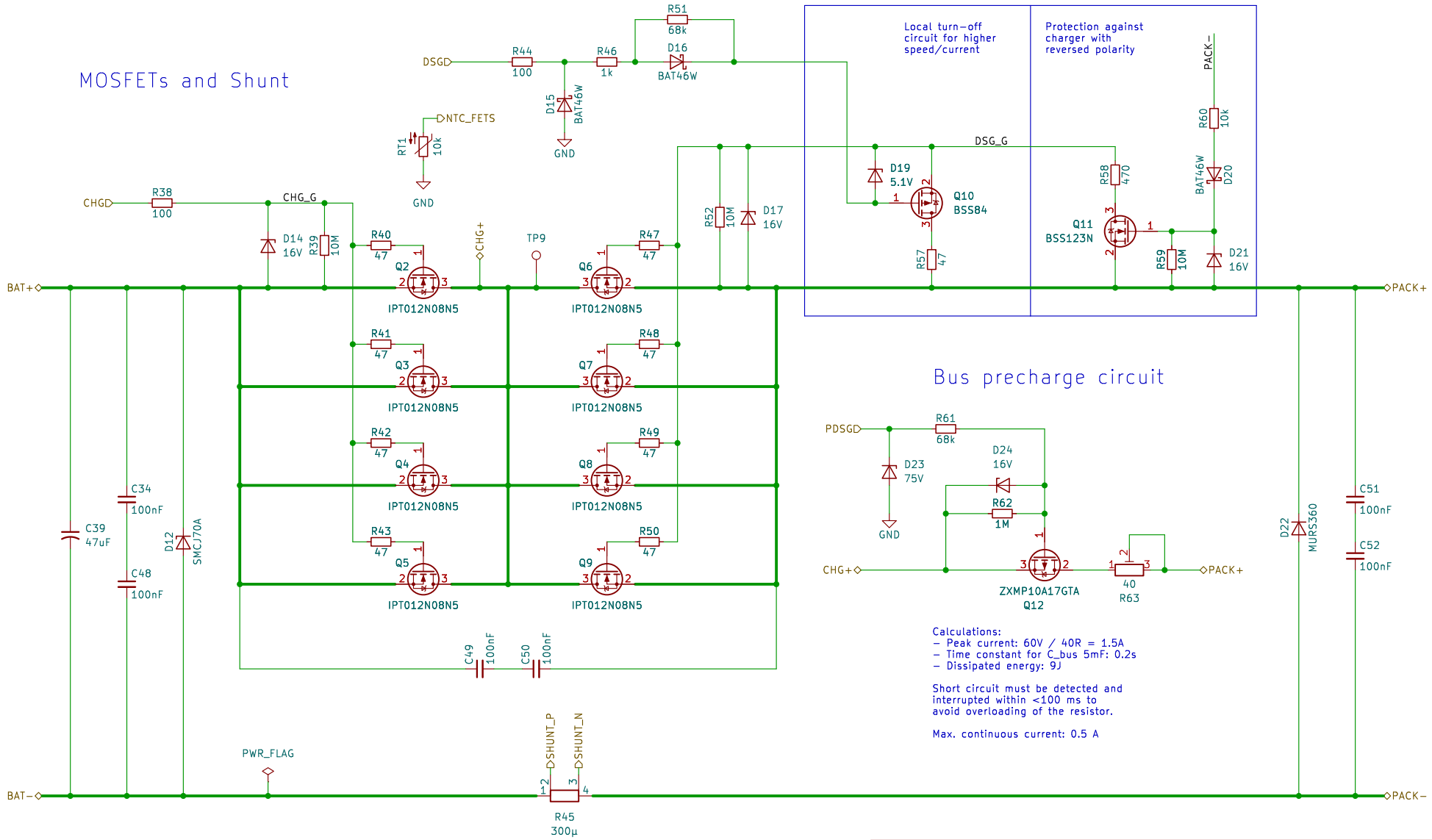

Libre Solar BMS C1

Libre Solar Technologies GmbH
Author: Martin Jäger
Website: https://libre.solar

Sheet: Power Part
File: power-part.kicad_sch

License: CERN-OHL-W

Size: A4 | Date: 2026-03-29 | Rev: 0.4.2
KiCad E.D.A. 9.0.7 | Page: 4/5

ESP32-C3 module

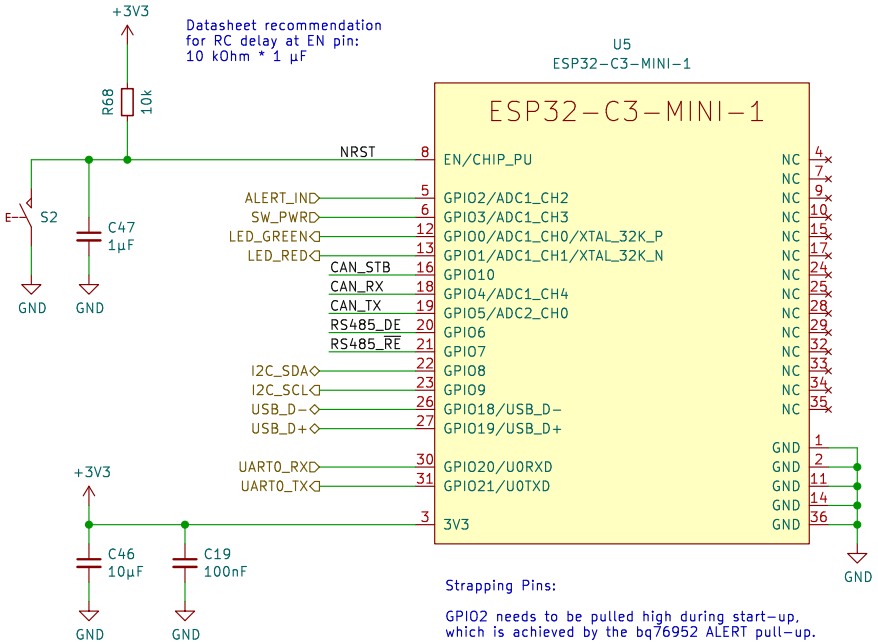

Strapping Pins:

GPIO2 needs to be pulled high during start-up, which is achieved by the bq76952 ALERT pull-up.

The I2C pull-up resistors ensure that GPIO8 and GPIO9 are pulled high during normal start-up.

Short GPIO9 to GND to enter bootloader mode.

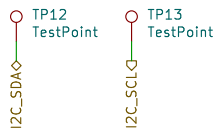

CAN transceiver

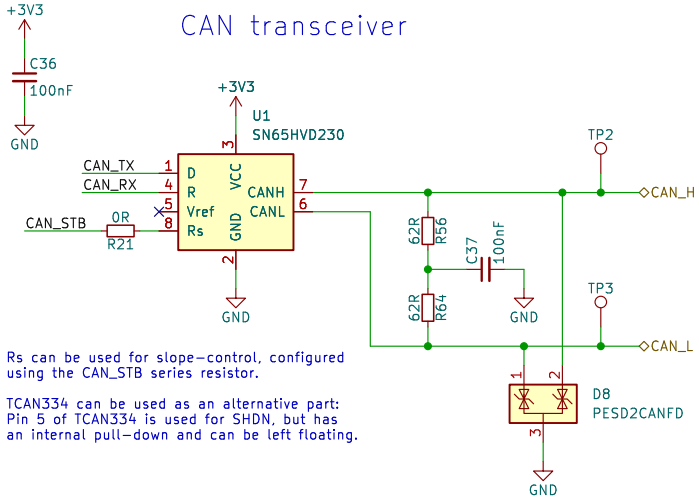

Rs can be used for slope-control, configured using the CAN_STB series resistor.

TCAN334 can be used as an alternative part: Pin 5 of TCAN334 is used for SHDN, but has an internal pull-down and can be left floating.

PESD2CAN or NUP2105L also suitable, but FD versions are more common nowadays.

RS-485 Transceiver

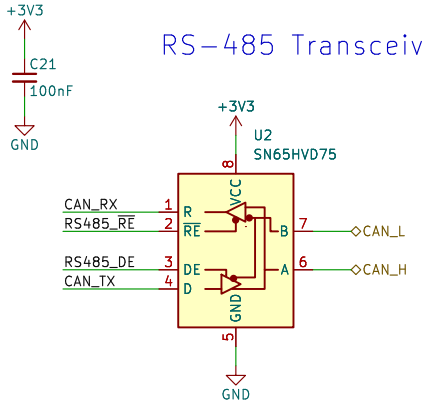

Re-uses MCU pins and bus from CAN -> only CAN or RS-485 can be used in one application.

Libre Solar BMS C1	LIBRESOLAR
Libre Solar Technologies GmbH Author: Martin Jäger	Website: https://libre.solar
Sheet: ESP32-C3 MCU File: esp32-c3.kicad_sch	
License: CERN-OHL-W	
Size: A4 / Date: 2026-03-29	Rev: 0.4.2
KiCad E.D.A. 9.0.7	Page: 5/5