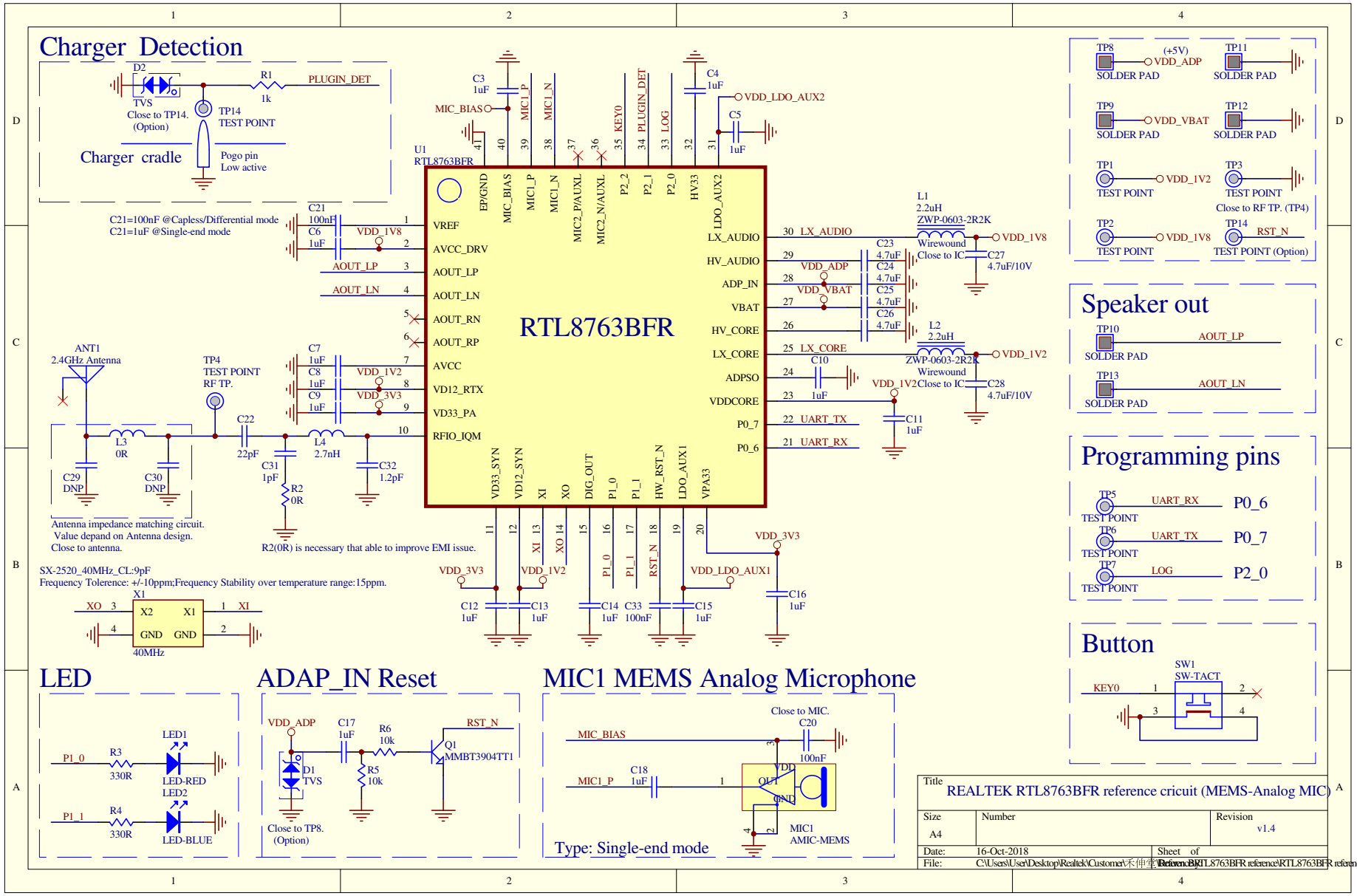
Charger Detection
D2
TVS
Close to TP14.
(Option)
R1
1k
PLUGIN_DET
TP14
TEST POINT
Charger cradle
Pogo pin
Low active
U1
RTL8763BFR
RTL8763BFR
C3
1uF
MIC_BIAS
MIC1_P
MIC1_N
KEY0
PLUGIN_DET
LOG
C4
1uF
VDD_LDO_AUX2
C5
1uF
EP/GND
MIC_BIAS
MIC1_P
MIC1_N
MIC2_P/AUXL
MIC2_N/AUXL
P2_2
P2_1
P2_0
HV33
LDO_AUX2
VREF
AVCC_DRV
AOUT_LP
AOUT_LN
AOUT_RN
AOUT_RP
AVCC
VD12_RTX
VD33_PA
RFIO_IQM
LX_AUDIO
HV_AUDIO
ADP_IN
VBAT
HV_CORE
LX_CORE
ADPSO
VDDCORE
P0_7
P0_6
VD33_SYN
VD12_SYN
XI
XO
DIG_OUT
P1_0
P1_1
HW_RST_N
LDO_AUX1
VPA33
C21=100nF @Capless/Differential mode
C21=1uF @Single-end mode
C21
100nF
C6
1uF
VDD_1V8
AOUT_LP
AOUT_LN
ANT1
2.4GHz Antenna
TP4
TEST POINT
RF TP.
C7
1uF
C8
1uF
C9
1uF
VDD_1V2
VDD_3V3
C22
22pF
L3
0R
C29
DNP
C30
DNP
C31
1pF
R2
0R
L4
2.7nH
C32
1.2pF
Antenna impedance matching circuit.
Value depand on Antenna design.
Close to antenna.
R2(0R) is necessary that able to improve EMI issue.
SX-2520_40MHz_CL:9pF
Frequency Tolerence: +/-10ppm;Frequency Stability over temperature range:15ppm.
X1
X2
X1
GND
GND
XO
XI
40MHz
VDD_3V3
VDD_1V2
VDD_LDO_AUX1
C12
1uF
C13
1uF
C14
1uF
C33
100nF
C15
1uF
C16
1uF
L1
2.2uH
ZWP-0603-2R2K
Wirewound
Close to IC
VDD_1V8
C23
4.7uF
C24
4.7uF
C25
4.7uF
C26
4.7uF
C27
4.7uF/10V
VDD_ADP
VDD_VBAT
L2
2.2uH
ZWP-0603-2R2K
Wirewound
Close to IC
VDD_1V2
C10
1uF
C28
4.7uF/10V
C11
1uF
UART_TX
UART_RX
LED
P1_0
R3
330R
LED1
LED-RED
P1_1
R4
330R
LED2
LED-BLUE
ADAP_IN Reset
VDD_ADP
C17
1uF
R6
10k
RST_N
Q1
MMBT3904TT1
D1
TVS
R5
10k
Close to TP8.
(Option)
MIC1 MEMS Analog Microphone
Close to MIC.
C20
100nF
MIC_BIAS
MIC1_P
C18
1uF
VDD
OUT
GND
MIC1
AMIC-MEMS
Type: Single-end mode
TP8
(+5V)
VDD_ADP
SOLDER PAD
TP11
SOLDER PAD
TP9
VDD_VBAT
SOLDER PAD
TP12
SOLDER PAD
TP1
VDD_1V2
TEST POINT
TP3
TEST POINT
Close to RF TP. (TP4)
TP2
VDD_1V8
TEST POINT
TP14
RST_N
TEST POINT (Option)
Speaker out
TP10
AOUT_LP
SOLDER PAD
TP13
AOUT_LN
SOLDER PAD
Programming pins
TP5
UART_RX
P0_6
TEST POINT
TP6
UART_TX
P0_7
TEST POINT
TP7
LOG
P2_0
TEST POINT
Button
SW1
SW-TACT
KEY0
Title
REALTEK RTL8763BFR reference cricuit (MEMS-Analog MIC)
Size
A4
Number
Revision
v1.4
Date:
16-Oct-2018
Sheet of
File:
C:\Users\User\Desktop\Realtek\Customer\禾伸堂\RTL8763BFR reference\HerTzek\RTL8763BFR reference.ddb