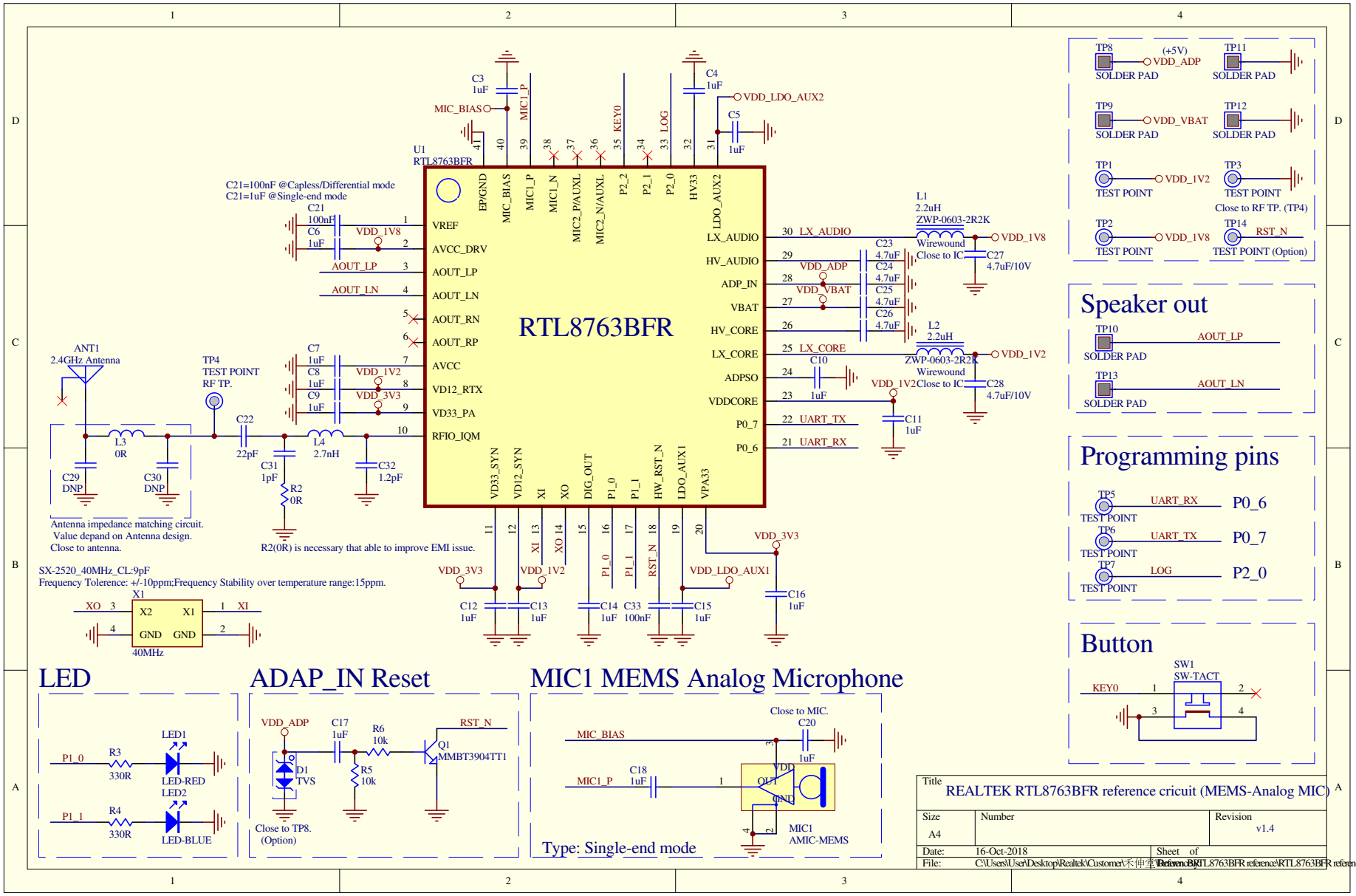
RTL8763BFR
U1
RTL8763BFR
C21=100nF @Capless/Differential mode
C21=1uF @Single-end mode
ANT1
2.4GHz Antenna
TP4
TEST POINT
RF TP.
Antenna impedance matching circuit.
Value depand on Antenna design.
Close to antenna.
R2(0R) is necessary that able to improve EMI issue.
SX-2520_40MHz_CL:9pF
Frequency Tolerence: +/-10ppm;Frequency Stability over temperature range:15ppm.
X1
40MHz
L1
2.2uH
ZWP-0603-2R2K
Wirewound
Close to IC
L2
2.2uH
ZWP-0603-2R2K
Wirewound
Close to IC
VDD_LDO_AUX2
VDD_1V8
VDD_1V2
VDD_3V3
VDD_LDO_AUX1
MIC_BIAS
LX_AUDIO
HV_AUDIO
ADP_IN
VBAT
HV_CORE
LX_CORE
ADPSO
VDDCORE
P0_7
P0_6
UART_TX
UART_RX
LED
LED1
LED-RED
LED2
LED-BLUE
ADAP_IN Reset
VDD_ADP
RST_N
Q1
MMBT3904TT1
D1
TVS
Close to TP8.
(Option)
MIC1 MEMS Analog Microphone
Close to MIC.
MIC1
AMIC-MEMS
Type: Single-end mode
TP8
TP11
TP9
TP12
TP1
TP3
TP2
TP14
SOLDER PAD
TEST PINT
TEST POINT (Option)
Close to RF TP. (TP4)
Speaker out
TP10
TP13
AOUT_LP
AOUT_LN
Programming pins
TP5
TP6
TP7
P0_6
P0_7
P2_0
Button
SW1
SW-TACT
KEY0
Title
REALTEK RTL8763BFR reference cricuit (MEMS-Analog MIC)
Size
A4
Number
Revision
v1.4
Date: 16-Oct-2018
Sheet of
File: C:\Users\User\Desktop\Realtek\Customer\禾伸堂\Reference\RTL8763BFR reference\HerTzek\RTL8763BFR reference.ddb