Energy Storage System (ESS) Version 1 Design/Docs

Vehicle Track-Worthiness Documentation

2023 Vehicle

Rev. 1 **2023**

Report Date:	July 21st, 2023
Release For:	Public Release
Compiled By:	*M. Talamantez, E. Brennan, A. Rodriguez, L. Caragiulo, A. Mehrotra, J. George-Akpenyi, T. Nagashima, P. Hererro-Marques, E. Beltran, E. Jackson, M. Al-Obaidi, M. Ladolcetta, A. Marschner, C. Ly, A. Slocum*
Certification of Release:	The following report was compiled by the **MIT Electric Vehicle Team** for documentation of the **Version 1 Energy Management System** for the **Hydrogen Bike Project**. It is provided as-is, and open source under a **Creative Commons Attribution 4.0 Share-Alike International License** in an effort to educate the community, industry, and others about our efforts to design and develop safe vehicles. We ask that you use this documentation for learning, and for good.

Report Record

System-Level Overview **4**

Energy Storage Systems for FCEVs 4

The Concept of Frequency Decoupling 5

Documentation Overview 5

Battery Cell Selection **6**

Lithium-Ion Battery Types and Cell Options 6

SPIM08HP Cell Choice 6

SPIM08HP Cell Information Tables 7

Battery Cell Testing 7

Mechanical Drawing of SPIM08HP Cell 8

Final Battery Cell Configuration 8

Mechanical Design of the ESS **9**

Mechanical Design and Structure 9

Bus-Bar Design and Layout 10

Pack Assembly and Manufacturing **12**

Preparing Cells for Pack-Assembly 12

Insulation and Short-Circuit Protection 12

Ingress Protection 14

Mechanical Structure 14

Mounting the ESS to the Bike 15

Battery Management System **17**

Notes from BMS Installation and Precautions 18

Testing BMS Power Usage Over Time 20

Mechanical Mounting of the BMS 20

Notes for Future Versions **21**

Acknowledgements **23**

System-Level Overview

The Energy Storage Systems (ESS) is a critical component of a Fuel Cell Electric Vehicle (FCEV). Let's look at the below diagram to understand its role in a little more detail.

Energy Storage Systems for FCEVs

The ESS sits in a "parallel configuration" with the fuel-cell/fuel-cell power electronics, and the propulsion system. In most FCEVs, the fuel-cell is sized to provide low-frequency, steady-state power, while the ESS is designed to handle regenerative braking currents, and mid to high-frequency, and transient power draw.[1] ESS systems can be a bank of super-capacitors and associated power electronics, but until capacitor technology develops further, Lithium Batteries are often used for the ESS. We chose a lithium-battery as our ESS for version 1 because there's a high-level of knowledge on our team surrounding batteries and battery design, lithium batteries are inexpensive to build, and extremely power dense. A simple lithium-battery ESS would allow us to extract all the data we need during the initial prototyping phase. A super-capacitor design would complicate the implementation process at the moment while adding little research value at this stage of the project.[2]

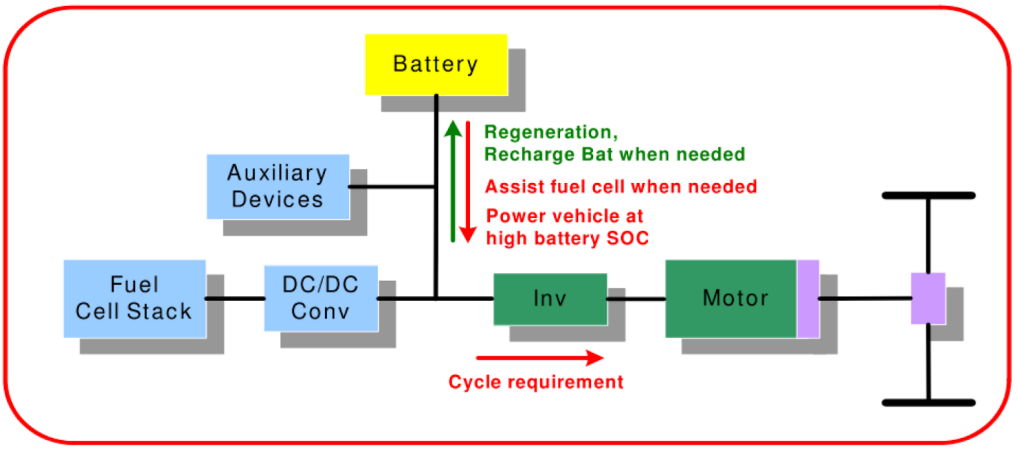

[1] https://doi.org/10.1109/ACCESS.2022.3167054
[2] https://doi.org/10.3390/app9112296

The Concept of Frequency Decoupling

Before we move on, let's clarify a little what we mean by "high-frequency" and "low-frequency" power because it's important to understand for the context of this discussion. If we assume the vehicle is moving at a constant velocity, theoretically the power-draw from the motor remains a constant or "low-frequency." But due to things like variation in the driver's foot position on the pedal, irregularities in the surface of the road, rolling resistance, aerodynamic force, and events such as acceleration and deceleration, "high-frequency" noise is introduced. This kind of "spiky" current draw is not good for fuel-cell lifetime and performance, so the role of the ESS is to handle this kind of current-draw to maximize fuel-cell lifetime.[5] Additionally, since fuel-cells only convert hydrogen gas into electric energy, they don't have "charge-storage capability" per-se, so they cannot accept regenerative braking currents from the motor. The ESS handles this as well.

Documentation Overview

The rest of this document is devoted to the detailed design of the version 1 ESS for the hydrogen-fuel cell bike. It will provide information on high-level functional requirements, the cells we used, cell testing and impedance matching, the BMS we used, mechanical design, manufacturing, and other miscellaneous notes taken along the way.

Battery Cell Selection

The following section contains information on battery cell selection, and the goals for cell selection. It also contains some basic information on Lithium-Ion batteries.

Lithium-Ion Battery Types and Cell Options

Lithium-Ion battery packs are a common energy storage system for electric vehicles due to their high power-density (ability to release large amounts of energy from a small mass). A great resource on these batteries is linked in the footnote.[3] Battery packs are made of individual cells connected in series or parallel configuration, and these cells can vary widely in size, specific chemistry, packaging, and more. In general, most electric vehicles use cylindrical cells which are generally more stable and safer than alternatives. Drones and hobby-grade RC vehicles use lithium pouch cells which have much lower internal resistance, and therefore higher power-output. They also lack the metal structure of cylindrical cells which increases their energy density. However, these cells tend to be more volatile from a safety perspective. In electric vehicles, cells are generally assembled by spot-welding batteries that are contained in a mechanical structure to nickel strips to create electrical conductivity.

SPIM08HP Cell from batteryhookup.com

SPIM08HP Cell Choice

For our initial prototype battery, we wanted to minimize assembly time while also maximizing power output, and energy density of the entire pack. For these reasons we chose to use the SPIM08HP pouch cells which have screw-terminal bus-bar connections built into the pack (hence the connections between cells do not have to be spot-welded). Their modular design makes stacking and securing them easy, minimizing the amount of mechanical work we would have to do for the initial prototype.

The SPIM08HP cells are 3.7V nominal, 16Ah cells that were purchased from Battery Hookup. These cells use a Lithium Ion cell

[3] https://batteryuniversity.com/articles

chemistry and are rated at 2000 cycles. We chose a 12S2P configuration for our battery (meaning 12 in series and 2 parallel) to give us a 48V nominal voltage, and a total capacity of 32Ah resulting in an estimated energy content of 1.5kWh. The 12s configuration was selected to match the fuel-cell output voltage of 50V regulated, the 2p configuration was selected based on the maximum number of cells that could be fit into a given “reasonable volume” on the bike. See tables below for additional cell information.

SPIM08HP Cell Information Tables

Mechanical Properties	
Cell Dimensions (in)	8 5/8 x 5 5/8 by 3/4
Working Charge Temp. (°C)	0 to 50
Working Discharge Temp. (°C)	-20 to 50
Storage Temp. (°C)	-20 to 50
Electrical Characteristics	
Typical Capacity (Ah)	16
Minimum Cell Voltage (V)	2.5
Nominal Voltage (V)	3.7
Maximum Cell Voltage (V)	4.2
Max Charge Rate (A)	240
Max Continuous Discharge Rate (A)	400
3-second Pulse Discharge Rate (A)	800

Battery Cell Testing

Impedance matching is a crucial aspect when it comes to the design and integration of battery cells and a battery pack within an Energy Storage System (ESS). In simple terms, impedance refers to the opposition that an electrical circuit presents to the flow of alternating current (AC), as AC approaches low-frequencies (or direct current) this term is called resistance. When dealing with multiple battery cells connected in series or parallel configuration, it is essential to ensure that their internal impedance levels are properly matched. This matching process aims to achieve uniform current distribution and voltage balancing among the cells, maximizing their overall performance and lifespan.

We have written a separate document on cell testing, and impedance matching which is available at this link and on the EVT website. It contains the exact procedure and matching details for the version 1 ESS.

Mechanical Drawing of SPIM08HP Cell

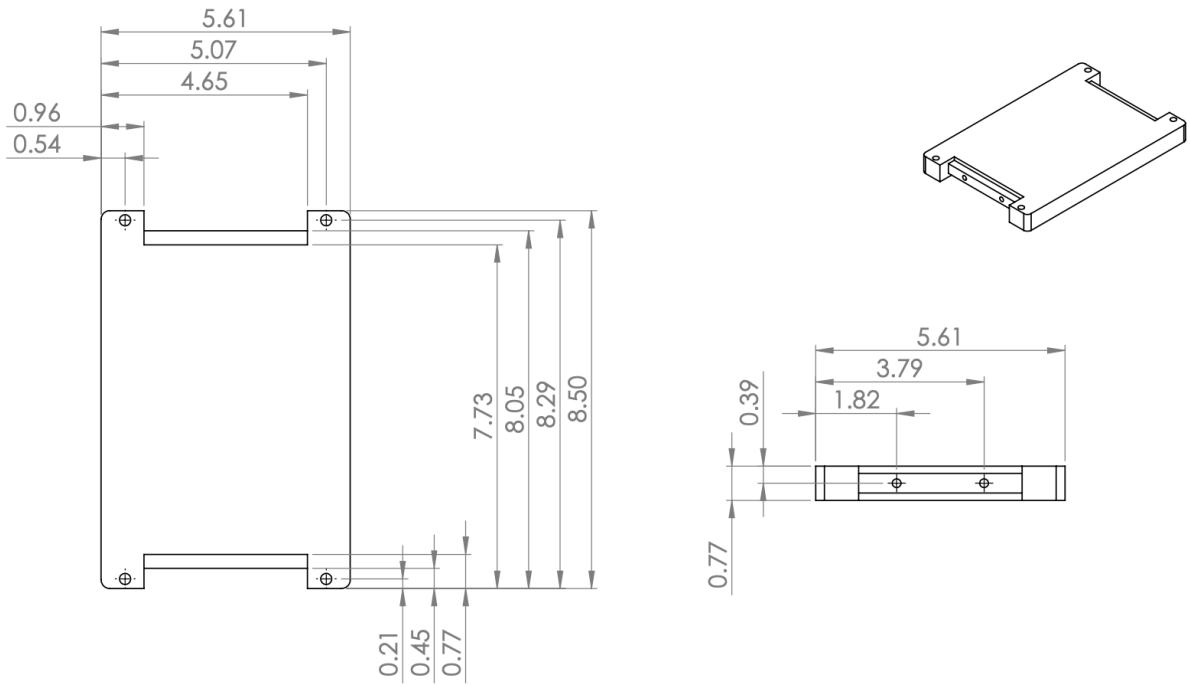

Final Battery Cell Configuration

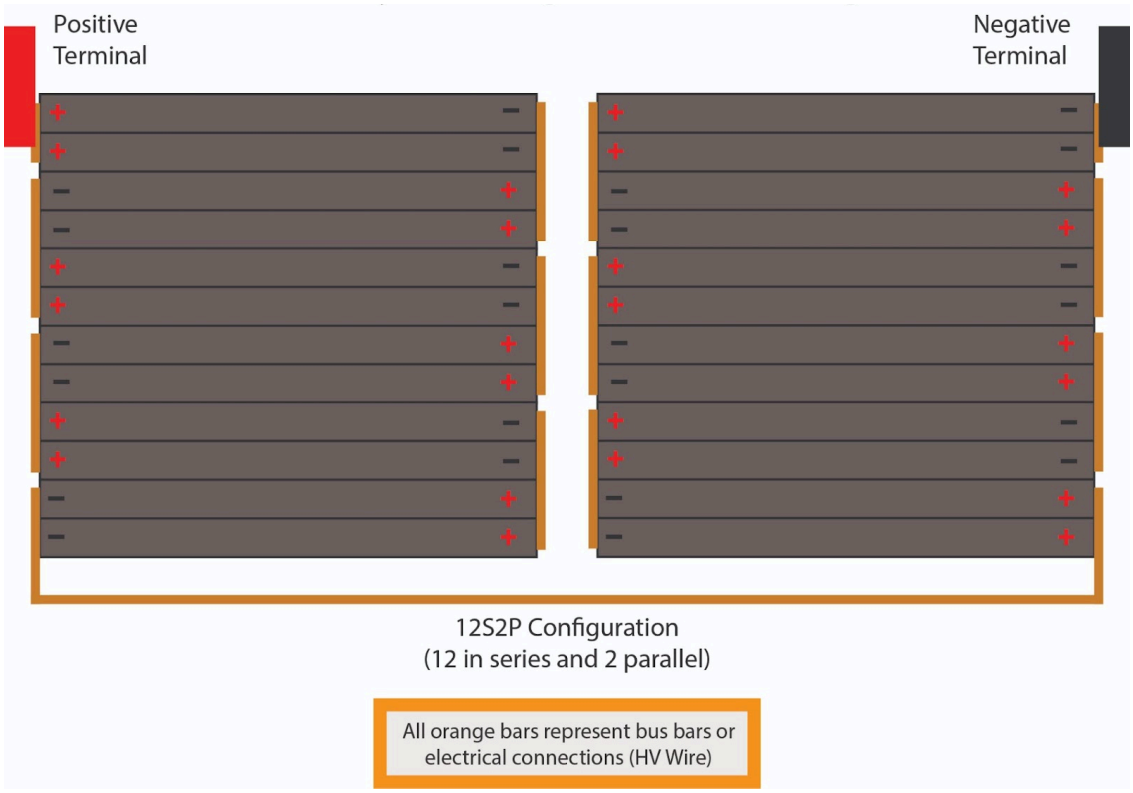

Mechanical Design of the ESS

The following section describes the design of the battery box. A STEP file CAD is available here.

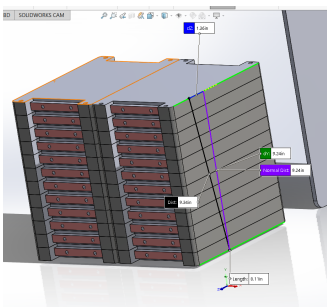

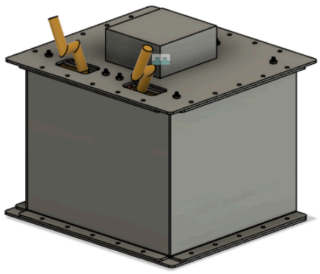

Mechanical Design and Structure

The battery box is made of a series of bent 5052 aluminum sheet metal panels. Research into the optimal materials for battery boxes showed that steel may be better for strength and security.[4][5] For ease of manufacturing and reduced cost, we chose aluminum which still maintained the required strength of the overall design.

The images to the left are CAD drawings from the battery design. The battery box is made of (6x) main plates that are designed to protect the cells from the environment. The main structure comes from the front and back plates, and the cells themselves. The SPIM08HP cells have a structural plastic shell with ¼-20" through-holes which allow them to be stacked, and assembled using threaded rods.[6] The front and back plate of the battery sit flush with the cells and have hole patterns that align with the hole patterns of the SPIM08HP's. ¼-20" threaded rods are then driven through this assembly and pre-loaded with nylon lock-nuts on either end to provide the main structure of the battery. The four "side plates" are mostly for encasing and protection and bolt straight to the main front and back plates (using M6 bolts, and nylon lock-nuts). Two holes are cut in the front plate for the main B+/B- wires to exit the pack.

In general, we recommend the use of socket-head cap screws, because of their low chance of stripping. Stripped screws can send unwanted metal-flakes into the battery which is dangerous for assembly.

---

[4] https://gmk.center/wp-content/uploads/2021/10/2021-Eng-Metallurgy_Green-Transition.pdf

[5] https://ideaexchange.uakron.edu/cgi/viewcontent.cgi?article=2254&context=honors_research_projects#:~:text=A%20problem%20arises%20when%20two,the%20metal%20with%20lesser%20nobility

[6] **Important Note—** Lithium Ion pouch cells generally require a specific "compression" or lateral pre-load to ensure proper operation. Without compression, thermal expansion could result in cells "pushing" on each other inside the battery pack. The SPIM08HP cells come with a plastic casing which maintains the correct compression when preloaded with threaded rods. It's important not to tighten these rods too much otherwise you could damage the cell.

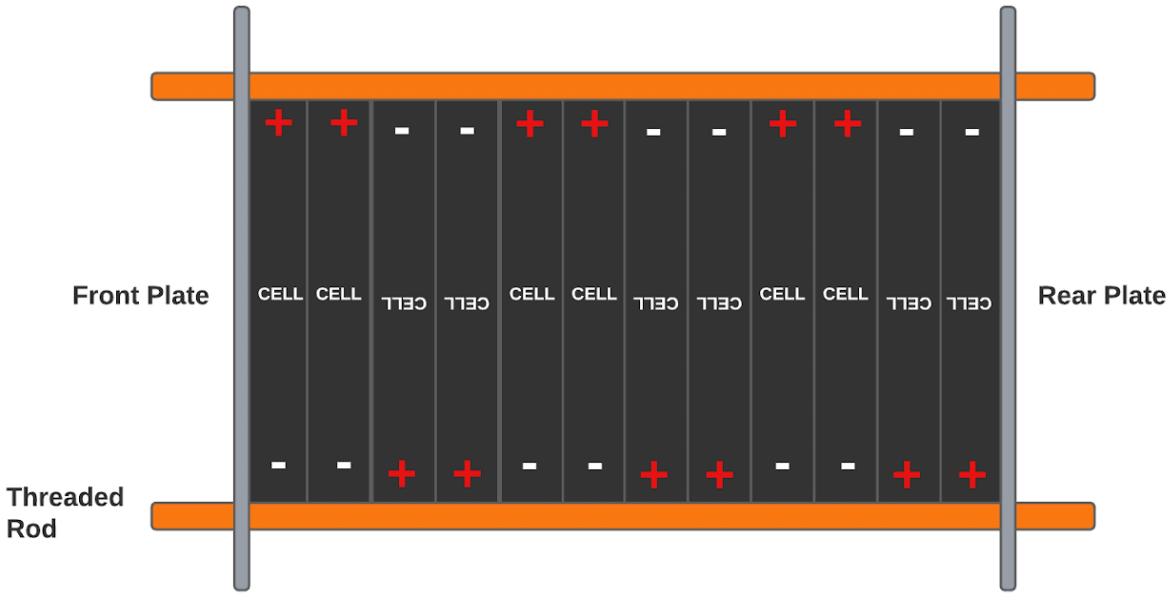

Bus-Bar Design and Layout

Bus-bars are copper plates that electrically connect main components of the battery together. In this case, the bus-bars connect the cells both in series and parallel. For a 12s2p pack, the design groups pairs of cells in parallel, and alternates the orientation of these pairs to generate a 6s configuration of two modules. These two modules are placed next to each other, and wired together with a 1 AWG wire to create the 12s configuration.

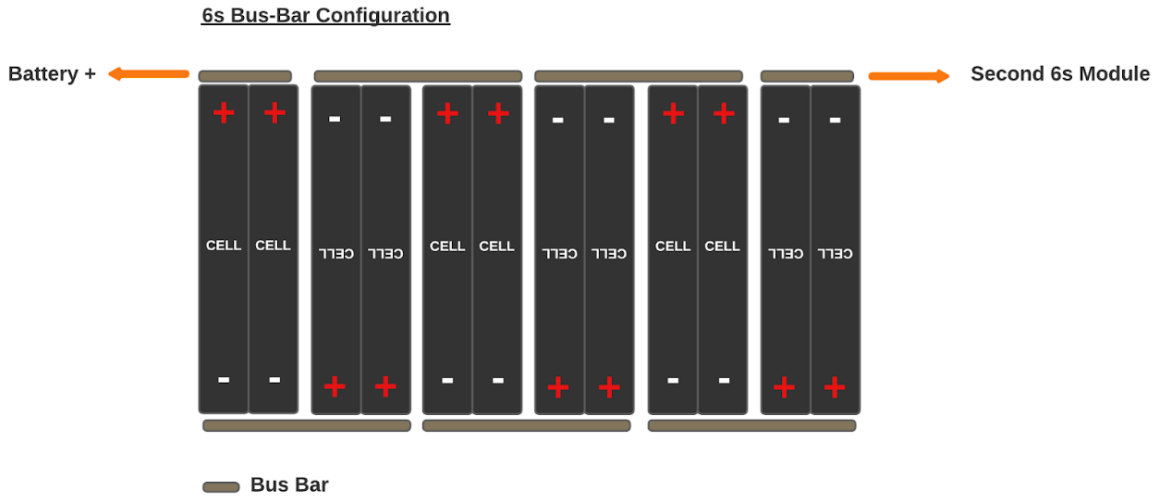

The above diagram shows how one of the two “modules” of cells in the battery is arranged with bus-bars included. The bus-bars were designed to fit the holes of the SPIM08HP cells. Two of these 6s modules are wired together in series in the battery to create the 12s2p configuration. The bus-bar thickness was chosen to be 3/16” and the width was chosen to be 3” wide which gives us a cross-sectional current-flow area of 0.5625.” This is equivalent to a copper wire with a 0.4” radius, which is around twice as big as 0000 gauge wire (which has a current capacity of 300A). This gives the bus bars an estimated current capacity of around 600A.[7]

[7] https://www.powerstream.com/Wire_Size.htm

Pack Assembly and Manufacturing

The following section describes the actual manufacturing process of the version 1 ESS.

Preparing Cells for Pack-Assembly

During the pre-assembly phase, we carefully arranged the cells into their designated stacks, taking care to align them properly and maintain our desired configuration. Additionally, we attached the bus bars onto each connection required for interconnecting the cells within the stack. This involved securing the bus bars to the appropriate terminals on the cells, ensuring a reliable electrical connection.

Throughout this process, we prioritized safety. To maintain a safe working environment, we limited the number of us involved in handling the batteries simultaneously. This approach helped to minimize the risk of accidents and potential errors during assembly. Furthermore, we followed safety protocols, such as applying electrically insulating tape to our tools, to prevent any unintended short circuits or electrical hazards. Triple-checking the connections became a vital practice in ensuring the accuracy and correctness of our assembly. We meticulously verified each connection among us, emphasizing clear communication.

Insulation and Short-Circuit Protection

During the battery assembly process, we exercised the utmost caution to prevent any potential short circuits between the cells. Short circuits can lead to severe damage to the cells and pose significant safety risks or lead to fire.

One important step we took was applying hot glue around the bus bars of the cell terminals. This additional layer of insulation acted as a protective barrier between the bus bars, reducing the likelihood of accidental contact. By applying a physical barrier of hot glue, we could also protect against loose parts if something happened to come loose due to vibration. In the future, we would

further insulate the bus bars with electrical tape and/or FR4 spacers instead.

Furthermore, we prioritized insulation within the battery housing to prevent any contact between conducting surfaces and to mitigate the risk of short circuits. To achieve this, we utilized Kapton tape, which we applied to all the inside faces of the aluminum housing. Kapton tape, known for its excellent electrical insulation properties, acted as a reliable insulating layer, effectively isolating the conducting components and minimizing the risk of accidental electrical contact.

Additionally, we incorporated FR4 material to line the inside of the battery box, particularly on the face that housed critical connections such as the HV wire connecting the two modules and the terminals leading to the Battery Management System (BMS). FR4, a flame-retardant glass-reinforced epoxy laminate, possesses high electrical insulation properties and mechanical strength. By using FR4 as a lining material, we further reinforced insulation and created a protective barrier to safeguard against short circuits.

Ingress Protection

Ingress Protection, commonly referred to as IP rating, is a standardized measure used to assess the level of protection provided by an enclosure against the intrusion of solids and liquids. It is represented by an IP followed by two digits, where the first digit indicates the level of protection against solids, and the second digit indicates the level of protection against liquids.

In our case, the battery has a solid protection rating of approximately 4, implying a high level of protection against solid objects such as dust, debris, or small particles. This rating ensures that the battery enclosure is designed to prevent the ingress of most solid materials that could potentially affect the performance or safety of the system.

Regarding liquids, our battery currently has a liquids protection rating of approximately 0. This means that it does not provide specific protection against the intrusion of liquids such as water. However, it is important to note that for the initial iteration of our project, we do not plan on operating the system in rainy conditions or exposing it to significant liquid exposure. The system will be operated in a lab setting, until version 2 of the battery is developed. Together, the system is IP40 rated.

While a higher liquid protection rating would be desirable for situations where exposure to moisture or water is expected, it is acceptable for our initial prototype given the intended operating conditions. As we continue to refine and develop the system, we plan on enhancing the liquids protection rating to ensure the battery's resilience in various environmental conditions, including potential exposure to moisture or rain.

Mechanical Structure

Upon completion of the CAD design, we proceeded with the manufacturing process, starting with water jetting the necessary aluminum sheets and performing the bending in-house using a brake. However, we encountered challenges during the bending process as it proved difficult to achieve accuracy in the bends. Aligning the lines on the brake to ensure precise bending at the desired locations proved more challenging than anticipated. As a result, we encountered issues with the correct fitment of the walls when assembling the box, primarily due to slight deviations in the bending locations. To address this, we made necessary adjustments by re-drilling some holes and re-machining some already bent parts, ensuring a proper fit.

After wrapping the important sides of the walls with Kapton tape, we proceeded to assemble the box and securely bolted down the cells inside the battery box.

For the assembly process, we utilized M6 bolts on all sides of the battery box and employed ¼-20 rods and bolts to secure the cells within the box. Leveraging BatteryHookup.com's cell design, which incorporated provisions for rods passing through the cell cases, we integrated this feature into our battery box design to prevent any movement or displacement of the cells.

It is worth noting that the CAD model does not include clamping or frame fastening components. The decision regarding the precise location for mounting the battery to the bike frame was not finalized during the battery design phase. Consequently, the mounting mechanism to attach the battery to the frame was designed and manufactured separately after the completion of the battery box. We utilized water-jet 6061 aluminum and incorporated two L-extrusions to facilitate mounting onto the battery box. To ensure a robust and secure connection, we employed heavy-duty tube clamps, which were conveniently sourced from a reliable supplier on Amazon.

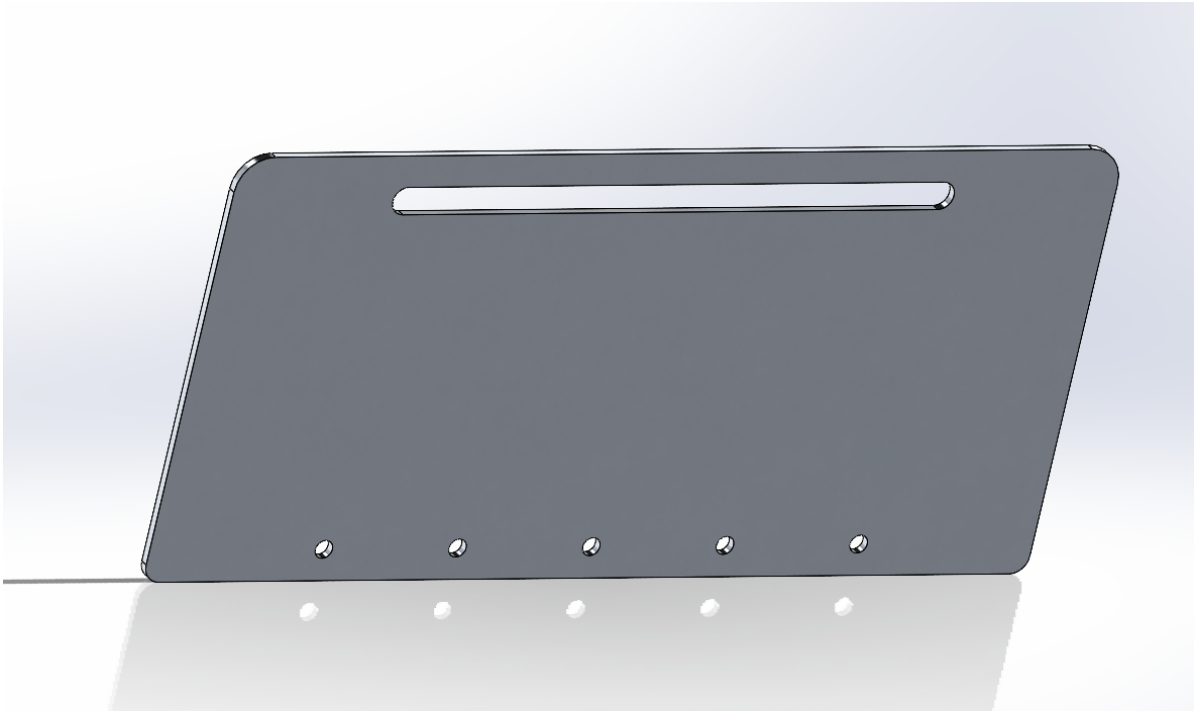

Mounting the ESS to the Bike

The battery is mounted to the bike through the use of clamp mounts and extender brackets. The clamp-mounts attach to the

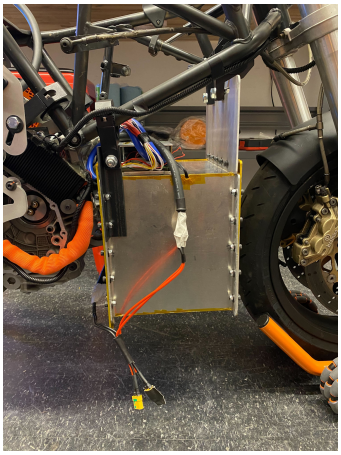

frame of the bike and provide four main bolting holes for the battery to mount to. The extender plates attach to the battery panels, and connect to these clamp-mounts through a bolted joint.

The plate design extends the main battery box vertically to fit the battery in the space under the frame of the bike, and keep it horizontal and level. The reason for keeping the battery horizontal is due to space constraints. Mounting the ESS at an angle would cause it to interfere with the front wheel.

The front extender plate was made of waterjet 6061 aluminum. The rear extenders are steel angle-irons that were made manually on a horizontal band-saw and a drill-press. This temporary mounting system will allow us to get data in a lab setting, but future versions of the battery will be more robust to vibration.

Battery Management System

For the first vehicle prototype, we decided not to go with a custom battery management system, rather an off-the-shelf unit from Battery Hookup. The BMS is a 7s-21s 100A Lithium-Ion BMS that features balancing, overcurrent lockout, overvoltage lockout, undervoltage lockout, an on-board fuse, and temperature monitoring and protection.[8]

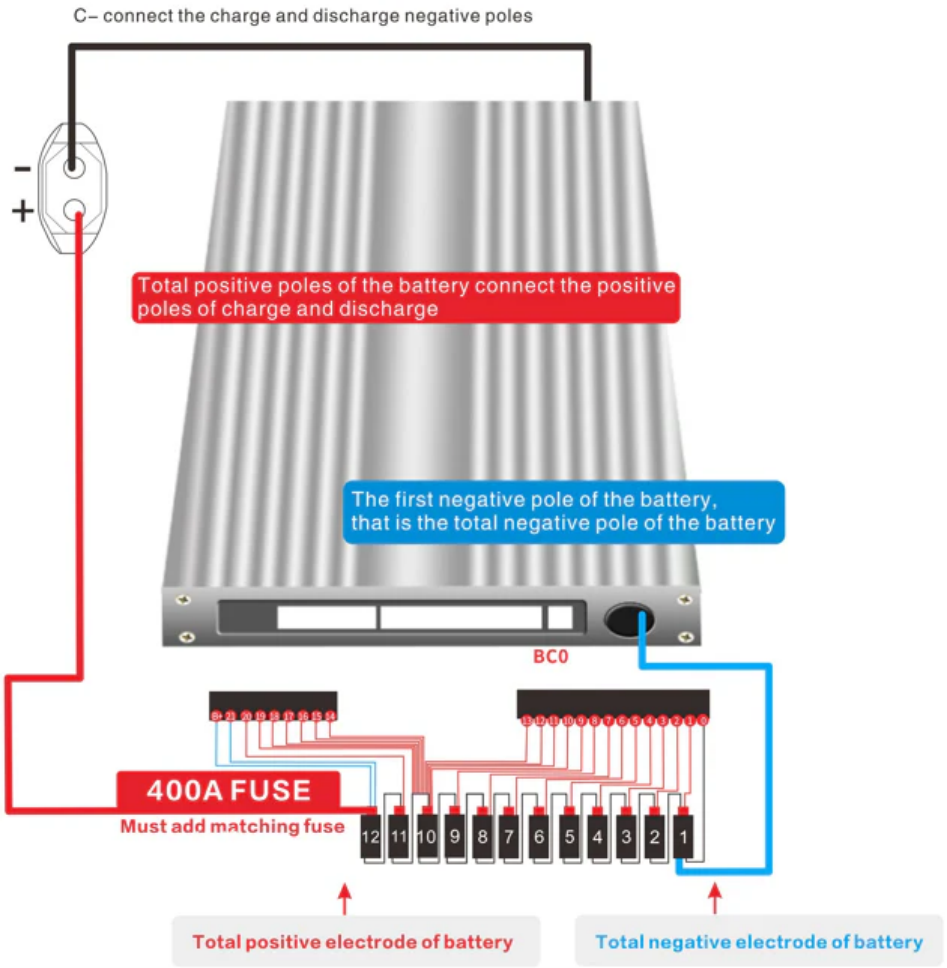

[8] https://batteryhookup.com/products/7s-21s-24v-75v-300a-lithium-ion-bms

All battery management systems use “cell-taps” (wires that go to the positive and negative terminals of cells and are connected to on-board voltage-sensors) to read the individual voltages of cells. Such multi-functional BMS units that are compatible with a wide range of packs have specific wiring diagrams for these cell-taps that depend on the series configuration of the pack. The different configurations allow the BMS to auto-select the number of cells in the pack without asking for direct user input or configuration. The above diagram shows the cell-tap wiring for a 12s configuration. This wiring does not change based on the number of parallel cells, as parallel cells have the same voltage. The BMS is also powered by these cell taps. This specific BMS is always running, even when the main contactor that connects power to the motor controller is shut off. This is something we’d like to improve upon in the future with our own custom BMS that doesn’t need to be constantly drawing power from the battery when the bike is not operational.

The setup of the BMS was straightforward in terms of wiring. We installed cell-taps on the positive and negative side of each series-pair of cells in the battery. These taps were labeled (1s+, 1s-/2s+, 2s-/3s+... and so on) to make connections to the BMS easier. These wires were cut to an appropriate length, and soldered to the included connectors. Then the large blue wire from the BMS was installed on the main negative terminal of the battery, and the black wires connected to the motor controller dc-negative terminal.

Notes from BMS Installation and Precautions

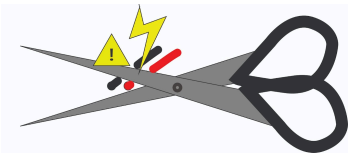

During installation, do not use metal wire strippers or scissors to cut multiple cell taps at the same time, cutting multiple cell taps at the same time will lead to a short circuit between the positive and negative terminal of certain cells in the battery and may lead to a fire.

The BMS itself is configured using a phone bluetooth app, the app is developed by Xiaxiang BMS. There is also a desktop application you can use to configure the BMS that we found lacked required features and control over the BMS.

When connecting cell taps, users should connect the higher number cell taps (i.e. 12s-10s taps) first before the lower cell taps. If this is not done then the BMS will read the incorrect number of cells. The cause for this is unknown, but we think that on startup the BMS reads the highest cell-voltage with reference to batt (-) to determine the number of cells in the pack, and the moment any of the two balance cables is plugged in, the BMS will turn on, which means the higher-voltage cable needs to be plugged in first for the BMS to detect 12s

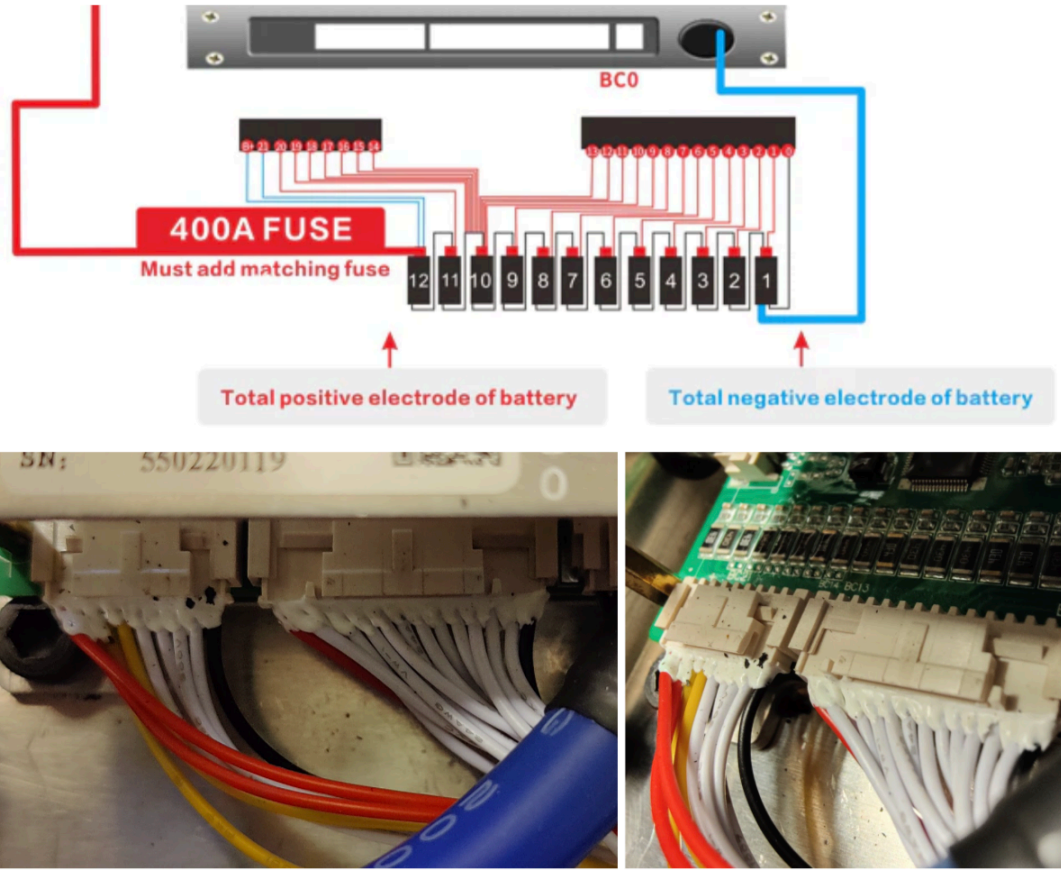

The "SW" port on the side of the BMS is for a switch that users can use to turn on/off the main discharge port; this switch needs to be activated in the BMS app by going to "configuration" and selecting "switch" from the menu options. This then needs to be saved to the BMS for the switch to activate the main contactor.

Testing BMS Power Usage Over Time

One of our biggest concerns with the off-the-shelf BMS was the fact that it remained on constantly while connected to the battery. This, in combination with the fact that there was an on-board bluetooth module for connection and configuration made us worry that the BMS would drain the battery significantly while the vehicle was parked. We ran a quick test by leaving the BMS plugged in overnight and measuring the battery voltage after 24 hours. The total pack voltage drop was less than 0.1V. Further characterization is needed to determine if this is a longer-term problem (if the battery will discharge itself over multiple days) but so far, the voltage drain is small enough to be mostly negligible.

Mechanical Mounting of the BMS

The BMS was mounted to the top of the battery box with bolts. Holes were drilled in the top plate of the battery box while the plate was disassembled from the main pack. The holes were cleaned, the BMS was mounted with bolts, the entire plate was re-insulated with Kapton tape, and then the plate was re-installed on the battery box.

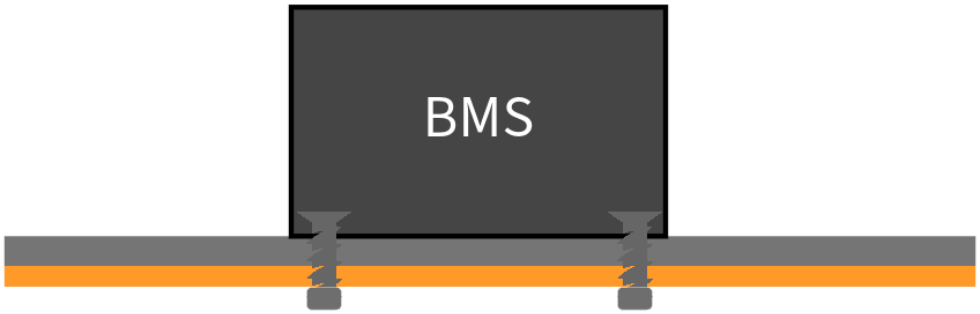

Notes for Future Versions

During the course of our battery pack manufacturing, we encountered various challenges and identified areas for improvement that will guide our future designs. These notes and improvements are crucial for enhancing the overall performance, safety, and functionality of our battery system. Here are the key areas of focus and corresponding improvement notes:

Battery Box

- Consider using steel for the construction of the battery box to enhance its durability and structural integrity.
- Be cautious of galvanic corrosion when different metals, such as steel and aluminum, come into contact with each other.
- Ensure that the chosen aluminum alloy has suitable bending properties to avoid issues encountered with 6061 aluminum.
- Incorporate spring washers to provide additional security and prevent loosening of bolts.
- Implement waterproofing measures by utilizing gaskets, O-rings, and silicone sealant to safeguard the battery components from moisture ingress.
- Apply a waterproof coating to the steel surfaces of the battery box to enhance water resistance. Epoxy coatings are commonly used for this purpose.

Bus Bars

- Opt for water-jet cutting for precise and consistent dimensions of the bus bars.
- Consider nickel plating the bus bars to improve corrosion resistance.
- Reevaluate the thickness of the bus bars, as a 3/16" size may be thicker than necessary.

Battery Management System (BMS)

- Enhance clarity during assembly by labeling the 6+ and 7- connections as the same end (e.g., 6+ and 6+), reducing confusion and ensuring accurate wiring.
- Develop a step-by-step procedure for initializing the BMS, ensuring proper configuration and functionality.

Miscellaneous

- Acknowledge the limitations of the current lithium-ion battery design, which presents certain safety risks and environmental concerns.
- Prioritize future iterations to develop waterproof battery solutions to mitigate safety issues during exposure to rain or other water sources.
- Explore alternative battery chemistries or technologies that are safer and more environmentally friendly.

Acknowledgements

Special thanks to Chris Evagora and MITERS for their help during this project. And to Elijah B. Stanger-Jones, and Fischer J. Moseley for their engineering expertise and advice.