REVISION HISTORY			
REV	DESCRIPTION	DATE	APPROVED

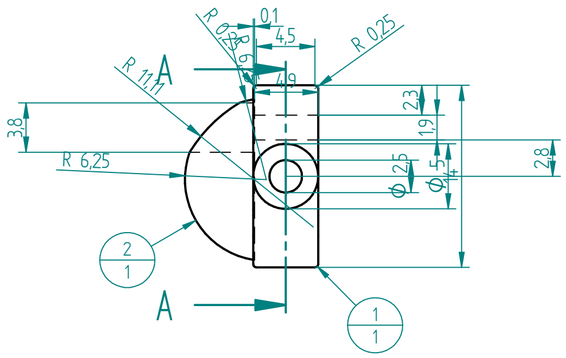

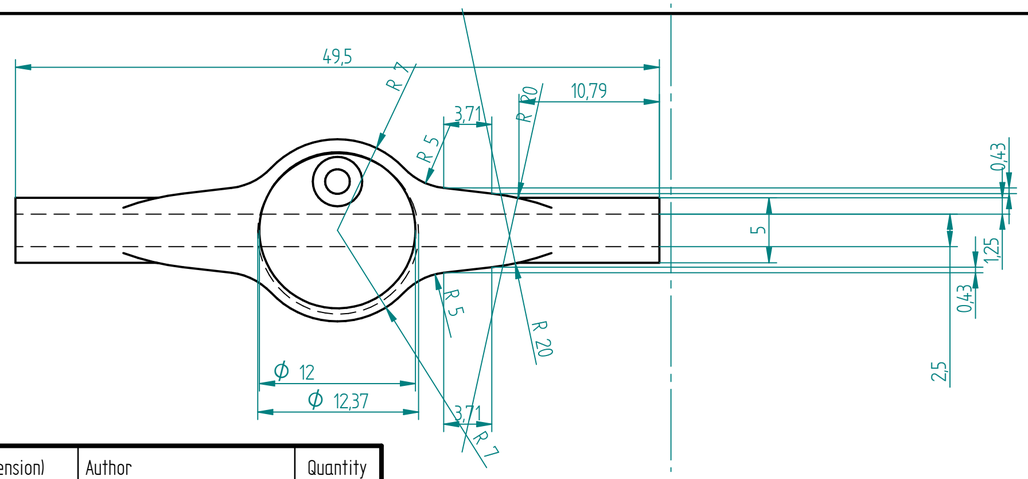

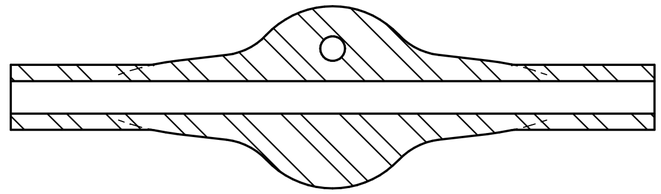

SECTION A–A

Item Number	File Name (no extension)	Author	Quantity
1	Differential 1	user	1
2	Differential 2	user	1

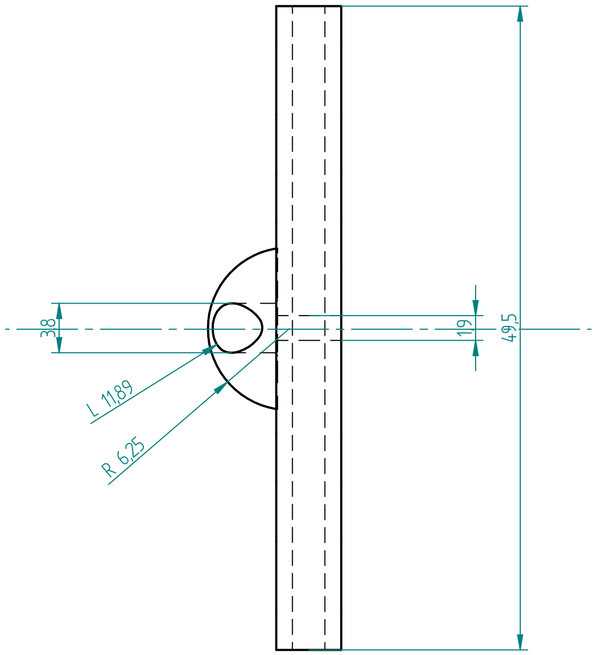

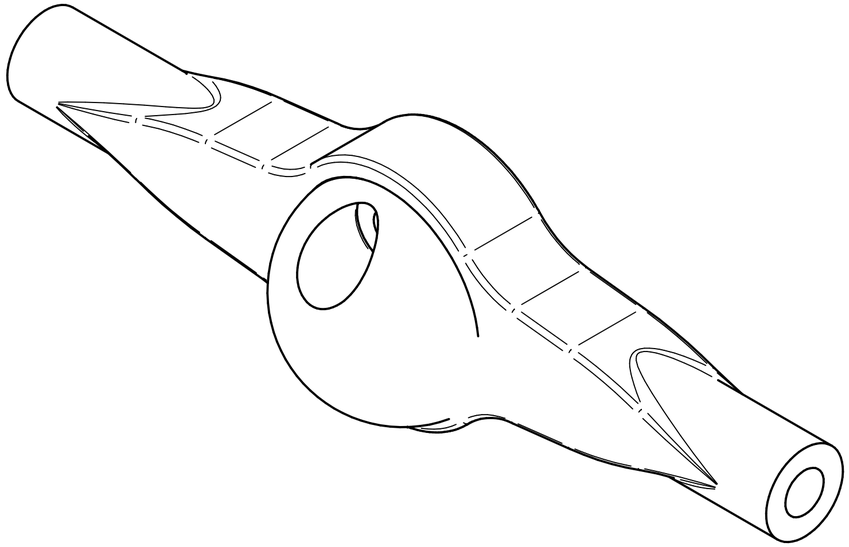

SOLID EDGE ACADEMIC COPY

	NAME	DATE
DRAWN	user	02/13/19
CHECKED		
ENG APPR		
MGR APPR		

UNLESS OTHERWISE SPECIFIED
DIMENSIONS ARE IN MILLIMETERS
ANGLES ±X.X°
2 PL ±X.XX 3 PL ±X.XXX

Solid Edge

TITLE

SIZE A2 | DWG NO | REV

FILE NAME: Differential Assembly.dft

SCALE: | WEIGHT: | SHEET 1 OF 1