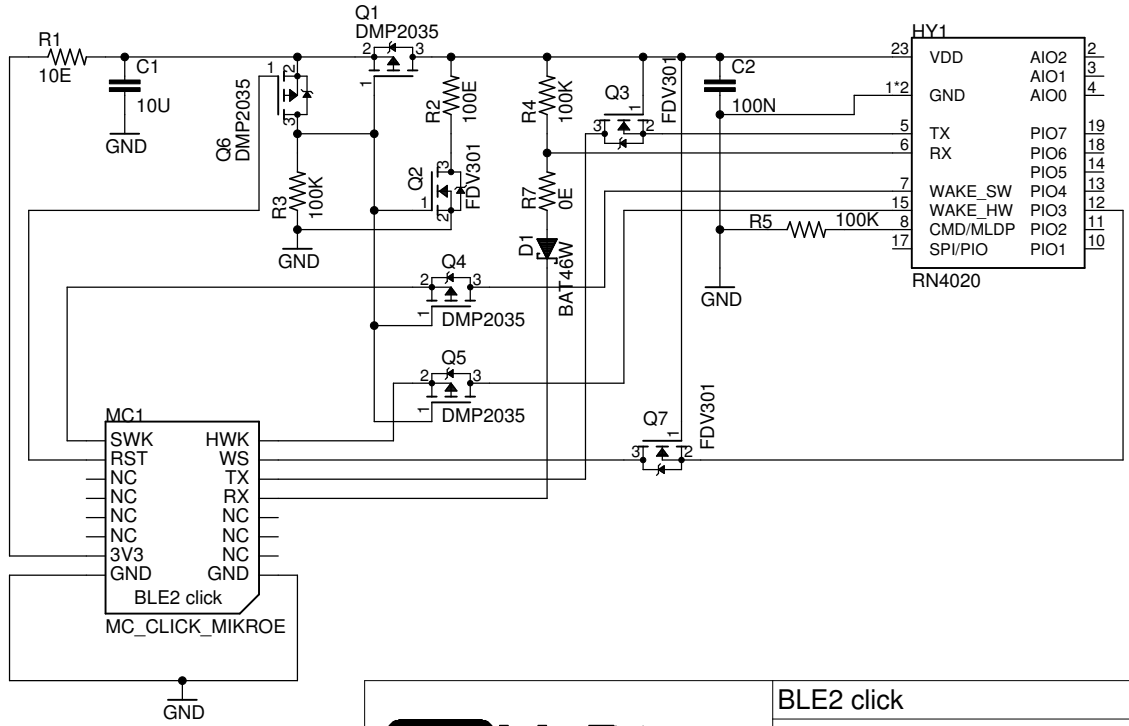

LieBtrau

BLE2 click	
BRD161224	
27/12/16 19:12	
Sheet: 1/1	R00.0x