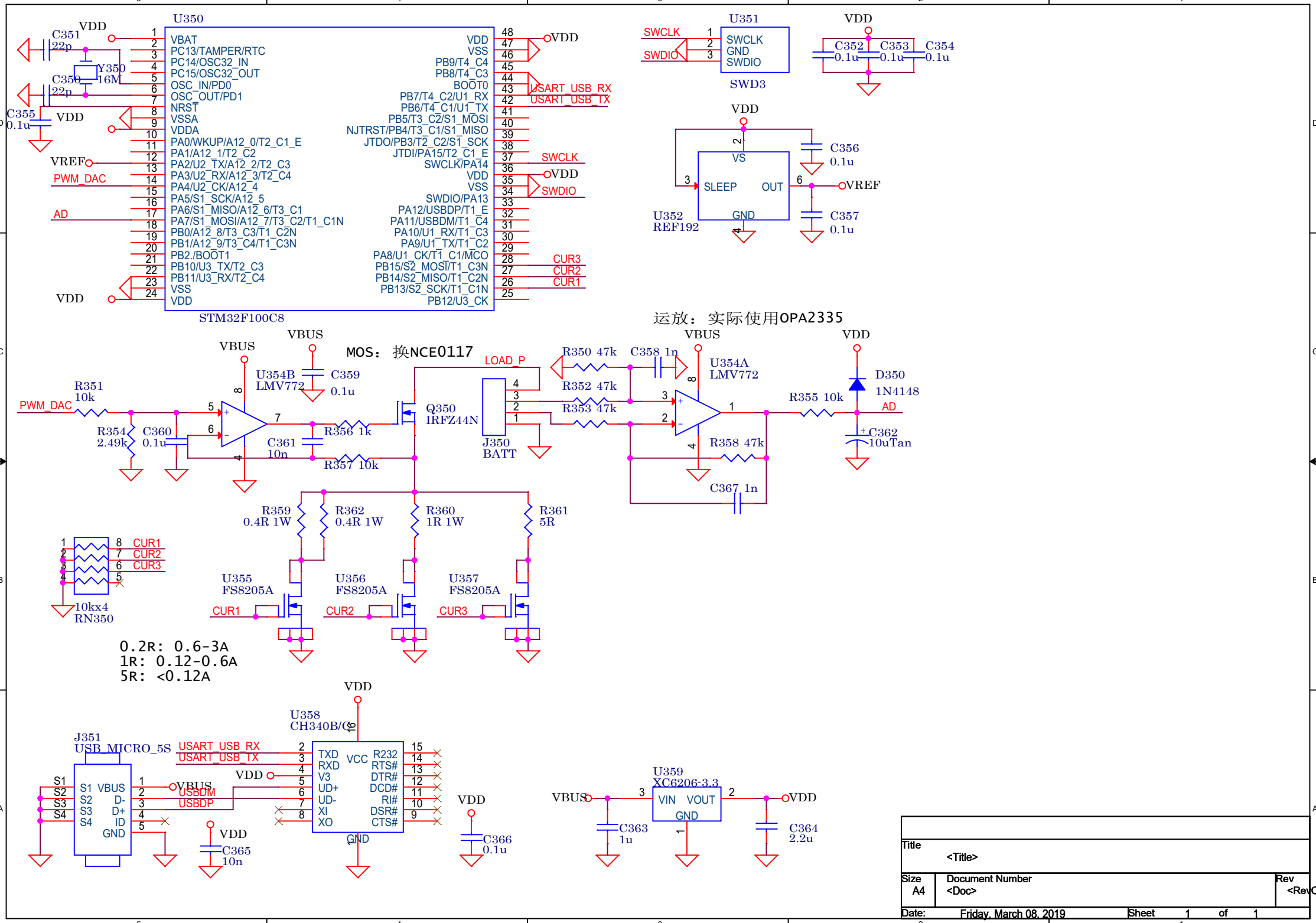

Title	<Title>	
Size A4	Document Number <Doc>	Rev <RevCo
Date: Friday, March 08, 2019	Sheet 1 of 1	