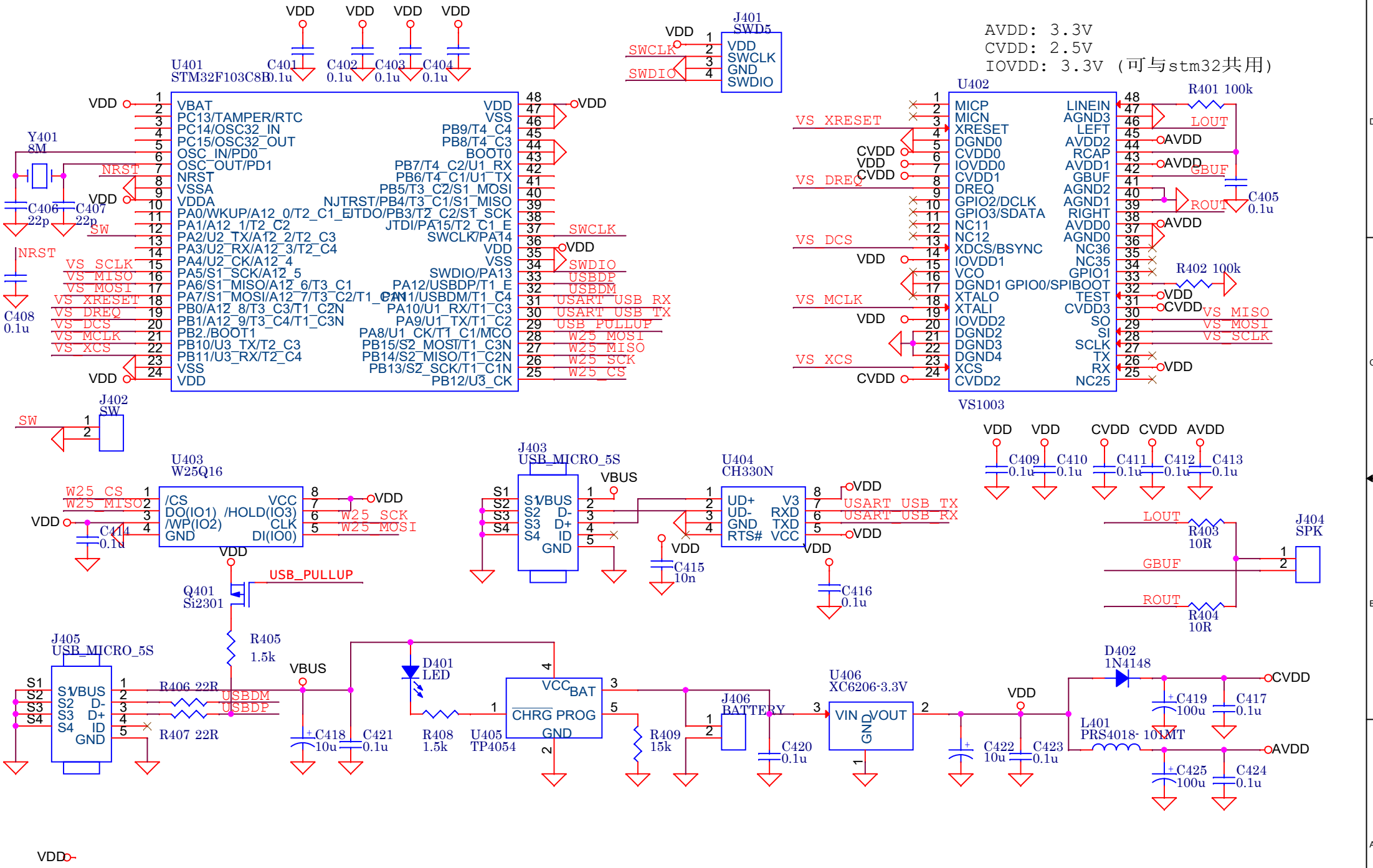

Size	Document Number	Rev
A4	<Doc>	1.0

Date: Thursday, November 08, 2018 Sheet 1 of 1